INTERNATIONAL STANDARD

# ISO/IEC 9314-3

First edition
1990-10-15

**Information processing systems — Fibre distributed Data Interface (FDDI) —**

**Part 3:**
Physical Layer Medium Dependent (PMD)

Reference number
ISO/IEC 9314-3 : 1990 (E)

AVA Documents
Document Sharing Hub

Full document details: ISO_IEC 9314-3_1990

## Contents

Page

Foreword . . . . . vi

Introduction. . . . . vii

1 Scope. . . . . 1

2 Normative references . . . . . 2

3 Definitions. . . . . 2

4 Conventions and abbreviations. . . . . 5

4.1 Conventions . . . . . 5

4.2 Abbreviations. . . . . 5

5 General description . . . . . 6

5.1 Ring Overview . . . . . 6

5.2 Environment . . . . . 9

6 Services. . . . . 9

6.1 PMD-to-PHY services. . . . . 10

6.2 PMD-to-SMT services . . . . . 13

7 Media attachment . . . . . 14

7.1 Media Interface Connector (MIC) . . . . . 15

7.2 MIC intermateability detail. . . . . 20

8 Media signal interface . . . . . 20

8.1 Active output interface . . . . . 20

8.2 Active input interface. . . . . 22

8.3 Station bypass interface . . . . . 23

© ISO/IEC 1990
All rights reserved. No part of this publication may be reproduced or utilized in any form or by any means, electronic or mechanical, including photocopying and microfilm, without permission in writing from the publisher.

International Organization for Standardization
Case postale 56 • CH-1211 Genève 20 • Switzerland

Printed in Switzerland



Documents
Document Sharing Hub

Full document details: ISO_IEC 9314-3_1990

8.4 Station bypass timing definitions . . . . . 23

9 Interface signals . . . . . 26

9.1 Optical Receiver . . . . . 26

9.2 Optical Transmitter . . . . . 28

10 Cable Plant Interface Specification 28

10.1 Cable plant specification . . . . . 28

10.2 Bypassing . . . . . 29

10.3 Connectors and splices . . . . . 30

**Tables**

Table 1 Characteristics of active output interface . . . . 21

Table 2 Characteristics of active input interface . . . . . 24

Table 3 Characteristics of station bypass interface . . . 24

Table 4 Summary of assertion and deassertion requirements . . . . . 28

Table 5 Suggested fibre for a cable plant . . . . . 29

Table 6 Bandwidth and attenuation values . . . . . 29

**Figures**

Figure 1 FDDI links and connections . . . . . 7

Figure 2 FDDI topology example . . . . . 8

Figure 3 Dual attachment PMD services . . . . . 11

Figure 4 Example of Media Interface Connector (MIC) plug . . . . . 15

Figure 5 MIC receptacle - fibre/device . . . . . 16

Figure 6 MIC receptacle - fibre/fibre . . . . . 17

Figure 7 MIC ferrule geometry . . . . . 18

Figure 8 Receptacle keying detail . . . . . 19

Figure 9 Source spectral width and centre wavelength requirements . . . . . 21

Figure 10 Pulse envelope . . . . . 22

AVA Documents
Document Sharing Hub



Full document details: ISO_IEC 9314-3_1990

Figure 11 Expanded pulse envelope . . . . . 23

Figure 12 Station bypass timing characteristics . . . . . 25

Figure 13 Signal detect thresholds and timing . . . . . 27

Figure 14 Minimum dispersion wavelength and slope limits . . . . . 30

Figure 15 Cable plant example . . . . . 31

**Annexes**

Annex A Test methods . . . . . 32

A.1 Active output interface . . . . . 32

A.2 Active input interface . . . . . 33

A.3 Distortion and jitter contributions . . . . . 33

A.4 Distortion and jitter measurements . . . . . 34

A.5 DDJ test pattern for jitter measurements . . . . . 35

Annex B Optical test procedures . . . . . 37

Annex C Alternative cable plant usage . . . . . 38

C.1 Alternative fibre sizes . . . . . 38

C.2 Theoretical connection losses . . . . . 38

C.3 Optical bypass switches . . . . . 39

Table C.1 Alternative fibre types . . . . . 38

Table C.2 Theoretical connection losses for mixed fibre types . . . . . 38

Table C.3 Summary of loss budget remaining . . . . . 39

Annex D Electrical interface considerations . . . . . 40

Figure D.1 Test configuration for dc-coupled components . . . . . 40

Figure D.2 Test configuration for ac-coupled components . . . . . 41

Annex E Example of system jitter allocation . . . . . 42

E.1 Jitter sources . . . . . 42



Documents
Document Sharing Hub

Full document details: ISO_IEC 9314-3_1990

E.2 Jitter calculation example . . . . . 42

Table E.1 System jitter budget example . . . . . 43

Annex F Keying considerations . . . . . 44

F.1 Receptacle keying . . . . . 44

F.2 Plug keying. . . . . 44

F.3 Cabling systems . . . . . 45

Annex G Reference non-precision MIC test plug. . . . . 46

Figure G.1 Reference non-precision MIC plug . . . . . 47

Documents
Document Sharing Hub

Full document details: ISO_IEC 9314-3_1990

## Foreword

ISO (the International Organization for Standardization) and IEC (the International Electrotechnical Commission) together form a system for worldwide standardization as a whole. National bodies that are members of ISO or IEC participate in the development of International Standards through technical committees established by the respective organization to deal with particular fields of technical activity. ISO and IEC technical committees collaborate in fields of mutual interest. Other international organizations, governmental and non-governmental, in liaison with ISO and IEC, also take part in the work.

In the field of information technology, ISO and IEC have established a joint technical committee, ISO/IEC JTC 1. Draft International Standards adopted by the joint technical committee are circulated to national bodies for approval before their acceptance as International Standards. They are approved in accordance with procedures requiring at least 75 % approval by the national bodies voting.

International Standard ISO/IEC 9314-3 was prepared by Joint Technical Committee ISO/IEC JTC 1, *Information technology.*

ISO/IEC 9314-3 consists of the following parts, under the general title *Information processing systems — Fibre distributed Data Interface (FDDI)*

- *Part 1: Token Ring Physical Layer Protocol (PHY)*
- *Part 2: Token Ring Media Access Control MAC*
- *Part 3: Token Ring Physical Layer Medium Dependent (PMD)*

Annexes A to G are for information only.



Documents
Document Sharing Hub

Full document details: ISO_IEC 9314-3_1990

## Introduction

This part of ISO/IEC 9314 on the FDDI token ring physical layer, medium dependent is intended for use in a high-performance multistation network. This protocol is designed to be effective at 100 Mbit/s using a token ring architecture and fibre optics as the transmission medium over distances of several kilometres in extent.

Documents
Document Sharing Hub



Full document details: ISO_IEC 9314-3_1990

This page intentionally left blank

Documents
Document Sharing Hub

Full document details: ISO_IEC 9314-3_1990

# Information processing systems — Fibre distributed Data Interface (FDDI) —

# Part 3:
# Physical Layer Medium Dependent (PMD)

## 1 Scope

This part of ISO/IEC 9314 specifies Physical Layer, Medium Dependent (PMD) requirements for the Fibre Distributed Data Interface (FDDI).

The FDDI provides a high-bandwidth (100 Mbit/s) general-purpose interconnection among computers and peripheral equipment using fibre optics as the transmission medium. The FDDI may be configured to support a sustained transfer rate of approximately 80 Mbit/s (10 Mbyte/s). It may not meet the response time requirements of all unbuffered high-speed devices. The FDDI establishes the connection among many FDDI nodes (stations) distributed over distances of several kilometres in extent. Default values for FDDI were calculated on the basis of 1 000 physical connections and a total fibre path length of 200 km.

The FDDI consists of

(a) A Physical Layer (PL) which is divided into two sublayers:

(1) A Physical Layer, Medium Dependent (PMD), which provides the digital baseband point-to-point communication between nodes in the FDDI network. PMD shall provide all services necessary to transport a suitably coded digital bit stream from node to node. PMD specifies the point of interconnection requirements for conforming FDDI stations and cable plants at both sides of the Media Interface Connector (MIC). PMD includes the following:

- The optical power budgets for cable plants using 62,5/125 µm fibre optic cables and optical bypass switches.
- The MIC receptacle mechanical mating requirements including the keying features.
- The 62,5/125 µm fibre optic cable requirements.
- The services provided by PMD to PHY and SMT.

(2) A Physical Layer Protocol (PHY), which provides connection between PMD and the Data Link Layer (DLL). PHY establishes clock synchronization with the upstream code-bit data stream and decodes this incoming code-bit stream into an equivalent symbol stream for use by the higher layers. PHY provides encoding and decoding between data and control indicator symbols and code bits, medium conditioning and initializing, the synchronization of incoming and outgoing code-bit clocks, and the delineation of octet boundaries as required for the transmission of information to or



AVA Documents Document Sharing Hub

Full document details: ISO_IEC 9314-3_1990

from higher layers. Information to be transmitted on the interface medium is encoded by the PHY into a grouped transmission code.

(b) A Data Link Layer (DLL), which controls the accessing of the medium and the generation and verification of frame check sequences to ensure the proper delivery of valid data to the other layers. DLL also concerns itself with the generation and recognition of device addresses and the peer-to-peer associations within the FDDI network. For the purposes of this part of ISO/IEC 9314, references to DLL are made in terms of the Media Access Control (MAC) entity, which is the lowest sublayer of DLL.

(c) A Station Management (SMT)[1] which provides the control necessary at the node level to manage the processes underway in the various FDDI layers such that a node may work co-operatively on a ring. SMT provides services such as control of configuration management, fault isolation and recovery, and scheduling procedures.

This part of ISO/IEC 9314 is a supporting document to ISO/IEC 9314-1 which should be read in conjunction with it.

The SMT document should be consulted for information pertaining to supported FDDI node and network configurations.

ISO/IEC 9314 specifies the interfaces, functions, and operations necessary to insure interoperability between conforming FDDI implementations. This part of ISO/IEC 9314 is a functional description. Conforming implementations may employ any design technique which does not violate interoperability.

## 2 Normative references

The following standards contain provisions which, through reference in this text, constitute provisions of this part of ISO/IEC 9314. At the time of publication, the editions indicated were valid. All standards are subject to revision, and parties to agreements based on this part of ISO/IEC 9314 are encouraged to investigate the possibility of applying the most recent editions of the standards listed below. Members of IEC and ISO maintain registers of currently valid International Standards.

ISO 9314-1: 1989, *Information processing systems - Fibre Distributed Data Interface (FDDI) - Part 1: Token Ring Physical Layer Protocol (PHY).*

ISO 9314-2: 1989, *Information processing systems - Fibre Distributed Data Interface (FDDI) - Part 2: Token Ring Media Access Control (MAC).*

## 3 Definitions

For the purposes of this part of ISO/IEC 9314, the following definitions apply. Other parts of ISO/IEC 9314, e.g., MAC and PHY, may contain additional definitions of interest.

**3.1 attenuation:** Level of optical power loss, expressed in decibels.

**3.2 average power:** The optical power measured using an average reading power meter when the FDDI station is transmitting a stream of Halt symbols.

---

[1] SMT will form the subject of a future part of ISO/IEC 9314.



Documents
Document Sharing Hub

Full document details: ISO_IEC 9314-3_1990

**3.3 bypass:** The ability of a station to isolate itself optically from the FDDI network while maintaining the continuity of the cable plant.

**3.4 centre wavelength:** The average of the two wavelengths measured at the half amplitude points of the power spectrum.

**3.5 code bit:** The smallest signalling element used by the Physical Layer for transmission on the medium.

**3.6 concentrator:** An FDDI node that has additional PHY/PMD entities beyond those required for its own attachment to an FDDI network. These additional PHY/PMD entities are for the attachment of other FDDI nodes (including other concentrators) in a tree topology.

**3.7 connector plug:** A device used to terminate an optical conductor(s) cable.

**3.8 connector receptacle:** The fixed or stationary half of a connection that is mounted on a panel/bulkhead. Receptacles mate with plugs.

**3.9 counter-rotating:** An arrangement whereby two signal paths, one in each direction, exist in a ring topology.

**3.10 dual attachment concentrator:** A concentrator that offers two attachments to the FDDI network which are capable of accommodating a dual (counter-rotating) ring.

**3.11 dual attachment station:** A station that offers two attachments to the FDDI network which are capable of accommodating a dual (counter-rotating) ring.

**3.12 dual ring (FDDI dual ring):** A pair of counter-rotating logical rings.

**3.13 entity:** An active service or management element within an Open Systems Interconnection (OSI) layer, or sublayer.

**3.14 extinction ratio:** The ratio of the low, or off optical power level ($P_L$) to the high, or on optical power level ($P_H$) when the station is transmitting a stream of Halt symbols.

$$\text{Extinction ratio (\%)} = (P_L/P_H) \times 100$$

**3.15 fibre:** Dielectric material that guides light; waveguide.

**3.16 fibre optic cable:** A cable containing one or more optical fibres.

**3.17 interchannel isolation:** The ability to prevent undesired optical energy from appearing in one signal path as a result of coupling from another signal path; cross talk.

**3.18 jitter, data dependent (DDJ):** Jitter that is related to the transmitted symbol sequence. DDJ is caused by the limited bandwidth characteristics and imperfections in the optical channel components. DDJ results from non-ideal individual pulse responses and from variation in the average value of the encoded pulse sequence which may cause base-line wander and may change the sampling threshold level in the receiver.

**3.19 jitter, duty cycle distortion (DCD):** Distortion usually caused by propagation delay differences between low-to-high and high-to-low transitions. DCD is manifested as a pulse width distortion of the nominal baud time.



AVA Documents
Document Sharing Hub
Full document details: ISO_IEC 9314-3_1990

**3.20 jitter, random (RJ):** RJ is due to thermal noise and may be modelled as a Gaussian process. The peak-peak value of RJ is of a probabilistic nature and thus any specific value requires an associated probability.

**3.21 logical ring:** The set of MACs serially connected to form a single ring.

**3.22 media interface connector (MIC):** A mated connector pair that provides an attachment between an FDDI node and a fibre optic cable plant. The MIC consists of two parts; a MIC plug and a MIC receptacle.

**3.23 MIC plug:** The male part of the MIC which terminates a fibre optical cable.

**3.24 MIC receptacle:** The female part of the MIC which is contained in an FDDI node.

**3.25 network (FDDI network):** A collection of FDDI nodes interconnected to form a trunk, or a tree, or a trunk with multiple trees. This topology is sometimes called a dual ring of trees.

**3.26 node:** A generic term applying to any FDDI ring attachment (station or concentrator).

**3.27 numerical aperture (NA):** The sine of the radiation or acceptance half angle of an optical fibre, multiplied by the refractive index of the material in contact with the exit or entrance face.

**3.28 optical fall time:** The time interval for the falling edge of an optical pulse to transition from 90 % to 10 % of the pulse amplitude.

**3.29 optical reference plane:** The plane that defines the optical boundary between the MIC Plug and the MIC Receptacle.

**3.30 optical rise time:** The time interval for the rising edge of an optical pulse to transition from 10 % to 90 % of the pulse amplitude.

**3.31 physical connection:** The full-duplex physical layer association between adjacent PHY entities (in concentrators or stations) in an FDDI network, i.e., a pair of Physical Links.

**3.32 physical link:** The simplex path (via PMD and attached medium) from the transmit function of one PHY entity to the receive function of an adjacent PHY entity (in concentrators or stations) in an FDDI network.

**3.33 primitive:** An element of the services provided by one entity to another.

**3.34 receiver (optical):** An opto-electronic circuit that converts an optical signal to an electrical logic signal.

**3.35 ring:** A set of stations wherein information is passed sequentially between stations, each station in turn examining or copying the information, finally returning it to the originating station. In FDDI usage, the term "ring" or "FDDI ring" refers to the a dual (counter-rotating) ring.

**3.36 services:** The services provided by one entity to another. Data services are provided to a higher layer entity; management services are provided to a management entity in the same or another layer.

**3.37 single attachment concentrator:** A concentrator that offers one attachment to the FDDI network.



AVA Documents
Document Sharing Hub

Full document details: ISO_IEC 9314-3_1990

**3.38 single attachment station:** A station that offers one attachment to the FDDI network.

**3.39 spectral width, full width half maximum (FWHM):** The absolute difference between the wavelengths at which the spectral radiant intensity is 50,0 % of the maximum power.

**3.40 station:** An addressable node on an FDDI network capable of transmitting, repeating, and receiving information. A station has exactly one SMT and at least one MAC, one PHY, and one PMD.

**3.41 transmitter (optical):** An opto-electronic circuit that converts an electrical logic signal to an optical signal.

**3.42 trunk:** A physical loop topology, either open or closed, employing two optical fibre signal paths, one in each direction (i.e., counter-rotating), forming a sequence of peer connections between FDDI nodes. When the trunk forms a closed loop it is sometimes called a trunk ring.

**3.43 tree:** A physical topology consisting of a hierarchy of master-slave connections between a concentrator and other FDDI nodes (including subordinate concentrators).

# 4 Conventions and abbreviations

## 4.1 Conventions

The terms SMT, MAC, PHY, and PMD, when used without modifiers, refer specifically to the local instances of these entities.

Low lines (e.g., control_action) are used as a convenience to mark the name of signals, functions, and the like, which might otherwise be misinterpreted as independent individual words if they were to appear in text.

The use of a period (e.g., PM_UNITDATA.request) is equivalent to the use of low lines except that a period is used as an aid to distinguish modifier words appended to an antecedent expression.

The use of a colon (e.g., N:PM_UNITDATA.request) distinguishes between two or more instances of the same signal where N designates the other source/destination entity.

## 4.2 Abbreviations

| | |
|---|---|
| AII | Active Input Interface |
| AOI | Active Output Interface |
| ANS_Max | Maximum acquisition time (no signal) |
| AS_Max | Maximum acquisition time (signal) |
| BER | Bit Error Rate |
| BERT | Bit Error Rate Tester |
| DCD | Duty Cycle Distortion (jitter) |
| DDJ | Data Dependent Jitter |
| FOTP | Fibre Optic Test Procedure |
| FWHM | Full Width Half Maximum |
| I_Max | Maximum switching insertion/deinsertion time |
| LS_Max | Maximum line state change time |
| MIC | Media Interface Connector |
| MI_Max | Maximum media interruption time |
| NA | Numerical Aperture |
| NRZI | Non Return to Zero, Invert on ones |

AVA Documents
Document Sharing Hub



Full document details: ISO_IEC 9314-3_1990

| | |
|---|---|
| RJ | Random Jitter |
| SAE | Static Alignment Error (clock offset error) |
| $T_{DD}$ | Difference delay time |
| $T_{MI}$ | Media interruption time |
| $T_{OS}$ | Optical switching speed |
| $T_{SI}$ | Switching insertion/deinsertion time |

# 5 General description

## 5.1 Ring Overview

A ring consists of a set of stations logically connected as a serial string of stations and transmission media to form a closed loop. Information is transmitted sequentially, as a stream of suitably encoded symbols, from one station to the next. Each station generally regenerates and repeats each symbol and serves as the means for attaching one or more devices to the ring for the purpose of communicating with other devices on the ring. The method of actual physical attachment to the FDDI ring may vary and is dependent on specific application requirements as described in subsequent paragraphs.

The basic building block of an FDDI ring is a physical connection as shown in figure 1. A physical connection consists of the Physical Layers (each composed of a PMD and a PHY entity) of two stations that are connected over the transmission medium by a Primary Link and a Secondary Link. A Primary Link consists of an output, called Primary Out, of a Physical Layer, communicating over a Primary medium to the input, called Primary In, of a second Physical Layer. The Secondary Link consists of the output, called Secondary Out, of the second Physical Layer communicating over a Secondary medium to the input, called Secondary In, of the first Physical Layer. Physical connections may be subsequently logically connected within stations, via attached MACs or other means, to create the network. As such, the function of each station is implementer-defined and is determined by the specific application or site requirements.

Two classes of stations are defined: dual (attachment) and single (attachment). FDDI trunk rings may be composed only of dual attachment stations which have two PMD entities (and associated PHY entities) to accommodate the dual ring. Concentrators provide additional PMD entities beyond those required for their own attachment to the FDDI network, for the attachment of single attachment stations which have only one PMD and thus cannot directly attach to the FDDI trunk ring. A dual attachment station, or one-half of it, may be substituted for a single attachment station in attaching to a concentrator. The FDDI network consists of all attached stations.

The example of figure 2 shows the concept of multiple physical connections used to create logical rings. As shown, the logical sequence of MAC connections is stations 1, 3, 5, 8, 9, 10, and 11. Stations 2, 3, 4, and 6 form an FDDI trunk ring. Stations 1, 5, 7, 10, and 11 are attached to this ring by lobes branching out from the stations that form it. Stations 8 and 9 are in turn attached by lobes branching out from station 7. Stations 2, 4, 6, and 7 are concentrators, serving as the means for attaching multiple stations to the FDDI ring. Concentrators may or may not have MAC entities and station functionality. The concentrator examples of figure 2 do not show any MACs although their presence is implied by the designation of these concentrators as stations.

Connection to the physical medium as established by PMD is controlled by the station insertion and removal algorithms of Station Management (SMT) which are beyond the scope of this part of ISO/IEC 9314.



Documents
Document Sharing Hub
Full document details: ISO_IEC 9314-3_1990

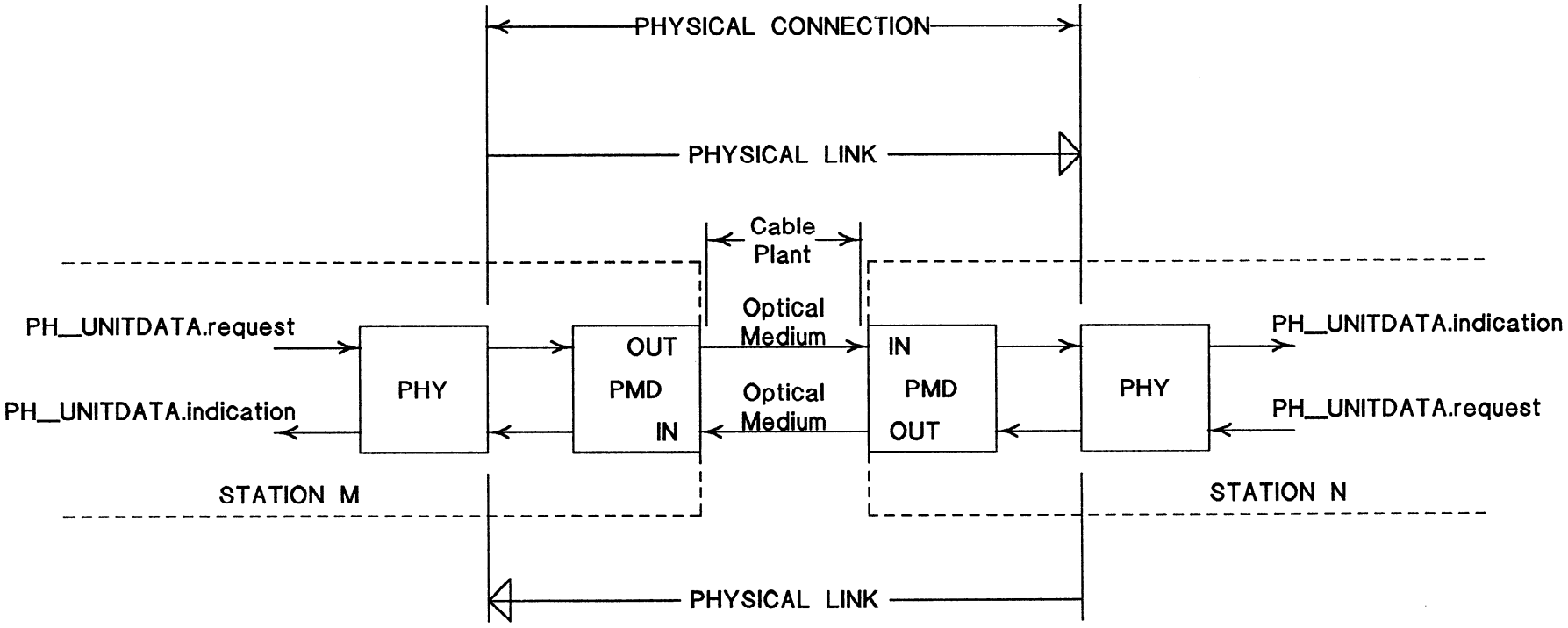


**Figure 1 - FDDI links and connections**



Full document details: ISO_IEC 9314-3_1990

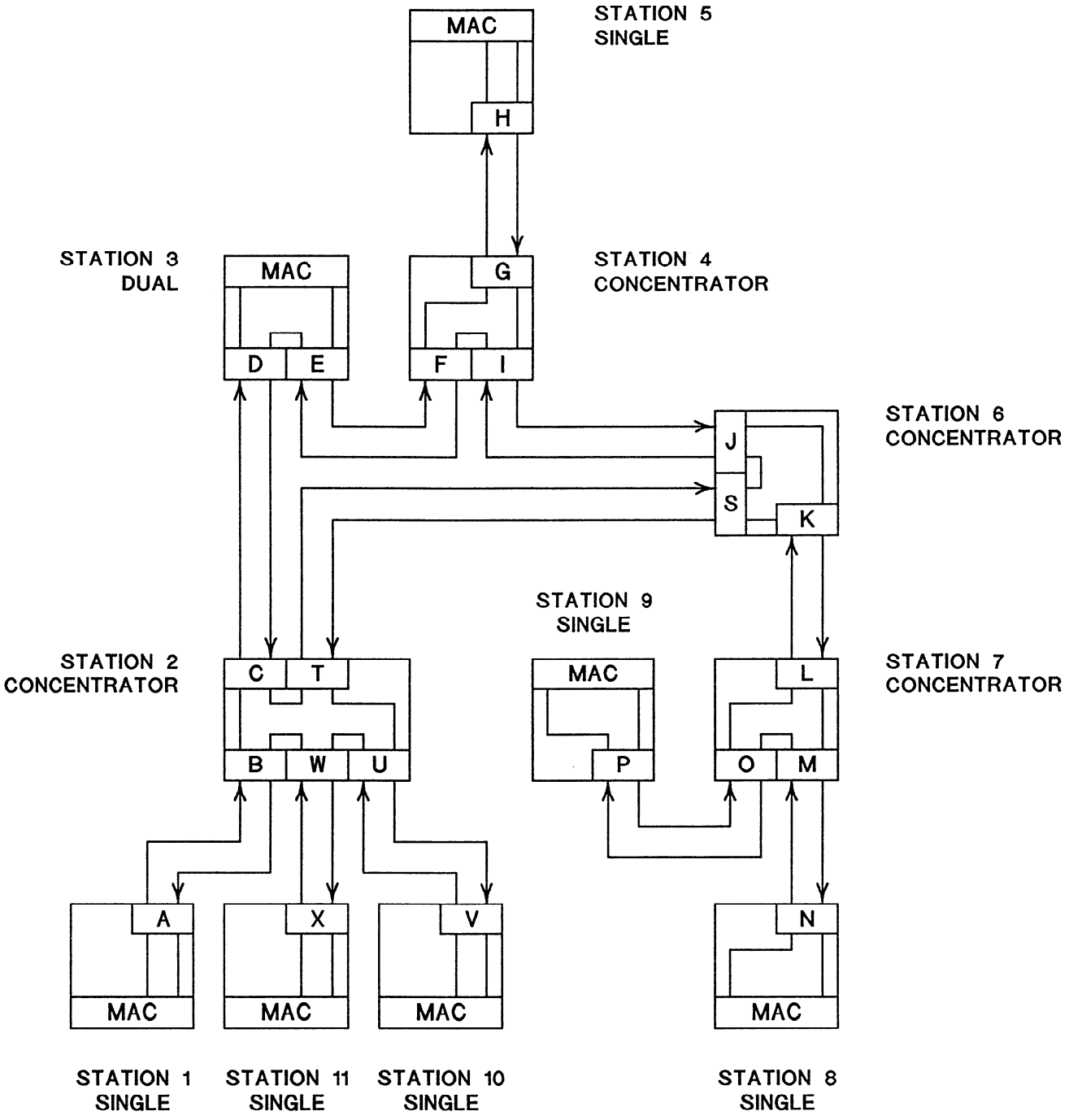


Figure 2 - FDDI topology example



Documents
Document Sharing Hub
Full document details: ISO_IEC 9314-3_1990

### 5.2 Environment

As shown in figure 2 and as described 5.1, an FDDI network consists of a virtually unlimited number of connected stations. SMT establishes the physical connections between stations, and the correct internal station configurations, to create an FDDI network.

It is understood that restrictions of the transmission media as defined (i.e., dynamic range and bandwidth) may place limits on realizable physical configurations. Trade-offs may be made within specific site applications, such as distance versus optical bypassing, consistent with these limitations. While not intended to be limiting, the FDDI has been defined to serve three major application environments including:

#### 5.2.1 Data centre environment

The data centre environment is characterized by a relatively few number of stations, typically mainframe computers and peripheral equipment, where a high degree of reliability and fault tolerance is required. The FDDI network in a data centre environment is often typically comprised of a preponderance of dual stations with relatively few, if any, concentrators. In this environment, it is desirable that two stations maintain unimpaired operation even under the circumstance where up to four intervening stations are powered down, thereby causing their optical bypass switches to be in the active connection path between the communicating stations. This environment assumes a total fibre length not exceeding 400 m between two communicating stations.

#### 5.2.2 Office/building environment

The office/building environment is characterized both by a relatively large number of single attachment stations (typically smaller computers, communications concentrators, workstations, and peripherals) and by a radial wiring scheme to connect these stations. Moreover, the stations are frequently powered down by their users. Concentrators, which are typically always powered on, are often used to attach these stations to the FDDI network because they facilitate radial wiring and because concentrators allow any set of the single attachment stations to be without power.

#### 5.2.3 Campus environment

The campus environment is characterized by stations distributed across multiple buildings where links of up to 2 km may be encountered. Such a distance requirement is expected to be uncommon and would not allow the bypass techniques that are useful in the data centre environment. This application is typically used for trunk lines between office/building and data centre environments.

## 6 Services

This clause specifies the services provided by the PMD. These services do not imply any particular implementation or any interface. Services described are

(a) PMD services provided to the local Physical Protocol (PHY) entity (indicated by PM_ prefix).

(b) PMD services provided to the local Station Management (SMT) entity (indicated by SM_PM_ prefix).



AVA Documents Document Sharing Hub

Full document details: ISO_IEC 9314-3_1990