INTERNATIONAL STANDARD

ISO/IEC 9314-8

First edition
1998-08

Information technology –
Fibre Distributed Data Interface (FDDI) –

Part 8:
Media Access Control-2 (MAC-2)

Reference number
ISO/IEC 9314-8:1998(E)

Documents
Document Sharing Hub

Full document details: ISO_IEC 9314-8_1998

Documents
Document Sharing Hub

Full document details: ISO_IEC 9314-8_1998

INTERNATIONAL STANDARD

ISO/IEC 9314-8

First edition
1998-08

Information technology –
Fibre Distributed Data Interface (FDDI) –

Part 8:
Media Access Control-2 (MAC-2)

© ISO/IEC 1998

All rights reserved. Unless otherwise specified, no part of this publication may be reproduced or utilized in any form or by any means, electronic or mechanical, including photocopying and microfilm, without permission in writing from the publisher.

ISO/IEC Copyright Office • Case postale 56 • CH-1211 Genève 20 • Switzerland

CODE PRIX
PRICE CODE XA

Pour prix, voir catalogue en vigueur
For price, see current catalogue

Documents
Document Sharing Hub

Full document details: ISO_IEC 9314-8_1998

CONTENTS

Page

FOREWORD v

INTRODUCTION vi

Clause

1 Scope 1

2 Normative references 3

3 Definitions 4

4 Conventions and abbreviations 7
- 4.1 Conventions 7
  - 4.1.1 Addressing 7
  - 4.1.2 Timing values and timers 7
- 4.2 Abbreviations 8

5 General description 10

6 Services 11
- 6.1 MAC-to-LLC services 12
  - 6.1.1 MA_UNITDATA.request 12
  - 6.1.2 MA_UNITDATA.indication 14
  - 6.1.3 MA_UNITDATA_STATUS.indication 16
  - 6.1.4 MA_TOKEN.request 16
- 6.2 MAC-to-PHY services 17
  - 6.2.1 PH_UNITDATA.request 18
  - 6.2.2 PH_UNITDATA.indication 18
  - 6.2.3 PH_INVALID.indication 18
- 6.3 MAC-to-H-MUX Services 19
  - 6.3.1 HM_MODE.indication 19
  - 6.3.2 HP_UNITDATA.request 20
  - 6.3.3 HP_UNITDATA.indication 20
  - 6.3.4 HP_INVALID.indication 21
  - 6.3.5 HP_MODE.request 21
- 6.4 MAC-to-SMT services 22
  - 6.4.1 SM_MA_INITIALIZE_PROTOCOL.request 22
  - 6.4.2 SM_MA_CONTROL.request 24
  - 6.4.3 SM_MA_STATUS.indication 26
  - 6.4.4 SM_MA_UNITDATA.request 28
  - 6.4.5 SM_MA_UNITDATA.indication 29
  - 6.4.6 SM_MA_UNITDATA_STATUS.indication 31
  - 6.4.7 SM_MA_TOKEN.request 31

7 Facilities 32
- 7.1 Symbol set 32
  - 7.1.1 Line state symbols 32
  - 7.1.2 Control symbols 33
  - 7.1.3 Data Quartets (0-F) 34
  - 7.1.4 Violation symbol (V) 34

Documents
Document Sharing Hub

Full document details: ISO_IEC 9314-8_1998

7.2 Protocol Data Units 34
7.2.1 Token 35
7.2.2 Frame 35
7.3 Fields 36
7.3.1 Preamble (PA) 36
7.3.2 Starting Delimiter (SD) 36
7.3.3 Frame Control (FC) 36
7.3.4 Destination and source addresses 39
7.3.5 Routing Information (RI) field 42
7.3.6 Information (INFO) field 42
7.3.7 Frame Check Sequence (FCS) 43
7.3.8 Ending Delimiter (ED) 44
7.3.9 Frame Status (FS) 45
7.4 Timers 46
7.4.1 Token-Holding Timer (THT) 46
7.4.2 Valid-Transmission Timer (TVX) 46
7.4.3 Token-Rotation Timer (TRT) 47
7.4.4 Late Counter (Late_ct) 48
7.4.5 Token Counter (Token_ct) 48
7.5 Frame counts 48
7.5.1 Frame_ct 48
7.5.2 Error_ct 48
7.5.3 Lost_ct 48
7.5.4 Copied_ct 49
7.5.5 Transmit_ct 49
7.5.6 Not_Copied_ct 49

8 Operation 49
8.1 Overview 49
8.1.1 Frame transmission 50
8.1.2 Token transmission 50
8.1.3 Frame stripping 50
8.1.4 Ring scheduling 51
8.1.5 Ring monitoring 53
8.2 Structure 55
8.3 Receiver 56
8.3.1 Token and frame validity criteria 57
8.3.2 State R0: LISTEN 58
8.3.3 State R1: AWAIT_SD (Await Starting Delimiter) 58
8.3.4 State R2: RC_FR_CTRL (Receive Frame Control Field) 59
8.3.5 State R3: RC_FR_BODY (Receive Frame Body) 60
8.3.6 State R4: RC_FR_STATUS (Receive Frame Status) 62
8.3.7 State R5: CHECK_TK (Check Token) 64
8.4 Transmitter 65
8.4.1 State T0: TX_IDLE (Transmitter Idle) 65
8.4.2 State T1: REPEAT (Repeat) 67
8.4.3 State T2: TX_DATA (Transmit data) 69
8.4.4 State T3: ISSUE_TK (Issue Token) 71
8.4.5 State T4: CLAIM_TK (Claim Token) 72
8.4.6 State T5: TX_BEACON (Transmit Beacon) 73

Documents
Document Sharing Hub
Full document details: ISO_IEC 9314-8_1998

Annex A (informative) Addressing 83
A.1 General structure 83
A.2 Administration of addresses 83
A.2.1 Locally administered addresses 84
A.2.2 Universally administered addresses 84
A.3 Transmission order 85
A.3.1 Representation of addresses 85
A.4 Group addresses 86
A.4.1 Broadcast address 86
A.4.2 Assignment of group addresses for use in standards 87
A.4.3 Group addresses assigned for use in FDDI 87
A.5 Source routing addressing 87
A.6 References 87

Annex B (informative) Frame Check Sequence 88
B.1 Description 88
B.2 Generation of the FCS 88
B.3 Checking the FCS 89
B.4 Implementation 89
B.5 Related standards 91

Annex C (informative) Bridging 92
C.1 Bridge architectures 92
C.2 Destination Address recognition 93
C.3 Indicator setting 93
C.4 Stripping 93

Annex D (informative) Elements of timer calculation 95

Annex E (informative) Bibliography 98

Tables

Table 1 – Interpretation of FC field 59

Figures

Figure 1 – FDDI structure 3

Figure 2 – Token ring logical configuration example 11

Figure 3 – MAC Receiver state diagram 75

Figure 4 – MAC Transmitter state diagram 79

Figure B.1 – FCS implementation example 90

Documents
Document Sharing Hub

Full document details: ISO_IEC 9314-8_1998

FOREWORD

ISO (the International Organization for Standardization) and IEC (the International Electrotechnical Commission) form the specialized system for worldwide standardization. National bodies that are members of ISO or IEC participate in the development of International Standards through technical committees established by the respective organization to deal with particular fields of technical activity. ISO and IEC technical committees collaborate in fields of mutual interest. Other international organizations, governmental and non-governmental, in liaison with ISO and IEC, also take part in the work.

In the field of information technology, ISO and IEC have established a joint technical committee, ISO/IEC JTC 1. Draft International Standards adopted by the joint technical committee are circulated to national bodies for voting. Publication as an International Standard requires approval by at least 75 % of the national bodies casting a vote.

International Standard ISO/IEC 9314-8 was prepared by Joint Technical Committee ISO/IEC JTC 1 *Information technology*, Subcommittee SC 25*, Interconnection of information technology equipment.*

ISO/IEC 9314 consists of the following parts, under the general title *Information technology – Fibre Distributed Data Interface (FDDI):*

- *Part 1: Token Ring Physical Layer Protocol (PHY) (1989)*
- *Part 2: Token Ring Media Access Control (MAC) (1989)*
- *Part 3: Physical Layer Medium Dependent (PMD) (1990)*
- *Part 4: Single Mode Fibre Physical Layer Medium Dependent (SMF-PMD)* [1)]
- *Part 5: Hybrid Ring Control (HRC) (1995)*
- *Part 6: Station Management (SMT)*
- *Part 7: Physical Layer Protocol (PHY-2)*
- *Part 8: Media Access Control-2 (MAC-2)*
- *Part 9: Low-Cost Fibre – Physical Medium Dependent (LCF-PMD) (under consideration)*
- *Part 10: Token Ring Twisted Pair Physical layer Medium Dependent (TP-PMD) (under consideration)*
- *Part 13: Conformance Test Protocol Implementation Conformance Statement Proforma (CT-PICS)*
- *Part 20: Physical Medium Dependent Conformance Testing (PMD-ATS) (under consideration)*
- *Part 21: Physical Layer Protocol Conformance Testing (PHY-ATS) (under consideration)*
- *Part 25: Abstract test suite for FDDI – Station Management Conformance Testing (SMT-ATS)*
- *Part 26: Media Access Control Conformance Testing (MAC-ATS) (under consideration)*

---

1) To be published

Documents
Document Sharing Hub

Full document details: ISO_IEC 9314-8_1998

INTRODUCTION

The Fibre Distributed Data Interface (FDDI), ISO/IEC 9314, is intended for use in a high-performance general purpose multi-node network and is designed for efficient operation with a peak data rate of 100 Mbit/s. It uses a Token Ring architecture with optical fibre as the transmission medium. FDDI provides for hundreds of nodes operating over an extent of tens of kilometres.

The Media Access Control (MAC) specifies the lower sublayer of the Data Link Layer for the FDDI. As such, it presents the specifications and services provided for conforming FDDI attachment devices. MAC specifies the access to the medium, including addressing, data checking, and data framing. MAC also specifies the receiver and transmitter state machines.

When the set of basic FDDI standards, ISO/IEC 9314, is completed it will include the following standards:

a) A Physical Layer Protocol (PHY), which specifies the upper sublayer of the Physical Layer of ISO/IEC 9314.

b) A Physical Layer Media Dependent (PMD), which specifies the lower sublayer of the Physical Layer of ISO/IEC 9314.

c) A Station Management (SMT), which specifies the local portion of the system management application process of ISO/IEC 9314.

A number of extensions to ISO/IEC 9314 are completed or in process. One extension, ISO/IEC 9314-5, for Hybrid Ring Control (HRC), commonly known as FDDI-II, extends the capability of FDDI to handle isochronous data streams at a multiplicity of data rates. Another extension, ISO/IEC 9314-4, provides for a single-mode optical fibre version of PMD (SMF-PMD) and will permit optical links of up to 60 km.

Other work, addressing alternate PMDs, is aimed at providing low-cost attachments for use in concentrator-to-workstation environments. This work includes a Low-Cost Fibre PMD (LCF-PMD) and a (copper) Twisted Pair PMD (TP-PMD).

This part of ISO/IEC 9314 for MAC-2 is an enhancement to the original FDDI standard on MAC (ISO 9314-2). It is referred to as MAC-2 when it is necessary to distinguish it from the original MAC. Changes include those identified in footnotes to ISO 9314-2 as areas that the standards committee intended to change as well as changes that were required for extensions to FDDI, such as FDDI-II and MAC level bridging. MAC-2 also includes editorial corrections and clarifications.

Documents
Document Sharing Hub

Full document details: ISO_IEC 9314-8_1998

INFORMATION TECHNOLOGY —
FIBRE DISTRIBUTED DATA INTERFACE (FDDI) —

Part 8: Media Access Control-2 (MAC-2)

1 Scope

This part of ISO/IEC 9314 specifies the Media Access Control (MAC), the middle sublayer of the Data Link Layer (DLL), for Fibre Distributed Data Interface (FDDI).

FDDI (ISO/IEC 9314) provides a high-bandwidth (100 Mbit/s), general-purpose interconnection among information processing systems, subsystems and peripheral equipment, using fibre optics or other transmission media. FDDI can be configured to support a sustained data transfer rate of at least 80 Mbit/s (10 Mbyte/s). FDDI provides connectivity for many nodes distributed over distances of many kilometres in extent. Certain default parameter values for FDDI (e.g. timer settings) are calculated on the basis of up to 1 000 transmission links or up to 200 km total fibre path length (typically corresponding to 500 nodes and 100 km of dual fibre cable, respectively); however, the FDDI protocols can support much larger networks by increasing these parameter values.

As shown in figure 1, ISO/IEC 9314 consists of

a) A Physical Layer (PL), which is divided into two sublayers:

   1) A Physical Medium Dependent (PMD), which provides the digital baseband point-to-point communication between nodes in the FDDI network. The PMD provides all services necessary to transport a suitably coded digital bit stream from node to node. The PMD defines and characterizes the fibre-optic drivers and receivers, medium-dependent code requirements, cables, connectors, power budgets, optical bypass provisions, and physical-hardware-related characteristics. It specifies the point of interconnectability for conforming FDDI attachments. The initial PMD standard, ISO/IEC 9314-3, defines attachment to multi-mode fibre. Additional PMD sublayer standards are being developed for attachment to single-mode fibre and SONET.

   2) A Physical Layer Protocol (PHY), which provides connection between the PMD and the Data Link Layer. PHY establishes clock synchronization with the upstream code-bit data stream and decodes this incoming code-bit stream into an equivalent symbol stream for use by the higher layers. PHY provides encoding and decoding between data and control indicator symbols and code bits, medium conditioning and initializing, the synchronization of incoming and outgoing code-bit clocks, and the delineation of octet boundaries as required for the transmission of information to or from higher layers. Information to be transmitted on the medium is encoded by the PHY using a group transmission code.

b) A Data Link Layer (DLL), which is divided into two or more sublayers:

   1) An optional Hybrid Ring Control (HRC), which provides multiplexing of packet and circuit switched data on the shared FDDI medium. HRC comprises two internal components, a Hybrid Multiplexer (H-MUX) and an isochronous MAC (I-MAC). H-MUX maintains a synchronous 125 µs cycle structure and multiplexes the packet and circuit switched data streams, and I-MAC provides access to circuit switched channels.

Documents
Document Sharing Hub

Full document details: ISO_IEC 9314-8_1998

2) A Media Access Control (MAC), which provides fair and deterministic access to the medium, address recognition, and generation and verification of frame check sequences. Its primary function is the delivery of packet data, including frame generation, repetition, and removal. The definition of MAC is contained in this part of ISO/IEC 9314.

3) An optional Logical Link Control (LLC), which provides a common protocol for any required packet data adaptation services between MAC and the Network Layer. LLC is not specified by FDDI.

4) An optional Circuit Switching Multiplexer (CS-MUX), which provides a common protocol for any required circuit data adaptation services between I-MAC and the Network Layer. CS-MUX is not specified by FDDI.

c) A Station Management (SMT), which provides the control necessary at the node level to manage the processes under way in the various FDDI layers such that a node may work cooperatively on a ring. SMT provides services such as control of configuration management, fault isolation and recovery, and scheduling policies.

The MAC definition contained herein is designed to be as independent as possible from both the physical medium and the speed of operation. Concepts employed in ISO/IEC 8802-5, dealing with Token Ring MAC operation have been modified to accommodate the higher FDDI speeds, while retaining a similar set of services and facilities.

ISO/IEC 9314 specifies the interfaces, functions, and operations necessary to ensure interoperability between conforming FDDI implementations. This part of ISO/IEC 9314 provides a functional description. Conforming implementations may employ any design technique that does not violate interoperability. Implementations that conform to this part of ISO/IEC 9314 shall also be interoperable with implementations that conform to ISO 9314-2 if the additional capability of hybrid mode operation (as defined in this document) is not being used. Implementers are encouraged to consult ISO 9314-2 in addition to this part of ISO/IEC 9314.

Documents
Document Sharing Hub

Full document details: ISO_IEC 9314-8_1998

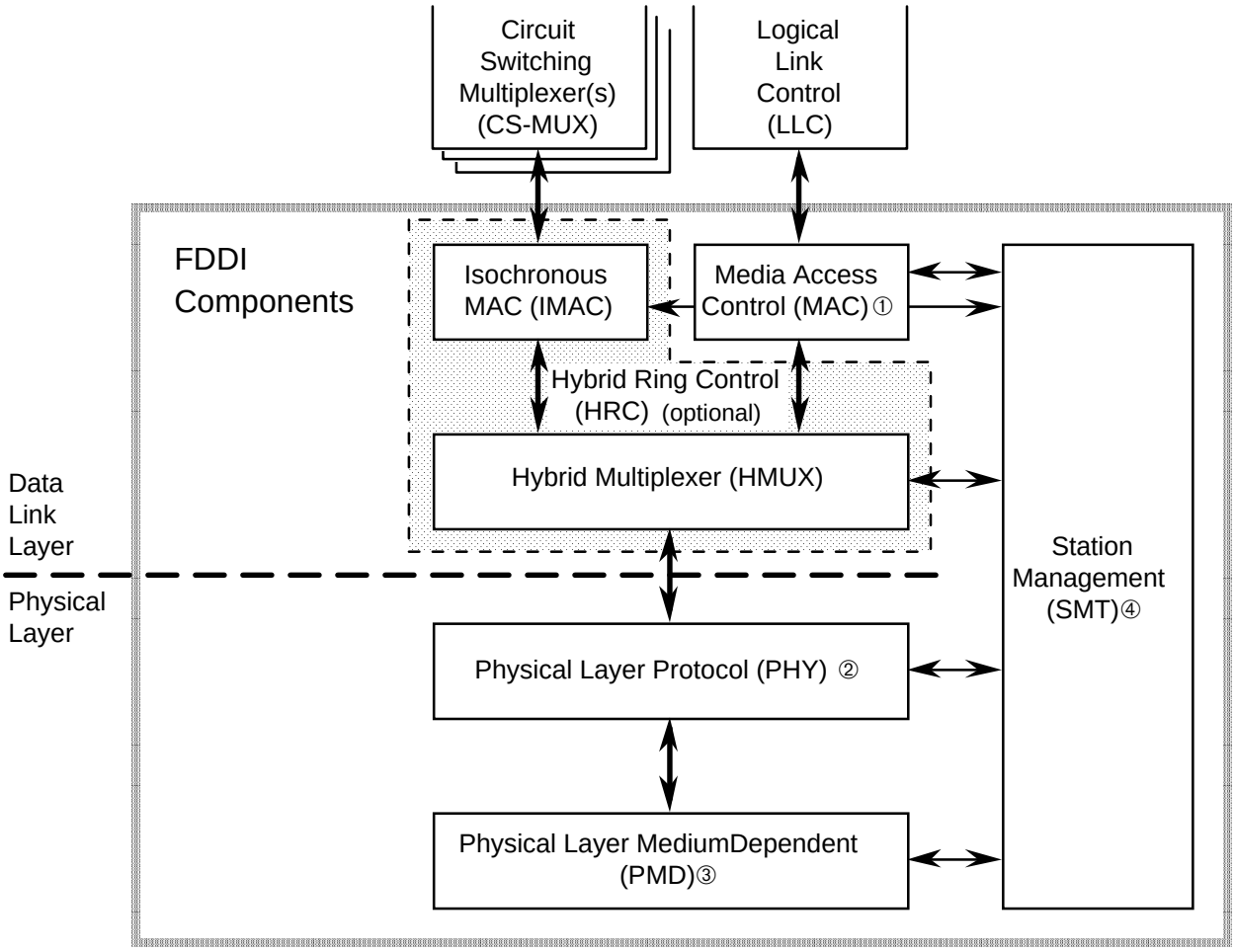

① MAC-2 with HRC; MAC or MAC-2 otherwise.

② PHY-2 with HRC; PHY or PHY-2 otherwise.

③ PMD, SMF-PMD, TP-PMD or LCF-PMD.

④ SMT-2 with HRC; SMT or SMT-2 otherwise.

Figure 1 – FDDI structure

2 Normative references

The following standards contain provisions which, through reference in this text, constitute provisions of this part of ISO/IEC 9314. At the time of publication, the editions indicated were valid. All standards are subject to revision, and parties to agreements based on this part of ISO/IEC 9314 are encouraged to investigate the possibility of applying the most recent editions of the standards listed below. Members of IEC and ISO maintain registers of currently valid International Standards.

ISO/IEC 8802-2: 1994, *Information technology - Telecommunications and information exchange between systems - Local and metropolitan area networks - Specific requirements - Part 2: Logical link control*

ISO/IEC 8802-5: 1992, *Information technology - Telecommunications and information exchange between systems - Local and metropolitan area networks - Specific requirements - Part 5: Token ring access method and physical layer specifications*

Documents
Document Sharing Hub
Full document details: ISO_IEC 9314-8_1998

ISO 9314-1: 1989, *Information processing systems - Fibre Distributed Data Interface (FDDI) - Part 1: Token Ring Physical Layer Protocol (PHY)*

ISO 9314-2: 1989, *Information processing systems - Fibre Distributed Data Interface (FDDI) - Part 2: Token Ring Media Access Control (MAC)*

ISO/IEC 9314-3: 1990, *Information processing systems – Fibre Distributed Data Interface (FDDI) – Part 3: Physical Layer Medium Dependent (PMD)*

ISO/IEC 9314-4, *Information technology – Fibre Distributed Data Interface (FDDI) – Part 4: Single Mode Fibre Physical Layer Medium Dependent (SMF-PMD)* [1)]

ISO/IEC 9314-5:1995, *Information technology - Fibre Distributed Data Interface (FDDI) - Part 5: Hybrid Ring Control (HRC)*

ISO/IEC 9314-6: *Information technology - Fibre Distributed Data Interface (FDDI) - Part 6: Station Management (SMT)*

ISO/IEC 9314-7: *Information technology - Fibre Distributed Data Interface (FDDI) - Part 7: Physical Layer Protocol (PHY-2)*

ISO/IEC 10038: 1993, *Information technology - Telecommunications and information exchange between systems - Local area networks - Media access control (MAC) bridges*

3 Definitions

For the purposes of this part of ISO/IEC 9314, the following definitions apply. In some cases these definitions may duplicate those contained in other parts of ISO/IEC 9314. Such definitions are included for completeness and to improve readability. In certain cases, definitions herein may slightly update those contained in the earlier published parts of ISO/IEC 9314 to improve their clarity.

3.1 asynchronous: A class of data transmission service whereby all requests for service contend for a pool of dynamically allocated ring bandwidth and response time.

3.2 Basic mode: The mode of ring operation where MAC PDUs (frames and tokens) are directly transmitted by PHY.

3.3 bypass: The ability of a node to optically isolate itself from the FDDI network while maintaining the continuity of the cable plant.

3.4 capture: The act of removing a token from the ring for the purpose of Frame transmission.

3.5 claim token: A process whereby one or more MACs bid for the right to initialize the ring.

3.6 counter-rotating: An arrangement whereby two signal paths in opposite directions exist in a ring topology.

3.7 cycle: A Protocol Data Unit transmitted between cooperating HRC entities on a ring, consisting of a fixed number of octets in each 125 µs interval.

[1)] To be published.

Documents
Document Sharing Hub

Full document details: ISO_IEC 9314-8_1998

3.8 entity: An active service or management element within an Open System Interconnection (OSI) layer, or sublayer.

3.9 fibre optics: A technology whereby signals are transmitted over an optical waveguide medium through the use of light-generating transmitters and light-detecting receivers.

3.10 frame: A Protocol Data Unit transmitted between cooperating MAC entities on a logical ring, consisting of a variable number of octets and control symbols.

3.11 Hybrid mode: The mode of ring operation where HRC PDUs (cycles) are transmitted by PHY.

3.12 Hybrid Ring Control (HRC): The Data Link Layer entity responsible for multiplexing of packet and circuit switched data, and providing access to circuit switched channels, in an FDDI logical ring.

3.13 immediate: A class of data transmission service whereby requests for service from SMT when the ring is non-operational are performed immediately without capture of a token.

3.14 logical ring: The set of FDDI Data Link Layer entities (HRC or MAC) serially connected to form a single ring. The FDDI network topology can form two counter-rotating logical rings; however, some subsets of this topology only form a single logical ring.

3.15 Media Access Control (MAC): The Data Link Layer entity responsible for scheduling and routing packet data transmissions in an FDDI logical ring.

3.16 my long address (MLA): The 48-bit Individual Address of this MAC.

3.17 my short address (MSA): The 16-bit Individual Address of this MAC.

3.18 network (FDDI network): A collection of FDDI nodes interconnected to form a trunk, or a tree, or a trunk with multiple trees. This topology is sometimes called a dual ring of trees.

3.19 node: A collection of Physical Layer (e.g. PMD and PHY) and optional Data Link Layer (e.g. MAC and HRC) entities within an FDDI network, capable of repeating information and optionally of transmitting and receiving information, and managed by one SMT entity.

3.20 non-restricted token: A token denoting the normal mode of asynchronous bandwidth allocation, wherein the available bandwidth is shared among requesters.

3.21 null address: An address of all zeros, or an address that is either not implemented or implemented but not enabled.

3.22 octet: A data unit composed of eight ordered binary bits. An octet is represented in FDDI as a pair of data symbols.

3.23 Physical Layer Medium Dependent (PMD): The Physical Layer entity responsible for delivering a code bit stream produced by a PHY entity to the physically adjacent PHY entity, attached via fibre optics, in an FDDI network.

3.24 Physical Layer Protocol (PHY): The Physical Layer entity responsible for delivering a symbol stream produced by an upstream DLL entity (MAC or HRC) to the logically adjacent downstream DLL entity in an FDDI network.

3.25 primitive: An element of the services provided by one entity to another.

3.26 Protocol Data Unit (PDU): The unit of information transfer between communicating peer layer entities. It may contain control information, address information, data (e.g. an SDU from a higher layer entity), or any combination of the three. The FDDI MAC PDUs are tokens and frames.

Documents
Document Sharing Hub
Full document details: ISO_IEC 9314-8_1998

3.27 receive: The action of a node that consists of accepting an information stream (e.g. frame, token, cycle or control sequence) from the medium. The node receiving the information stream may examine it and selectively copy it as appropriate.

3.28 repeat: The action of a node that consists of receiving an information stream from an upstream node and reproducing it on the medium to a downstream node. The node repeating the information stream may examine it and selectively copy or modify it as appropriate.

3.29 restricted token: A token denoting a special mode of asynchronous bandwidth allocation, wherein the bandwidth available for the asynchronous class of service is dedicated to a single extended dialogue between specific requesters.

3.30 ring: A closed loop consisting of one or more stations connected by a physical medium wherein information is passed sequentially between active stations, each station in turn examining or copying and repeating the information, finally returning it to the originating station.

3.31 Service Data Unit (SDU): The unit of data transfer between a service user and a service provider.

3.32 services: A set of functions provided by one OSI layer or sublayer entity, for use by a higher layer or sublayer entity or by management entities. Data services are provided to a higher layer or sublayer entity; management services are provided to a management entity.

3.33 source routing: A method of routing frames through a bridged network in which the source station specifies within each frame the route it will traverse.

3.34 station: An addressable logical and physical node in an FDDI network, capable of transmitting, repeating and receiving information. An FDDI station has one or more PHY and PMD entities, zero or more HRC entities, one or more MAC entities, and one SMT entity.

3.35 Station Management (SMT): The supervisory entity within an FDDI node that monitors and controls the other FDDI entities in the node.

3.36 symbol: The smallest signalling element used by the Data Link Layer (DLL). The symbol set consists of 16 data symbols and 9 control symbols.

3.37 synchronous: A class of data transmission service whereby each requester is preallocated a maximum bandwidth and guaranteed a maximum access time.

3.38 token: An explicit indication of the right to transmit on a shared medium. On a token ring, the token circulates sequentially through the stations in the ring. At any time, it may be held by zero or one station. MAC uses two classes of tokens: restricted and non-restricted.

3.39 transmit: The action of a node that consists of generating an information stream (*e.g.* frame, token, cycle or control sequence) and placing it on the medium.

3.40 transparent bridging: A method of routing frames through a bridged network in which intermediate bridge stations determine the route that each frame will traverse without explicit involvement of the end stations.

Documents
Document Sharing Hub

Full document details: ISO_IEC 9314-8_1998

4 Conventions and abbreviations

4.1 Conventions

The terms SMT, MAC, HRC, PHY and PMD, when used without modifiers, refer specifically to the local FDDI entities within a node. The term LLC unless otherwise qualified refers to any local user of MAC data services, other than SMT, including those conforming to ISO 8802-2.

Low lines (*e.g.* requested_service_class) are used as a convenience to mark the name of signals, functions, etc., that might otherwise be misinterpreted as independent individual words if they were to appear in text.

The use of a period (*e.g.* MA_UNITDATA.request) is equivalent to the use of a low line except that a period is used as an aid to distinguish modifier words appended to an antecedent expression.

Subscripts or other object selectors are denoted by square brackets in text (*e.g.* aggregate object[subscript]).

Optional capabilities are distinguished from required capabilities by the use of dashed lines in drawings or curved braces in text (*e.g.* required capability { | optional capability }).

Subordinate clauses in state machine footnotes are denoted by indentation (*e.g.* matching THEN and ELSE clauses are indented one level beneath their IF clause).

Comments in state machine footnotes are denoted by double brackets (*e.g.* condition « comment »).

4.1.1 Addressing

MSA = the 16-bit Individual Address of this MAC, if implemented and enabled by SMT; otherwise MSA = Null.

MLA = the 48-bit Individual Address of this MAC, if enabled by SMT; otherwise MLA = Null.

Short_Addresses is the set of 16-bit MAC addresses including MSA if enabled, the 16-bit Broadcast Address (all ones), and any other 16-bit Group Addresses recognized by this MAC.

Long_Addresses is the set of 48-bit MAC addresses including MLA if enabled, the 48-bit Broadcast Address (all ones), and any other 48-bit Group Addresses recognized by this MAC.

When claiming the token, if the MAC transmits with 16-bit addressing, then MLA = Null; conversely, if the MAC transmits with 48-bit addressing, then MSA = Null.

A Null Address consists of all zeros in MAC PDUs. The representation of Null and/or disabled addresses within a station is not specified; however, by convention such addresses are represented as all zeros in this document.

Transparent_Bridge_Addresses is the set of 48-bit MAC addresses to be forwarded by transparent bridges.

4.1.2 Timing values and timers

All timing values, when encoded in binary form, are expressed as the unsigned twos complement of the target or remaining time in octets, i.e. the numerically greater magnitude represents the shortest time remaining. This definition is for reference purposes only and

Documents
Document Sharing Hub
Full document details: ISO_IEC 9314-8_1998

does not prescribe the implementation, except where these timing values appear in Protocol Data Units on the ring. These timing values are not all used simultaneously in the state machines; consequently, the implementation need not instantiate them when they are not needed.

Timers are given a name of the form TXX where XX are two capital letters, an example is the token rotation timer TRT. By convention, all timers are assumed to be initialized with the unsigned twos complement of the target, or remaining, time in octets. Timers are further assumed to count upward if enabled, expiring when an overflow occurs. All timer comparisons are expressed on the basis of elapsed time. These conventions are for reference purposes only and do not prescribe implementation.

4.2 Abbreviations

A	Address Recognized Indicator in Frame Status field of a frame
A_Flag	Indicates Destination Address match in last received frame
A_Max	Maximum signal acquisition time
B_Flag	Indicates new restricted dialog may Begin on this token rotation
C	Frame Copied Indicator in Frame Status field of a frame
CMT	Connection Management function of Station Management
Copied_ct	Count of PDUs addressed to and copied by the MAC
C_Flag	Indicates successful copying of last received frame
DA	Destination Address field of a frame
DLL	Data Link Layer
DM_Min	Minimum duplicate MAC frame detection delay
D_Flag	Indicates that the duplicate MAC frame detection delay has transpired
D_Max	Maximum ring latency time
E	Error Detected Indicator in Frame Status field of a frame
ED	Ending Delimiter field of a MAC PDU
Error_ct	Count of reportable frame errors
E_Flag	Indicates error detected in last received frame
FC	Frame Control field of a MAC PDU
FCS	Frame Check Sequence field of a frame
FF	Frame Format bits in Frame Control field of a MAC PDU
Frame_ct	Count of all frames received
FS	Frame Status field of a frame
F_Max	Maximum frame time
HRC	Hybrid Ring Control
H_Flag	Indicates Higher Source Address received
IG	Individual/Group bit in Destination Address field of a frame
INFO	Information field of a frame

Documents
Document Sharing Hub
Full document details: ISO_IEC 9314-8_1998

I_Max	Maximum node physical insertion time
Last_FC	The Frame Control field of the last valid Frame or Token Received
Late_ct	Count of TRT expirations (token lateness)
LLC	Local Link Control
Lost_ct	Count of PDUs detected as lost
L_Flag	Indicates Lower Source Address received
L_Max	Maximum transmitter frame set-up time
MAC	Media Access Control
MLA	My Long Address
MSA	My Short Address
M_Flag	Indicates My Source Address received
M_Max	Maximum number of MAC entities allowed on the ring
Not_Copied_ct	Count of PDUs addressed to and not copied by the MAC
NSA	Next Station Addressing frame
N_Flag	Indicates No copy acknowledgment for this frame
PA	Preamble between MAC PDUs
PDU	Protocol Data Unit
PHY	Physical Layer Protocol
PMD	Physical Layer Medium Dependent
P_Flag	Indicates Purge in process
RI	Routing Information field of a frame
RII	Routing Information Indicator bit in Source Address field of a frame
RMT	Ring Management function of Station Management
R_Flag	Indicates last valid token received was restricted
SA	Source Address field of a frame
SD	Starting Delimiter field of a MAC PDU
SDU	Service Data Unit
SMT	Station Management
S_Min	Minimum safety timing allowance
THT	Token-Holding Timer
Token_ct	Count of tokens received by the MAC
Transmit_ct	Count of PDUs transmitted by the MAC
TRT	Token-Rotation Timer
TTRT	Target Token Rotation Time
TVX	Valid-Transmission Timer
TVX_value	TVX timeout value

Documents
Document Sharing Hub
Full document details: ISO_IEC 9314-8_1998

T_Bid_rc	Bidding TTRT received by this MAC in Claim Frames
T_Bid_tx	Bidding TTRT transmitted in this MAC's Claim Frames
T_Flag	Indicates that the last captured token was early
T_Init	Maximum allowed ring initialization time
T_Max	Maximum TTRT to be supported by this MAC
T_Min	Minimum TTRT to be requested by this MAC
T_Neg	Negotiated TTRT during Claim process (in receiver)
T_Opr	Operative TTRT for this MAC (in transmitter)
T_Pri	Set of n priority Token Rotation Time thresholds
T_Pri[n]	Element n of the set T_Pri
T_React	Maximum allowed time to react to a major ring fault
T_Req	Requested TTRT for this MAC's traffic
T_Resp	Maximum allowed time to recover a token

5 General description

An FDDI network consists of a set of nodes (*e.g.* stations) connected by optical transmission media into one or more logical rings. A logical ring consists of a set of stations connected as an alternating series of nodes and transmission media to form a closed loop (see figure 2). Information is transmitted sequentially, as a stream of suitably encoded symbols, from one active node to the next. Each node generally regenerates and repeats each symbol and serves as the means for attaching one or more devices to the ring for the purpose of communicating with other devices on the ring.

Two kinds of data service can be provided in a logical ring: packet service and circuit service. For packet service, a given station (the one that has access to the medium) transmits information on to the ring as a series of data packets, where each packet circulates from one station to the next. The addressed destination station(s) copies the packets as they pass. Finally, the station that transmitted the packets effectively removes them from the ring. For circuit service, some of the logical ring bandwidth is allocated to independent channels. Two or more stations can simultaneously communicate via each channel. The structure of the information stream within each channel is determined by the stations sharing that channel.

FDDI provides packet service via a token ring, wherein a station gains the right to transmit its information on to the medium when it detects a token passing on the medium. The token is a control signal comprised of a unique symbol sequence that circulates on the medium following each series of transmitted packets. Any station, upon detection of a token, may capture the token by removing it from the ring. The station may then transmit one or more data packets. After transmitting its packets, the station issues a new token, which provides other stations the opportunity to gain access to the ring.

A Token-Holding Timer, or equivalent means, limits the length of time a station may use (occupy) the medium before passing the token.

Multiple levels of priority are available for independent and dynamic assignment depending upon the relative class of service required. The classes of service may be synchronous (typically used for applications such as real-time packet voice), asynchronous (typically used

Documents
Document Sharing Hub
Full document details: ISO_IEC 9314-8_1998

for interactive applications), or immediate (used for extraordinary applications such as ring recovery). The allocation of ring bandwidth occurs by mutual agreement among users of the ring.

Error detection and recovery mechanisms are provided to restore ring operation in the event that transmission errors or medium transients (e.g., those resulting from station insertion or removal) cause the access method to deviate from normal operation. Detection and recovery for these cases utilizes a recovery function that is distributed among the stations attached to the ring.

Hybrid mode is the mode of operation where both token ring operation and isochronous data transfer are multiplexed on the same medium. Hybrid mode operation requires the existence of a Hybrid Ring Control (HRC) entity. HRC passes all packet data to the packet MAC entity. HRC does not pass isochronous data to the packet MAC.

The media access method as specified herein is intended to place minimal constraints on the higher layer protocols employed to effect data transfer.

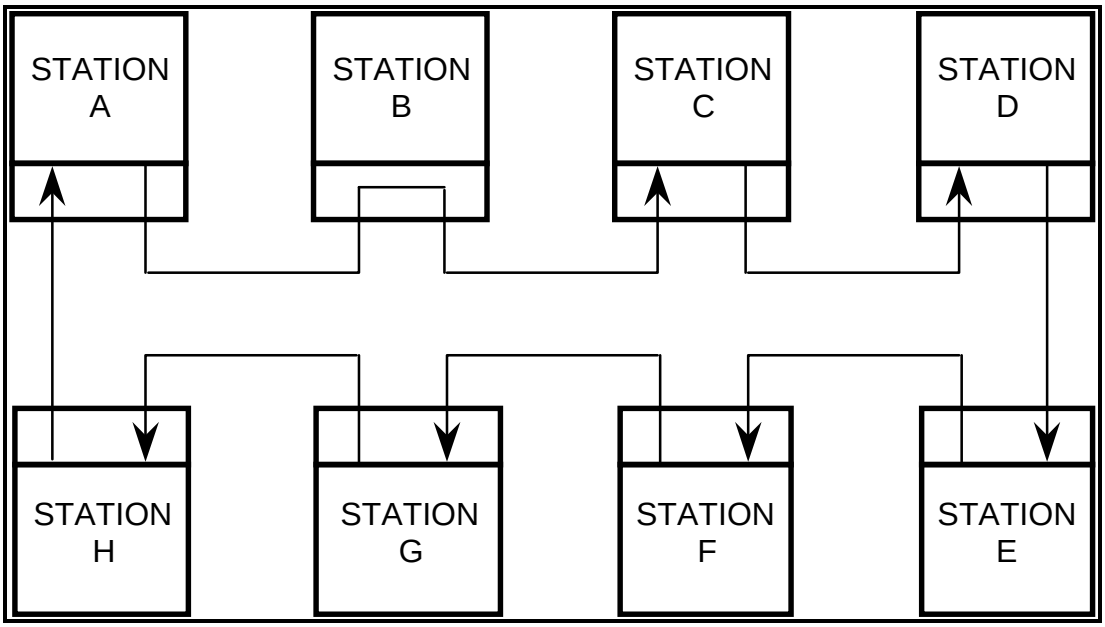

All stations are active except B (illustrated in bypass mode)

Figure 2 – Token ring logical configuration example

6 Services

This clause specifies the services provided by MAC and the services required by MAC. The following services are defined:

Documents
Document Sharing Hub
Full document details: ISO_IEC 9314-8_1998

a) Data services provided by MAC to the optional local Logical Link Control (LLC) entity, or other optional MAC users, denoted by a MA_ prefix.

b) Data services required by MAC from the local PHY entity when the optional HRC function is not present, denoted by a PH_ prefix.

c) Data services required by MAC from the local H-MUX entity when the optional HRC function is present, denoted by the HM_ and HP_ prefixes.

d) Management services provided by MAC to the local SMT entity, denoted by a SM_MA_ prefix.

Some services and service primitives defined in this clause are optional; however, an implementation shall provide a set of MAC services sufficient to support correct operation of Station Management (SMT) protocols as well as any other protocol(s) being used (*e.g.* ISO 8802-2).

The definition of these services is for reference purposes only, and is not intended to specify an implementation of the MAC interfaces. Any implementation technique that causes the same external behaviour of the protocol is equally valid.

6.1 MAC-to-LLC services

This subclause specifies the services provided at the interface between the MAC and the local LLC (or other MAC user) entities, to support the exchange of PDUs among peer LLC (or other MAC users such as a MAC relay function or implementor functions) entities. These services provide delivery of submitted SDUs to individual peer entities (with individual addresses), or to multiple peer entities (with group addresses). These services may be used to exchange both LLC frames and, optionally, implementor frames.

The following primitives are defined:

MA_UNITDATA.request
MA_UNITDATA.indication
MA_UNITDATA_STATUS.indication
MA_TOKEN.request

The primitives defined in this subclause are optional.

The description of each primitive includes a description of the information that shall be passed between the MAC and the LLC (or other MAC user) entities.

6.1.1 MA_UNITDATA.request

This optional primitive defines the transfer of SDUs to MAC from a local LLC entity or other MAC users, for delivery to one or more peer entities.

6.1.1.1 Semantics of the primitive

```
MA_UNITDATA.request        (
                           { requested_token_class, }
                           { requested_service_class, }
                           { asynchronous_priority, }
                           FC_value [1],
                           destination_address [1],
```

Documents
Document Sharing Hub
Full document details: ISO_IEC 9314-8_1998

```
{ source_address[1],
  { bridge_route [1], } }
M_SDU [1],
{ FCS[1], }
{ stream [1], }
{ FC_value [2],
  destination_address [2],
  { source_address[2],
    { bridge_route [2], } }
  M_SDU [2],
  { FCS[2], }
  stream [2], }
    .
    .
    .
{ FC_value [n],
  destination_address [n],
  { source_address[n],
    { bridge_route [n], } }
  M_SDU [n],
  { FCS[n], }
  stream [n], }
{ issued_token_class }
)
```

Requested_token_class may optionally be either non-restricted, restricted, or any. MACs implementing the optional restricted token capability control restricted dialogs through requested_token_class, which may require capture of either a restricted or non-restricted token to service the request.

Requested_service_class may optionally be either Synchronous or Asynchronous. If asynchronous, the asynchronous_priority level may optionally be specified.

Each set of FC_value, destination_address, bridge_route, M_SDU and stream parameters specifies one frame for transmission and is referred to as a subrequest.

The FC_value parameter supplies the Frame Control (FC) field to be transmitted as part of the frame. The Frame Format value of zero (FC.FF = 00, i.e. SMT or MAC frames) shall not be accepted with this service primitive (see 6.4.4).

The destination_address parameter may specify either an individual or a group MAC address. It shall contain sufficient information to create the DA (Destination Address) field. Address length is determined by the L bit of the associated FC_value parameter (see 7.3.3).

If the M_SDU is being forwarded by a bridge, the optional source_address parameter shall specify the individual_MAC_address of the original source MAC.

If the M_SDU is being forwarded by a bridge, the optional bridge_route parameter causes generation of a Routing Information (RI) field. It shall contain sufficient information to create the RI field. If no bridge_route parameter is supplied, then no RI field will be generated.

The M_SDU parameter specifies the Service Data Unit to be transmitted in the Information field of the frame. There shall be sufficient information associated with the M_SDU for MAC to determine the length of the service data unit.

Documents
Document Sharing Hub

Full document details: ISO_IEC 9314-8_1998

If the M_SDU is being forwarded from another FDDI ring by a bridge, the optional FCS parameter shall specify the Frame Check Sequence sent by the original source MAC.

The optional stream parameter, if set, shall cause multiple M_SDUs to be transmitted as a result of the MA_UNITDATA.request. Stream, when reset, indicates that this M_SDU is the last one associated with this MA_UNITDATA.request. The frames shall be transmitted in the order presented by this primitive. If TRT (Token-Rotation Timer) has expired (Late_ct _ 0) or if a frame is encountered that cannot be transmitted because of the current value of THT (Token-Holding Timer), then transmission is terminated without altering Token_Class. A MA_UNITDATA_STATUS.indication is subsequently returned to LLC. If the transmission_status is successful, MAC may initiate transmission of the remaining frames on the next permitted access opportunity, or alternatively, MAC may require submission of a new MA_UNITDATA.request. Care must be taken when initiating or terminating restricted token mode that multiple subrequests will be serviced correctly if the token is issued before all subrequests are serviced.

Issued_token_class optionally specifies the Token_Class that MAC shall issue following transmission of the associated SDUs (i.e. at the end of the request), if no other request is pending that can be honoured. With requests for synchronous service the issued_token_class shall be the class of the token that was captured; with requests for asynchronous service it may be either restricted or nonrestricted. If no SDUs were specified by the MA_UNITDATA.request, then MAC shall immediately issue the requested class of token.

6.1.1.2 When generated

This primitive is generated by the local LLC entity whenever a MAC SDU is to be transferred to a peer LLC entity or entities, or when a token is to be issued after an MA_TOKEN.request if no SDUs are to be transferred. This may be in response to a request from higher layers of protocol or from PDUs generated internally within LLC.

6.1.1.3 Effect of receipt

The receipt of this primitive shall cause MAC to capture the next usable token based on the request parameters. MAC then enters State T2 (Transmit Data), appends all MAC-specific fields, including DA, SA (Source Address), and any fields that are unique to the medium access method, and submits the properly formed frame(s) to the lower layer local entity (PHY or H-MUX) for transfer to peer MAC entities.

6.1.2 MA_UNITDATA.indication

This optional primitive defines the transfer of SDUs from MAC to the local LLC entity or other MAC users.

6.1.2.1 Semantics of the primitive

```
MA_UNITDATA.indication          (
                                FC_value,
                                destination_address,
                                source_address,
                                { bridge_route, }
                                M_SDU,
```

Documents
Document Sharing Hub
Full document details: ISO_IEC 9314-8_1998

```
                                        { FCS, }
                                        reception_status
                                        )
```

The FC_value parameter is the value of the Frame Control (FC) field. The Frame Format value of zero (FC.FF = 00, i.e. SMT or MAC frames) shall not be delivered with this service primitive (see 6.4.5).

The destination_address parameter may be either an individual or a group address as specified by the DA field of the incoming frame.

The source_address parameter is the individual address as specified by the SA field of the incoming frame.

The optional bridge_route parameter indicates reception of a Routing Information (RI) field. It conveys the contents of the RI field. If no RI field is received, then no bridge_route parameter is generated.

The M_SDU parameter conveys the MAC service data unit as received in the Information field of the frame.

The optional FCS parameter conveys the Frame Check Sequence as received in the FCS field of the frame.

The reception_status parameter indicates the success or failure of the incoming frame. It consists of the following elements:

a) Frame validity: FR_GOOD or optionally FR_BAD

   If FR_BAD is reported, the reason for the error shall also be reported. The reason shall be one of the following:

   1) **Invalid FCS:** Calculated Frame Check Sequence (FCS) does not match the received FCS.

   2) **Length Error:** The frame did not have a valid data length.

   3) **Internal Error:** An internal error has occurred that prevents MAC from transferring to LLC a frame that has been acknowledged by the setting of the C (frame copied) indicator.

   4) **E Indicator Error:** The error detected indicator for the frame was not received as reset (R) (i.e. either set (S) or missing).

b) Frame Status: The received E (error detected), A, C, and, optionally, any other Indicator values. The reported status for each individual indicator shall include received as set (S), received as reset (R), or not received as set or reset.

6.1.2.2 When generated

The MA_UNITDATA.indication primitive shall be generated by MAC to indicate to the local LLC entity the receipt of a valid LLC or Implementor frame addressed to this entity. This primitive shall (optionally) be generated to indicate receipt of an invalid LLC or Implementor frame addressed to this entity when the optional indicate on bad frames function has been selected (see 6.4.2.3).

Documents
Document Sharing Hub

Full document details: ISO_IEC 9314-8_1998

6.1.2.3 Effect of receipt

The effect of receipt of this primitive by the LLC entity is not specified.

6.1.3 MA_UNITDATA_STATUS.indication

This optional primitive defines the response to an MA_UNITDATA.request primitive signifying the success or failure of the request.

6.1.3.1 Semantics of the primitive

```
MA_UNITDATA_STATUS.indication    (
                                 number_of_SDUs,
                                 transmission_status,
                                 )
```

The number_of_SDUs parameter reports the number of M_SDUs transmitted on a given access opportunity as a result of this request.

The transmission_status parameter shall be used to pass information back to the local requesting LLC entity. It shall be used to indicate the success or failure of a previous associated MA_UNITDATA.request. The relationship between requests and status indications is implementor defined; and an implementation may provide a single status indication for a request, or an indication for one or more subrequests if the MA_UNITDATA.request primitive specified more than one M_SDU.

6.1.3.2 When generated

This primitive shall be generated by MAC in response to an MA_UNITDATA.request primitive from the local LLC entity.

6.1.3.3 Effect of receipt

The effect of receipt of this primitive by LLC is unspecified.

NOTE - In the event of multiple outstanding requests, additional information may be needed in order for LLC to associate the response with the appropriate request. The association may be implied by the requests being serviced in a first-in-first-out (FIFO) manner. Alternatively, MAC may maintain multiple queues of requests, at least one for each class_of_service implemented, servicing each of these queues in a FIFO manner. It is assumed that if the addressed peer MAC entity, or entities, acknowledge receipt of the frame(s) (by setting the C indicator), then either the frame(s) will be delivered, or an internal error should be reported, to the corresponding LLC entity, or entities, via an MA_UNITDATA.indication.

6.1.4 MA_TOKEN.request

This optional primitive is used by LLC to request the capture of the next usable token.

6.1.4.1 Semantics of the primitive

```
MA_TOKEN.request                 (
                                 requested_token_class,
```

Documents
Document Sharing Hub

Full document details: ISO_IEC 9314-8_1998

{ requested_service_class, }
{ asynchronous_priority }
)

Requested_token_class may be either non-restricted, restricted, or any. MACs implementing the optional restricted token capability control restricted dialogs through requested_token_class, which may require capture of either a restricted or non-restricted token to service the request.

Requested_service_class may optionally be either Synchronous or Asynchronous. If asynchronous, the asynchronous_priority level may optionally be specified.

6.1.4.2 When generated

This primitive may be generated by the local LLC entity when data of a time critical nature is to be transferred, or to control a restricted dialog.

6.1.4.3 Effect of receipt

The receipt of this primitive shall cause MAC to capture the next usable token based on the request parameters. MAC then enters State T2 (Transmit Data) and transmits Idle symbols (and void frames if required by L_max) until an MA_UNITDATA.request primitive is received from LLC unless TRT (or THT, for asynchronous requests) expires first, in which case MAC shall issue another token of the same Token_class as was captured.

NOTE - This primitive may be used for time critical operations to minimize the effects of ring latency. This mode of operation may cause longer than usual preambles preceding a frame, thus wasting ring bandwidth; therefore it should not be used for transfers of data on the FDDI ring that are not time critical.

6.2 MAC-to-PHY services

This subclause specifies the services provided at the interface between the MAC and the PHY entities to support the exchange of PDUs among peer MAC entities. Additional detail is provided in ISO 9314-1 and ISO/IEC 9314-7 concerning conditions that generate these primitives and PHY actions upon receipt of MAC generated primitives.

The following primitives are defined:

PH_UNITDATA.request
PH_UNITDATA.indication
PH_INVALID.indication

All primitives defined in this subclause are mandatory when the optional HRC function is not present. When the optional HRC function is present, these primitives are replaced by the MAC-to-H-MUX primitives defined in 6.3.

The description of each primitive includes a description of the information that is passed between the MAC and PHY entities.

These services shall be ‘synchronous’, so that each PH_UNITDATA.indication causes exactly one PH_UNITDATA.request. Depending upon the current internal configuration of the station, the PH_UNITDATA.request may be returned to the same PHY or to a different PHY.

To ensure correct operation of the Elasticity Buffer function defined in the FDDI PHY (see ISO 9314-1 and ISO/IEC 9314-7), the maximum MAC PDU length shall not exceed 9 000 symbols, including the Starting Delimiter through the fourth preamble (Idle) symbol after the PDU.

Documents
Document Sharing Hub
Full document details: ISO_IEC 9314-8_1998

6.2.1 PH_UNITDATA.request

This primitive transfers the symbol data stream from MAC to PHY.

6.2.1.1 Semantics of the primitive

```
PH_UNITDATA.request        (
                           PH_Request(symbol)
                           )
```

The symbol specified by PH_Request (symbol) shall be one of the following:

I, J, K, n, R, S or T, from the set of symbols defined in the FDDI PHY (see ISO 9314-1 and ISO/IEC 9314-7).

6.2.1.2 When generated

MAC shall generate one PH_UNITDATA.request for each PH_UNITDATA.indication received from PHY.

6.2.1.3 Effect of receipt

The effect of receipt of this primitive by PHY is not specified.

6.2.2 PH_UNITDATA.indication

This primitive transfers the symbol data stream to MAC from PHY.

6.2.2.1 Semantics of the primitive

```
PH_UNITDATA.indication     (
                           PH_Indication(symbol)
                           )
```

The symbol specified by PH_Indication (symbol) shall be one of the following:

H, I, J, K, n, R, S, T and optionally L, Q or V, from the set of symbols defined in the FDDI standard on PHY (see ISO 9314-1 and ISO/IEC 9314-7).

6.2.2.2 When generated

PHY shall generate a PH_UNITDATA.indication for each decoded symbol received from PMD. This indication shall be generated once every symbol period.

6.2.2.3 Effect of receipt

Upon receipt of this primitive, MAC shall accept a symbol from PHY, process it, and generate a corresponding PH_UNITDATA.request to PHY, conveying the resulting output symbol.

6.2.3 PH_INVALID.indication

This primitive indicates to MAC that continuity of the received symbol stream has been compromised.

Documents
Document Sharing Hub
Full document details: ISO_IEC 9314-8_1998

6.2.3.1 Semantics of the primitive

```
PH_INVALID.indication        (
                             PH_Invalid
                             )
```

The PH_Invalid parameter shall indicate that the PH_UNITDATA.indication symbol stream is invalid.

6.2.3.2 When generated

PHY shall generate this primitive whenever it detects a Quiet, Halt, Master, or Noise Line State, or other interruptions of the received symbol stream as specified in the FDDI standard on PHY (see ISO 9314-1 and ISO/IEC 9314-7).

6.2.3.3 Effect of receipt

Receipt of this primitive by MAC shall cause the MAC receiver to enter State R0, and to abort the processing of any PDU currently being received.

6.3 MAC-to-H-MUX Services

This subclause specifies the services provided at the interface between the MAC and the optional H-MUX entities to support the exchange of PDUs among peer MAC entities. The FDDI standard on HRC (see ISO/IEC 9314-5) defines two types of MAC entities, I-MAC and P-MAC. The P-MAC is the MAC specified in this standard, with the optional capabilities to support Hybrid mode implemented. Additional detail is provided in HRC concerning conditions that generate these primitives and H-MUX actions upon receipt of MAC generated primitives.

The following primitives are defined:

HM_MODE.indication
HP_UNITDATA.request
HP_UNITDATA.indication
HP_INVALID.indication
HP_MODE.request

All primitives defined in this subclause are mandatory when the optional HRC function is present. When the optional HRC function is not present, these primitives are replaced by the MAC-to-PHY primitives defined in MAC-to-PHY services (see 6.2).

The description of each primitive includes a description of the information that is passed between the MAC and H-MUX entities.

These services shall be ‘synchronous’, so that each HP_UNITDATA.indication causes exactly one HP_UNITDATA.request.

6.3.1 HM_MODE.indication

The function of this primitive is to provide information on the current mode of operation of H-MUX to the local MAC entity.

Documents
Document Sharing Hub
Full document details: ISO_IEC 9314-8_1998

6.3.1.1 Semantics of the Primitive:

```
HM_MODE.indication          (
                            HM_mode(mode)
                            )
```

The HM_mode parameter shall be set to ‘basic’ during Basic mode operation, ‘slave’ during Hybrid mode operation whenever the H-MUX Cycle Control state machine is in the SLAVE or STANDBY states, and ‘master’ during Hybrid mode operation whenever the H-MUX Cycle Control state machine is in the RESYNCH or MASTER states.

6.3.1.2 When Generated:

H-MUX continuously sends an indication of its mode to the local MAC entities.

6.3.1.3 Effect of Receipt:

The effect of receipt of this primitive by MAC is specified in the MAC state machines. This primitive alters the behaviour of the MAC recovery conditions and actions.

6.3.2 HP_UNITDATA.request

This primitive transfers the symbol data stream from MAC to H-MUX.

6.3.2.1 Semantics of the primitive

```
HP_UNITDATA.request         (
                            HP_Request(symbol)
                            )
```

The symbol specified by HP_Request (symbol) shall be one of the following:

I, J, K, L, n, R, S or T, from the set of symbols defined in the FDDI standard on PHY (see ISO 9314-1 and ISO/IEC 9314-7).

6.3.2.2 When generated

MAC shall generate one HP_UNITDATA.request for each HP_UNITDATA.indication received from H-MUX.

6.3.2.3 Effect of receipt

The effect of receipt of this primitive by H-MUX is not specified.

6.3.3 HP_UNITDATA.indication

This primitive transfers the symbol data stream to MAC from H-MUX.

Documents
Document Sharing Hub
Full document details: ISO_IEC 9314-8_1998

6.3.3.1 Semantics of the primitive

```
HP_UNITDATA.indication        (
                              HP_Indication(symbol)
                              )
```

The symbol specified by HP_Indication (symbol) shall be one of the following:

H, I, J, K, L, n, R, S, T and optionally Q or V, from the set of symbols defined in the FDDI standard on PHY (see ISO 9314-1 and ISO/IEC 9314-7).

6.3.3.2 When generated

H-MUX shall generate a HP_UNITDATA.indication for each symbol received from PHY in Basic mode, and for each Packet Data Channel symbol in Hybrid mode. This indication shall be generated once every symbol period in Basic mode. Since the Packet Data Channel is byte interleaved with other information in Hybrid mode, MAC shall be capable of processing intermittent pairs of indications in Hybrid mode.

6.3.3.3 Effect of receipt

Upon receipt of this primitive, MAC shall accept a symbol from H-MUX, process it, and generate a corresponding HP_UNITDATA.request to H-MUX, conveying the resulting output symbol.

6.3.4 HP_INVALID.indication

This primitive indicates to MAC that continuity of the received symbol stream has been compromised.

6.3.4.1 Semantics of the primitive

```
HP_INVALID.indication         (
                              HP_Invalid
                              )
```

The HP_Invalid parameter shall indicate that the HP_UNITDATA.indication symbol stream is invalid.

6.3.4.2 When generated

H-MUX shall generate this primitive whenever it does not have a valid symbol stream to present to MAC.

6.3.4.3 Effect of receipt

Receipt of this primitive by MAC shall cause the MAC receiver to enter State R0, and to abort the processing of any PDU currently being received.

6.3.5 HP_MODE.request

The function of this primitive is to allow the MAC to force basic mode for the transmission of MAC recovery frames (*e.g.* Claim and Beacon).

Documents
Document Sharing Hub
Full document details: ISO_IEC 9314-8_1998

6.3.5.1 Semantics of the Primitive:

```
HP_MODE.request          (
                         HP_mode(mode)
                         )
```

The HP_mode parameter shall be set to ‘any’ to allow normal Hybrid operation, and to ‘basic’ to force basic mode operation during the transmission of MAC recovery frames.

6.3.5.2 When Generated:

MAC continuously sends an indication of its mode to the local H-MUX entity. MAC shall allow normal H-MUX operation except during transmission of MAC frames during ring recovery. MAC shall assert HP_mode(any) except during Transmitter states T4 and T5. In state T4, the Claim actions specify the setting of HP_mode. MAC shall assert HP_mode(basic) in state T5.

6.3.5.3 Effect of Receipt:

When HP_mode(any) is asserted the H-MUX is free to transmit cycles in the normal manner. When the HP_mode(basic) is asserted the H-MUX shall transmit MAC SDUs in Basic mode.

6.4 MAC-to-SMT services

This subclause specifies the services provided at the interface between the MAC and the Station Management (SMT) entities. The services supplied by the MAC allow the local SMT entity to monitor and control the operation of MAC. The MAC-to-SMT services shall have precedence over the MAC-to-LLC services. Additional detail is provided in ISO/IEC 9314-6 concerning conditions that generate these primitives and SMT actions upon receipt of MAC-generated primitives.

The following primitives are defined:

SM_MA_INITIALIZE_PROTOCOL.request
SM_MA_CONTROL.request
SM_MA_STATUS.indication
SM_MA_UNITDATA.request
SM_MA_UNITDATA.indication
SM_MA_UNITDATA_STATUS.indication
SM_MA_TOKEN.request

All primitives defined in this subclause are mandatory, except the SM_MA_UNITDATA_STATUS.indication and SM_MA_TOKEN.request primitives, which are optional.

The description of each primitive includes a description of the information that is passed between the MAC and the SMT entities.

6.4.1 SM_MA_INITIALIZE_PROTOCOL.request

This primitive is used by SMT to change operational parameters of MAC. The implementation of this primitive shall allow for modification of single parameters. It is not required to change these parameters while MAC is operational in the ring; however, the implementation should minimize disruption of the ring during a parameter change.

Documents
Document Sharing Hub
Full document details: ISO_IEC 9314-8_1998

6.4.1.1 Semantics of the primitive

```
SM_MA_INITIALIZE_PROTOCOL.request    (
                                     my_long_address,
                                     { my_short_address, }
                                     group_MAC_addresses,
                                     { T_Min_value, }
                                     { T_Max_value, }
                                     DM_Min_value,
                                     { TVX_value, }
                                     T_Req_value,
                                     { T_Neg_value, }
                                     T_Pri_value,
                                     )
```

The my_long_address and optional my_short_address parameters are the octet strings that MAC shall use as its individual addresses. Both a long (48-bit) and a short (16-bit) address may be supplied. Full MAC function on an FDDI network requires a non-Null my_long_address. Support of my_short_address is optional.

Each group_MAC_address is an octet string that MAC shall use as a group address. Support for the broadcast address and for independent enabling or disabling of each of the 16 possible SMT group addresses is mandatory. Support for enabling of other group addresses is optional.

NOTE - A group_MAC_address value should only be supplied when the higher-layer protocol entity intended to be accessed via that address is supported by the implementation

T_Min_value specifies the minimum Target Token Rotation Time (TTRT). Support of T_Min_value is optional.

T_Max_value specifies the maximum Target Token Rotation Time (TTRT). Support of T_Max_value is optional.

DM_Min_value specifies the minimum duplicate MAC frame detection delay.

TVX_value specifies the Valid-Transmission Timer (TVX) expiration value. Support of TVX_value is optional.

T_Req_value specifies the requested TTRT.

T_Neg_value specifies the negotiated TTRT. Direct initialization of this parameter through this primitive is optional since it is normally set through the Claim or Purge process.

T_Pri_value specifies an optional set of priority Token Rotation Time thresholds.

6.4.1.2 When generated

This primitive is generated by SMT whenever it requires MAC to initialize or modify operational parameters.

6.4.1.3 Effect of receipt

Receipt of this primitive shall cause MAC to establish the values of its addresses, and other operational parameters. Prior to any SM_MA_INITIALIZE_PROTOCOL.request primitive, all parameters shall assume their default values, and my_long_address and my_short_address shall both be disabled.

Documents
Document Sharing Hub
Full document details: ISO_IEC 9314-8_1998

6.4.2 SM_MA_CONTROL.request

This primitive has local significance and is used by SMT to control the operation of MAC. The implementation of this primitive shall allow for modification of individual control actions listed below.

6.4.2.1 Semantics of the primitive

```
SM_MA_CONTROL.request        (
                             control_action,
                             mac_frame_information,
                             requested_status
                             )
```

The control_action parameter values shall include: send_mac_frames, reset_mac, control_MAC_recovery, reset_frame_counters, present_status, control_MA_UNITDATA_request, and optionally control_MA_UNITDATA_indication.

The control action send_mac_frames shall include Beacon and Claim. The mac_frame_information parameter shall specify the DA field and the Information field for use when transmitting Beacon frames, or the Information field for use when transmitting Claim frames. An implementation shall be capable of accepting a mac_frame_information parameter specifying at least 64 octets of Information field for continuous transmission in Transmitter State T4 (Claim Token, see 8.4.5) or State T5 (Transmit Beacon, see 8.4.6).

> WARNING - To assure stable MAC protocol behaviour, the maximum length of the MAC frames (including preamble) continuously transmitted in States T4 and T5 should be significantly less than T_Max / (N x M_Max). For more information, see annex D.

The control action reset_mac specifies reset of the MAC state machines.

The control action control_MAC_recovery shall specify full or partial recovery functions in the Transmitter.

The control action reset_frame_counters shall include the MAC counters Frame_ct, Error_ct, Lost_ct, and (if implemented) Copied_ct, Transmit_ct, Not_Copied_ct and Token_ct.

The control action present_status shall cause generation of a SM_MA_STATUS.indication that includes the requested_status.

The control action control_MA_UNITDATA.request shall specify enable or disable of: all requests, synchronous requests, and restricted requests.

The control action control_MA_UNITDATA.indication may optionally be implemented to enhance the frame copy capability of a MAC. Options may include indicate on all frames, indicate on own frame, indicate on all group addresses, or no indicate on secondary NSA.

6.4.2.2 When generated

This primitive is generated by SMT to cause MAC to take the specified control action.

6.4.2.3 Effect of receipt

Receipt of this primitive by MAC shall cause it to take the following actions:

a) If the control action is reset_mac, then MAC shall

Documents
Document Sharing Hub
Full document details: ISO_IEC 9314-8_1998

1) Generate the MAC_Reset signal.

2) Enter Receiver State R0 (Listen).

3) Enter Transmitter State T0 (Transmit Idle).

b) If the control action is send_mac_frames (beacon), then MAC shall reset the Transmitter state machine and enter State T5 (Transmit Beacon). The Late_Ct and the D_Flag are not reset. The Beacon Frames shall be transmitted with the DA field, the first octet of the Information field (Beacon Type), and any octets after the fourth octet of the Information field specified by the mac_frame_information parameter.

c) If the control action is send_mac_frames (claim), then MAC shall reset the Transmitter state machine and enter State T4 (Claim Token). The Late_Ct and the D_Flag are not reset. The Claim Frames shall be transmitted with any octets after the fourth octet of the Information field specified by the mac_frame_information parameter.

d) If the control action parameter is control_MAC_recovery and the request specifies:

1) enable full recovery, then the Transmitter shall perform all token and ring recovery functions;

2) enable partial recovery, then the Transmitter shall ignore token and ring recovery signals from the Receiver, i.e. signals generated by the Receiver upon receipt of a valid Token or MAC frame, and TVX expired. This permits transmission of MAC or SMT PDUs without interference from upstream stations. Received frames may optionally be repeated when the Transmitter is idle; however, received tokens shall be stripped.

e) If the control action parameter is reset_frame_counters, then MAC shall reset all indicated counters.

f) If the control_action is present_status, then MAC shall generate an SM_MA_STATUS.indication to SMT that includes the status indicated by the requested_status parameter.

g) If the control action is control_MA_UNITDATA.request and the request specifies:

1) enable all requests, then MAC shall transmit all valid MA_UNITDATA.requests presented to it;

2) disable all requests, then MAC shall not transmit any MA_UNITDATA.requests presented to it;

3) enable synchronous requests, then MAC shall transmit all valid MA_UNITDATA.requests with requested_service_class of synchronous presented to it. Support of this function is required if the optional synchronous transmission capability is supported;

4) disable synchronous requests, then MAC shall not transmit any MA_UNITDATA.requests with requested_service_class of synchronous presented to it;

5) enable restricted requests, then MAC shall transmit all valid MA_UNITDATA.requests with requested_token_class or issued_token_class of restricted presented to it. Support of this function is required if the optional restricted token mode transmission capability is supported;

Documents
Document Sharing Hub

Full document details: ISO_IEC 9314-8_1998

6) disable restricted requests, then MAC shall not transmit any MA_UNITDATA.requests with requested_token_class or issued_token_class of restricted presented to it.

This control action does not affect operation of the SM_MA_UNITDATA.request service.

h) If the control action is control_MA_UNITDATA.indication (optional) and the request specifies:

1) Indicate on all frames shall cause the MAC to promiscuously copy and generate an (SM_)MA_UNITDATA.indication on all frames independent of matching the Destination Address.

2) Indicate on all group addresses shall cause the MAC to copy and generate an (SM_)MA_UNITDATA.indication on all frames independent of matching the Destination Address if the Destination Address is a group address.

Indicate on all frames or indicate on all group addresses shall not expand the set of addresses included in Short_Addresses or Long_Addresses. Therefore, the A indicator shall only be set by a MAC if the DA of a frame is explicitly included in the set of Short_Addresses or Long_Addresses supplied via the SM_MA_INITIALIZE_PROTOCOL.request.

3) No indicate on own frame shall prevent the copy and generation of an (SM_)MA_UNITDATA.indication on frames with the Source Address equal to the MAC's individual address.

4) No indicate on secondary NSA shall prevent the copy and generation of an SM_MA_UNITDATA.indication on frames where the FC field indicates an SMT Next Station Addressing frame and the A indicator is received as S.

5) No indicate on duplicate MAC shall prevent the copy and generation of an SM_MA_UNITDATA.indication on frames where the FC field indicates a MAC frame and no difference was detected from the previous copied MAC frame with the same FC value before the fifth octet of the Information field.

6) No indicate on MAC frames shall prevent the copy and generation of an SM_MA_UNITDATA.indication on frames where the FC field indicates a MAC frame.

7) Indicate on bad frames shall cause the MAC to generate an (SM_)MA_UNITDATA.indication on all frames that would otherwise be copied, but that fail the frame validity criteria (see 8.3.1). If this function is not selected, then invalid frames are ignored.

6.4.3 SM_MA_STATUS.indication

This primitive is used by MAC to inform the local SMT entity of requested current status, or errors and significant status changes detected by MAC.

6.4.3.1 Semantics of the primitive

```
SM_MA_STATUS.indication        (
                               Status_report
                               )
```

The status_report parameter shall specify appropriate status including the following:

a) Any change of Ring_Operational status.

Documents
Document Sharing Hub
Full document details: ISO_IEC 9314-8_1998