INTERNATIONAL STANDARD

ISO/IEC 9594-4

First edition
1990-12-15

Information technology — Open Systems Interconnection — The Directory —

Part 4:
Procedures for distributed operation

Technologies de l'information — Interconnexion de systèmes ouverts — L'annuaire —

Partie 4: Procédures pour le fonctionnement réparti

Reference number
ISO/IEC 9594-4 : 1990 (E)

AVA Documents
Document Sharing Hub

Full document details: ISO_IEC 9594-4_1990

Contents

Page

Foreword v

Introduction vi

SECTION 1: GENERAL 1

1 Scope 1

2 Normative references 1

3 Definitions 1

3.1 OSI Reference Model Definitions 1

3.2 Basic Directory Definitions 1

3.3 Directory Model Definitions 2

3.4 Abstract Service Definition Conventions 2

3.5 Distributed Operation Definitions 2

4 Abbreviations 3

5 Notation 3

SECTION 2: OVERVIEW 3

6 Overview 3

SECTION 3: DISTRIBUTED DIRECTORY MODELS 3

7 Distributed Directory System Model 3

8 DSA Interactions Model 4

8.1 Chaining 4

8.2 Multi-casting 5

8.3 Referral 5

8.4 Mode Determination 6

9 Directory Distribution 6

© ISO/IEC 1990
All rights reserved. No part of this publication may be reproduced or utilized in any form or by any means, electronic or mechanical, including photocopying and microfilm, without permission in writing from the publisher.

ISO/IEC Copyright Office • Case postale 56 • CH-1211 Genève 20 • Switzerland
Printed in Switzerland

Documents
Document Sharing Hub

Full document details: ISO_IEC 9594-4_1990

10 Knowledge 7
10.1 Minimal Knowledge References 8
10.2 Root Context 8
10.3 Knowledge References 8
10.4 Knowledge Administration 9
SECTION 4: DSA ABSTRACT SERVICE 10
11 Overview of DSA Abstract Service 10
12 Information Types 11
12.1 Introduction 11
12.2 Information Types Defined Elsewhere 11
12.3 Chaining Arguments 11
12.4 Chaining Results 12
12.5 Operation Progress 12
12.6 Trace Information 13
12.7 Reference Type 13
12.8 Access Point 13
12.9 Continuation Reference 13
13 Abstract-bind and Abstract-unbind 14
13.1 DSA Bind 14
13.2 DSA Unbind 14
14 Chained Abstract-operations 14
15 Chained Abstract-errors 15
15.1 Introduction 15
15.2 DSA Referral 15
SECTION 5: DISTRIBUTED OPERATIONS PROCEDURES 16
16 Introduction 16
16.1 Scope and Limits 16
16.2 Conceptual Model 16
16.3 Individual and Cooperative Operation of DSAs 16
17 Distributed Directory Behavior 16
17.1 Cooperative Fulfillment of Operations 16
17.2 Phases of Operation Processing 16
17.3 Managing Distributed Operations 17
17.4 Other Considerations for Distributed Operation 18
17.5 Authentication of Distributed Operations 19
18 DSA Behavior 19
18.1 Introduction 19

AVA Documents
Document Sharing Hub

Full document details: ISO_IEC 9594-4_1990

18.2 Overview of the DSA Behavior 19
18.3 Specific Operations 21
18.4 Operation Dispatcher 22
18.5 Looping 24
18.6 Name Resolution Procedure 25
18.7 Object Evaluation Procedures 30
18.8 Result Merging Procedure 33
18.9 Procedures for Distributed Authentication 33
Annex A — ASN.1 for Distributed Operations 35
Annex B — Modelling of Knowledge 39
Annex C — Distributed Use of Authentication 43
Annex D — Distributed Directory Object Identifiers 46

Documents
Document Sharing Hub
Full document details: ISO_IEC 9594-4_1990

Foreword

ISO (the International Organization for Standardization) and IEC (the International Electrotechnical Commission) form the specialized system for worldwide standardization. National bodies that are members of ISO or IEC participate in the development of International Standards through technical committees established by the respective organization to deal with particular fields of technical activity. ISO and IEC technical committees collaborate in fields of mutual interest. Other international organizations, governmental and non-governmental, in liaison with ISO and IEC, also take part in the work.

In the field of information technology, ISO and IEC have established a joint technical committee, ISO/IEC JTC 1. Draft International Standards adopted by the joint technical committee are circulated to national bodies for voting. Publication as an International Standard requires approval by at least 75 % of the national bodies casting a vote.

International Standard ISO/IEC 9594-4 was prepared by Joint Technical Committee ISO/IEC JTC 1, *Information technology*.

ISO/IEC 9594 consists of the following parts, under the general title *Information technology — Open Systems Interconnection — The Directory*:

— *Part 1: Overview of concepts, models and services*

— *Part 2: Models*

— *Part 3: Abstract service definition*

— *Part 4: Procedures for distributed operation*

— *Part 5: Protocol specifications*

— *Part 6: Selected attribute types*

— *Part 7: Selected object classes*

— *Part 8: Authentication framework*

Annexes A and D form an integral part of this part of ISO/IEC 9594. Annexes B and C are for information only.

Documents
Document Sharing Hub

Full document details: ISO_IEC 9594-4_1990

Introduction

0.1 This part of ISO/IEC 9594, together with the other parts, has been produced to facilitate the interconnection of information processing systems to provide directory services. The set of all such systems, together with the directory information which they hold, can be viewed as an integrated whole, called the *Directory*. The information held by the Directory, collectively known as the Directory Information Base (DIB), is typically used to facilitate communication between, with or about objects such as OSI application entities, people, terminals and distribution lists.

0.2 The Directory plays a significant role in Open Systems Interconnection, whose aim is to allow, with a minimum of technical agreement outside of the interconnection standards themselves, the interconnection of information processing systems:

- from different manufacturers;
- under different managements;
- of different levels of complexity; and
- of different ages.

0.3 This part of ISO/IEC 9594 specifies the procedures by which the distributed components of the Directory interwork in order to provide a consistent service to its users.

Documents
Document Sharing Hub
Full document details: ISO_IEC 9594-4_1990

Information technology — Open Systems Interconnection — The Directory —

Part 4:
Procedures for distributed operation

SECTION 1: GENERAL

1 Scope

1.1 This Part of ISO/IEC 9594 specifies the behavior of DSAs taking part in the distributed Directory application. The allowed behavior has been designed so as to ensure a consistent service given a wide distribution of the DIB across many DSAs.

1.2 The Directory is not intended to be a general purpose database system, although it may be built on such systems. It is assumed that there is a considerably higher frequency of queries than of updates.

2 Normative references

The following standards contain provisions which, through reference in this text, constitute provisions of this part of ISO/IEC 9594. At the time of publication, the editions indicated were valid. All standards are subject to revision, and parties to agreements based on this part of ISO/IEC 9594 are encouraged to investigate the possibility of applying the most recent editions of the standards listed below. Members of IEC and ISO maintain registers of currently valid International Standards.

ISO 7498:1984, *Information Processing Systems — Open Systems Interconnection — Basic Reference Model.*

ISO/IEC 8824:1990, *Information Technology — Open Systems Interconnection — Specification of Abstract Syntax Notation One (ASN.1).*

ISO/IEC 9594-1:1990, *Information Technology — Open Systems Interconnection — The Directory — Part 1: Overview of Concepts, Models and Services.*

ISO/IEC 9594-2:1990, *Information Technology — Open Systems Interconnection — The Directory — Part 2: Models.*

ISO/IEC 9594-3:1990, *Information Technology — Open Systems Interconnection — The Directory — Part 3: Abstract Service Definition.*

ISO/IEC 9594-5:1990, *Information Technology — Open Systems Interconnection — The Directory — Part 5: Protocol Specifications.*

ISO/IEC 9594-6:1990, *Information Technology — Open Systems Interconnection — The Directory — Part 6: Selected Attribute Types.*

ISO/IEC 9594-7:1990, *Information Technology — Open Systems Interconnection — The Directory — Part 7: Selected Object Classes.*

ISO/IEC 9594-8:1990, *Information Technology — Open Systems Interconnection — The Directory — Part 8: Authentication Framework.*

ISO/IEC 10021-3:1990, *Information Technology — Text Communication — Message Oriented Text Interchange System (MOTIS) — Part 3: Abstract Service Definition Conventions.*

3 Definitions

The definitions contained in this clause make use of the abbreviations defined in clause 4.

3.1 OSI Reference Model Definitions

This part of the International Standard makes use of the following terms defined in ISO 7498:

a) application entity title;

3.2 Basic Directory Definitions

This part of ISO/IEC 9594 makes use of the following terms defined in ISO/IEC 9594-1:

a) *(the) Directory*;

b) *Directory Information Base*;

AVA Documents Document Sharing Hub

Full document details: ISO_IEC 9594-4_1990

3.3 Directory Model Definitions

This part of ISO/IEC 9594 makes use of the following terms defined in ISO/IEC 9594-2:

a) *access point;*

b) *alias;*

c) *distinguished name*;

d) *Directory Information Tree* ;

e) *Directory System Agent*;

f) *Directory User Agent*;

g) *relative distinguished name*;

3.4 Abstract Service Definition Conventions

This part of ISO/IEC 9594 makes use of the following terms defined in ISO/IEC 10021-1:

a) *abstract error ;*

b) *abstract operation;*

c) *result;*

3.5 Distributed Operation Definitions

For the purpose of this part of ISO/IEC 9594 the following definitions apply:

3.5.1 *chaining* : A mode of interaction optionally used by a DSA which cannot perform an operation itself. The DSA *chains* by invoking an operation of another DSA and then relaying the outcome to the original requestor.

3.5.2 *context prefix* : The sequence of RDNs leading from the Root of the DIT to the initial vertex of a naming context, corresponds to the distinguished name of that vertex.

3.5.3 *cross reference* : A knowledge reference containing information about the DSA that holds an entry. This is used for optimization. The entry need have no superior or subordinate relationship.

3.5.4 *DIB fragment* : The portion of the DIB that is held by one DSA, comprising one or more naming contexts.

3.5.5 *distributed name resolution* : The process by which name resolution is performed in more than one DSA.

3.5.6 *internal reference* : A knowledge reference containing an internal pointer to an entry held in the same DSA.

3.5.7 *knowledge information* : the information which a particular DSA has about the entries it holds and how to locate other entries in the directory.

3.5.8 *knowledge reference*: Knowledge which associates, either directly or indirectly, a DIT entry with the DSA in which it is located.

3.5.9 *knowledge tree*: The conceptual model of the knowledge information that a DSA holds to enable it to perform distributed name resolution.

3.5.10 *multicasting*. A mode of interaction which may optionally be used by a DSA which cannot perform an operation itself. The DSA *multicasts* the operation, i.e., invokes the same operation of several other DSAs (in series or in parallel) and passes an appropriate outcome to the original requestor.

3.5.11 *name resolution* : The process of locating an entry by sequentially matching each RDN in a purported name to a vertex of the DIT.

3.5.12 *naming context* : A partial sub tree of the DIT which starts at a vertex and extends downwards to leaf and/or non-leaf vertices. Such vertices constitute the border of the naming context. Subordinates of non-leaf vertices belonging to the border denote the start of further naming contexts.

3.5.13 *non-specific subordinate reference* : A knowledge reference that holds information about the DSA that holds one or more unspecified subordinate entries.

3.5.14 *operation progress*: A set of values which denotes the extent to which name resolution has taken place.

3.5.15 *reference path*: A continues sequence of knowledge references.

3.5.16 *referral*: An outcome which can be returned by a DSA which cannot perform an operation itself, and which identifies one or more other DSAs more able to perform the operation.

3.5.17 *request decomposition*: Decomposition of a request into subrequests each accomplishing a part of the distributed operation.

3.5.18 *root context*: The naming context for the vertex whose name comprises the empty sequence of RDNs.

3.5.19 *subordinate reference*: A knowledge reference containing information about the DSA that holds a specific subordinate entry.

3.5.20 *subrequest*: A request generated by request decomposition.

3.5.21 *superior reference*: A knowledge reference containing information about the DSA that holds a superior entry.

Documents
Document Sharing Hub
Full document details: ISO_IEC 9594-4_1990

4 Abbreviations

The following abbreviations are used in this part of ISO/IEC 9594:

DIB Directory Information Base
DIT Directory Information Tree
DSA Directory System Agent
DUA Directory User Agent
RDN Relative Distinguished Name

5 Notation

The notation used in this clause is defined as follows:

a) the data syntax notation, encoding and macro notation are defined in ISO/IEC 8824;

b) the notations for abstract models and abstract services are defined in ISO/IEC 10021-3.

SECTION 2: OVERVIEW

6 Overview

The Directory Abstract Service allows the interrogation, retrieval and modification of Directory information in the DIB. This service is described in terms of the abstract Directory object as specified in ISO/IEC 9594-3.

Necessarily, the specification of the abstract Directory object does not in any way address the physical realization of the Directory: in particular it does not address the specification of Directory System Agents (DSA) within which the DIB is stored and managed, and through which the service is provided. Furthermore, it does not consider whether the DIB is centralized, i.e., contained within a single DSA, or distributed over a number of DSAs. Consequently, the requirements for DSAs to have knowledge of, navigate to, and cooperate with other DSAs, in order to support the abstract service in a distributed environment is also not covered by the service description.

This part of ISO/IEC 9594 specifies the refinement of the abstract Directory object, the refinement being expressed in terms of a set of one or more DSA objects which collectively constitute the distributed directory service. Inherent in this is the identification and specification of the DSA *ports* that are internal to the Directory object. For each such port, this part specifies, the associated abstract service, and its procedures.

In addition this part specifies the permissible ways in which the DIB may be distributed over one or more DSAs. For the limiting case where the DIB is contained within a single DSA, the Directory is in fact centralized; for the case where the DIB is distributed over two or more DSAs, knowledge and navigation mechanisms are specified which ensure that the whole of the DIB is potentially accessible from all DSAs that hold constituent entries.

Additionally, request handling interactions are specified that enable particular operational characteristics of the Directory to be controlled by its users. In particular, the user has control over whether a DSA, responding to a directory enquiry pertaining to information held in other DSA(s), has the option of interrogating the other DSA(s) directly (chaining/multicasting) or, whether it should respond with information about other DSA(s) which could further progress the enquiry (referral).

Generally, the decision by a DSA to chain/multicast or refer is determined by the service controls set by the user, and by the DSA's own administrative, operational, or technical circumstances.

Recognizing that, in general, the Directory will be distributed, that directory enquiries will be satisfied by an arbitrary number of cooperating DSAs which may arbitrarily chain/multicast or refer according to the above criteria, this part of ISO/IEC 9594 specifies the appropriate procedures to be effected by DSAs in responding to distributed directory enquiries. These procedures will ensure that users of the distributed Directory service perceive it to be both user-friendly and consistent.

SECTION 3: DISTRIBUTED DIRECTORY MODELS

7 Distributed Directory System Model

The Directory abstract service as defined in ISO/IEC 9594-3 models the directory as an object which provides a set of directory services to its users. The services of the directory are modelled in terms of ports, where each port provides a particular set of directory services. Users of the directory access its services through an access point. The directory may have one or more access points and each access point is characterized by the

AVA Documents
Document Sharing Hub

Full document details: ISO_IEC 9594-4_1990

services it provides and the mode of interaction used to provide these services.

This clause addresses the internal structure of the directory object, identifying its constituent objects and their ports, and thereby facilitates the specification of a distributed directory service.

Figure 1 illustrates the distributed directory model which will be used as the basis for specifying the distributed aspects of the directory. It illustrates the directory object as comprising a set of one or more DSA objects.

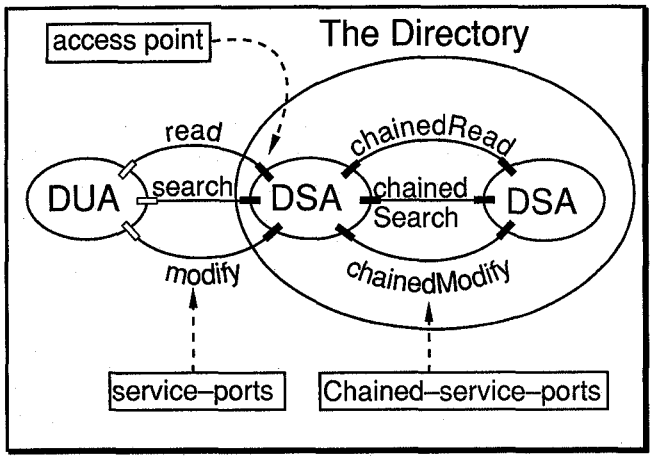

Figure 1 — Objects of the Distributed Directory Model

DSA objects are specified in detail in the subsequent clauses of this part of ISO/IEC 9594. This clause merely states a number of their characteristics in order to serve as an introduction and to establish the relationship between this part and other parts of ISO/IEC 9594.

DSA objects are defined in order that distribution of the DIB can be accommodated and that a number of physically distributed DSAs can interact in a prescribed, cooperative manner to provide directory services to the users of the directory (DUAs).

DSA objects, like the Directory object, are characterized by their externally visible ports. The ports associated with a DSA object are of two types: service-ports and chained-service-ports.

The service-ports of a DSA object are identical to those of the Directory object, namely, **read**, **search**, and **modify**. Figure 1 illustrates that the service-ports associated with a DSA object constitute an access-point through which directory services are made available.

The detailed specification of the **read**, **search**, and **modify** service-ports of the DSA object can be found in ISO/IEC 9594-3. (The protocol specification for the corresponding OSI application service elements, as derived from these port definitions, can be found in ISO/IEC 9594-5).

In addition to the service-ports of the DSA object which accommodate access to the Directory object, a second set of ports are defined, the chained-service-ports. These permit inter-DSA communication in order that the Directory abstract service can be realized in a distributed environment.

The chained-service-ports and the operations provided through them are in direct correspondence to the similarly named service-ports, and are, respectively, **chainedRead**, **chainedSearch**, and **chainedModify**.

The process of specifying the constituent objects of a more abstract object is termed "refinement". The specification of the refinement of the Directory object into its component parts (the DSAs), and the specification of the abstract service provided by each of them (the DSA Abstract Service) is contained in Section Four of this part of ISO/IEC 9594. (The protocol specification of the corresponding OSI application service elements, as derived from the distributed port definitions, can be found in ISO/IEC 9594-5).

8 DSA Interactions Model

A basic characteristic of the Directory is that, given a distributed DIB, a user should potentially be able to have any service request satisfied (subject to security, access control and administrator policies) irrespective of the access point at which the request originates. In accommodating this requirement it is necessary that any DSA involved in satisfying a particular service request have some knowledge (as specified in clause 10 of this part of ISO/IEC 9594) of where the requested information is located and either return this knowledge to the requestor or attempt to have the request satisfied on its behalf. (The requestor may either be a DUA or another DSA: in the latter case both DSAs shall have a chained-service-port).

Three modes of DSA interaction are defined to meet these requirements, namely "chaining", "multicasting", and "referral". "Chaining" and "multicasting"are defined to meet the latter of the above requirements whilst referrals address the former.

8.1 Chaining

This mode of interaction (depicted in figure 2) may be used by one DSA, to pass on a request to another DSA when the former has knowledge about naming contexts held by the latter. Chaining may be used to contact a single DSA pointed to in a cross reference, a subordinate reference, or a superior reference. Multicasting is a form of chaining, described in 8.2.

Documents
Document Sharing Hub
Full document details: ISO_IEC 9594-4_1990

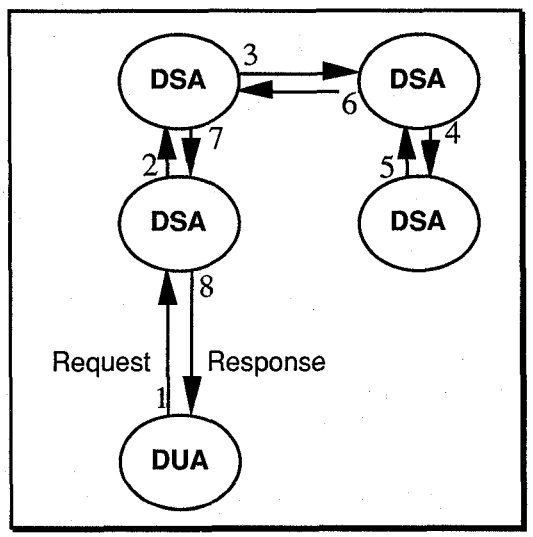

Figure 2 — Chaining mode

Note - In figure 2, the order of interactions is defined by the numbers associated with the interaction lines.

8.2 Multi-casting

This mode of interaction (depicted in figures 3a and 3b) may be used by a DSA, to chain an identical request in parallel (figure 3a) or sequential (figure 3b) to one or more other DSAs, when the former does not know the complete naming contexts held by the other DSAs. Multi-casting is only used by a DSA to contact other DSAs pointed to in a non-specific subordinate reference. Each of the DSAs is passed the identical request. Normally, during name resolution, only one of the DSAs will be able to continue processing the request, all of the others returning the **unable to proceed Service Error**. However, during the evaluation phase of **Search** and **List** operations, all the DSAs in a non-specific subordinate reference should be able to continue processing the request.

Note - In figures 3a and 3b the order of interactions is defined by the numbers associated with the interaction lines.

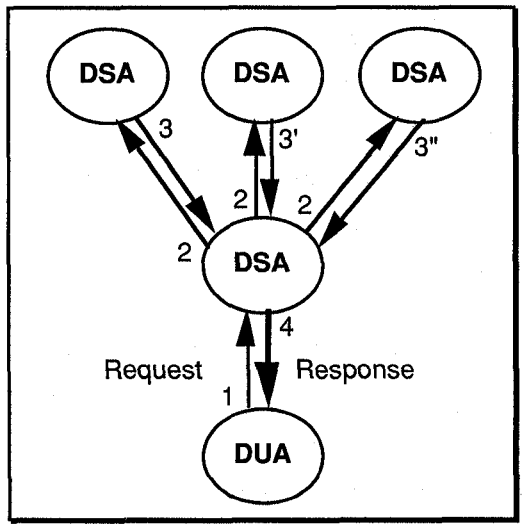

Figure 3a — Multicasting mode (parallel)

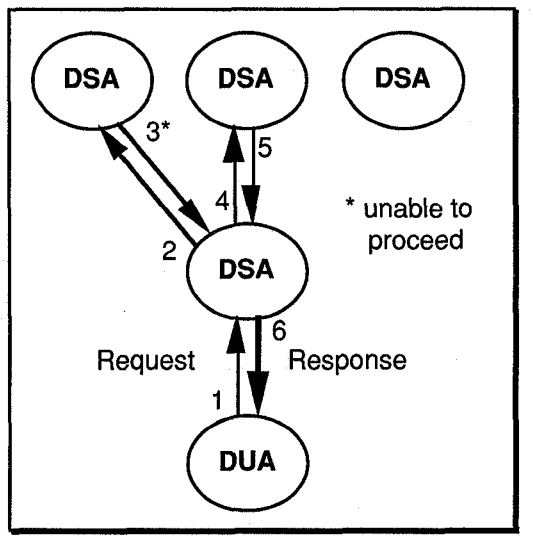

Figure 3b — Multicasting mode (sequential)

8.3 Referral

A referral (depicted in figures 4a and 4b) is returned by a DSA in its response to a request which it had been requested to perform, either by a DUA, or by another DSA (in which case both DSAs shall have a chained-service-port). The referral may constitute the whole response (in which case it is categorized as an error) or just part of the response. The referral contains a knowledge reference, which may be either a superior, subordinate, cross or non-specific subordinate reference.

The DSA (figure 4a) receiving the referral may use the knowledge reference contained therein, to subsequently chain or multi-cast (depending upon the type of reference) the original request to other DSAs. Alternatively, a DSA receiving a referral, may in turn pass the referral back in its response. A DUA (figure 4b) receiving a referral may use it to contact one or more other DSAs to progress the request.

AVA Documents
Document Sharing Hub

Full document details: ISO_IEC 9594-4_1990

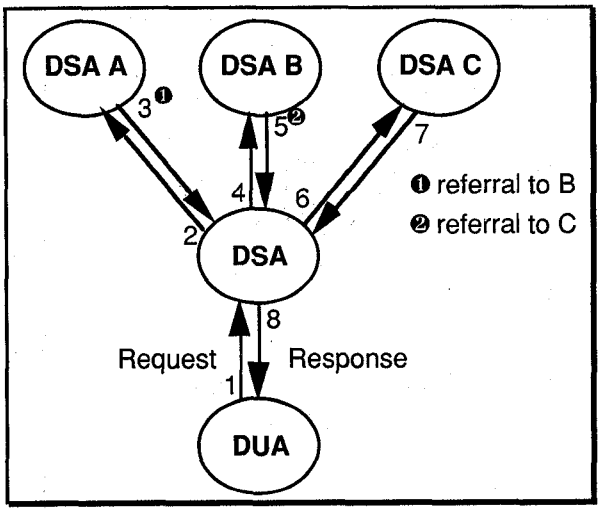

Figure 4a — Referral mode (DSA with chained-service-port)

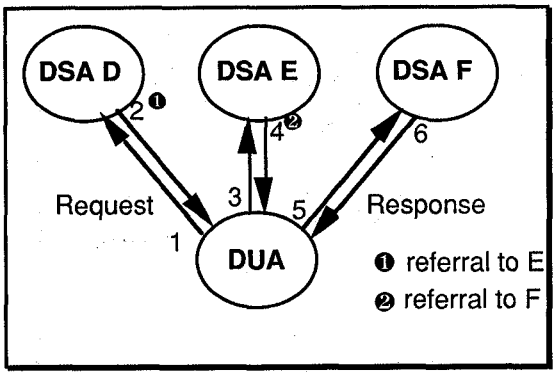

Figure 4b — Referral mode (DUA requests — DSAs with no chained ports)

Note - In figures 4a and 4b, the order of interactions is defined by the numbers associated with the interaction lines.

8.4 Mode Determination

If a DSA cannot itself fully resolve a request, it shall chain/multicast the request (or a request formed by decomposing the original one), to another DSA, unless:

a) chaining is prohibited by the user via the service controls, in which case the DSA shall return a referral or a **chainingRequired ServiceError** (at its choice), or

b) the DSA has administrative, operational, or technical reasons for preferring not to chain, in which case the DSA shall return a referral.

Notes

1 A "technical reason" for not chaining/multicasting is that the DSA identified in the knowledge reference has no chained-service-ports.

2 If the **localScope** service control is set, then the DSA (or DMD) shall either resolve the request or return an error.

3 If the user prefers referrals, the user should set **chainingProhibited**.

9 Directory Distribution

This clause defines the principles according to which the DIB can be distributed.

Each entry within the DIB is administered by one, and only one, DSA's Administrator who is said to have administrative authority for that entry. Maintenance and management of an entry shall take place in a DSA administered by the administrative authority for the entry.

Although the Directory does not provide any support for the replication of entries, it is nevertheless possible to realize replication in two ways.

- Copies of an entry may be stored in other DSA(s) through bilateral agreement. The means by which these copies are maintained and managed is a function of the bilateral agreement and is not defined in this part of ISO/IEC 9594.

- Copies of an entry may be acquired by storing (locally and dynamically) a copy of an entry which results from a request.

Note — The acquisition of cache entries is subject to access control.

The originator of the request is informed (via **fromEntry**) as to whether information returned in response to a request is from a replicated entry or not. A service control, **dontUseCopy**, is defined which allows the user to prohibit the use of replicated entries.

Each DSA within the Directory holds a *fragment* of the DIB. The DIB fragment held by a DSA is described in terms of the DIT and comprises one or more naming contexts. A *naming context* is a partial subtree of the DIT defined as starting at a vertex and extending downwards to leaf and/or non-leaf vertices. Such vertices constitute the border of the naming context. Subordinates of the non-leaf vertices belonging to the border denote the start of further naming contexts.

It is possible for a DSA's administrator to have administrative authority for several disjoint naming contexts. For every naming context for which a DSA has administrative authority, it shall logically hold the sequence of RDNs which lead from the root of the DIT to the initial vertex of the subtree comprising the naming context. This sequence of RDNs is called the *context prefix*.

A DSA's administrator may delegate administrative authority for any immediate subordinates of any entry held locally to another DSA. A DSA that delegated authority is called a *superior DSA* and the context that holds the superior entry of one for which the administrative authority was delegated, is called the *superior naming context*. Delegation of administrative authority begins with

AVA Documents
Document Sharing Hub
Full document details: ISO_IEC 9594-4_1990

the root and proceeds downwards in the DIT; that is, it can only occur from an entry to its subordinates.

Figure 5 illustrates a hypothetical DIT logically partitioned into five naming contexts (named A, B, C, D and E), which are physically distributed over three DSAs (DSA1, DSA2, and DSA3).

From the example it can be seen that the naming contexts held by particular DSAs may be configured so as to meet a wide range of operational requirements. Certain DSAs may be configured to hold those entries that represent higher level naming domains within some logical part(s) of the DIB, the organizational structure of a large company say, but not necessarily all the subordinate entries. Alternatively, DSAs may be configured to hold only those naming contexts representing primarily leaf entries.

From the above definitions, the limiting case for a naming context can be either a single entry or the whole of the DIT.

Whilst the logical to physical mapping of the DIT onto DSAs is potentially arbitrary, the task of information location and management is simplified if the DSAs are configured to hold a small number of naming contexts.

In order for a DUA to begin processing a request it shall hold some information, specifically the presentation address, about at least one DSA that it can contact initially. How it acquires and holds this information is a local matter.

During the process of modification of entries it is possible that the directory may become inconsistent. This will be particularly likely if modification involves aliases or aliased objects which may be in different DSAs. The inconsistency shall be corrected by specific administrator action, for example to delete aliases if the corresponding aliased objects have been deleted. The Directory continues to operate during this period of inconsistency.

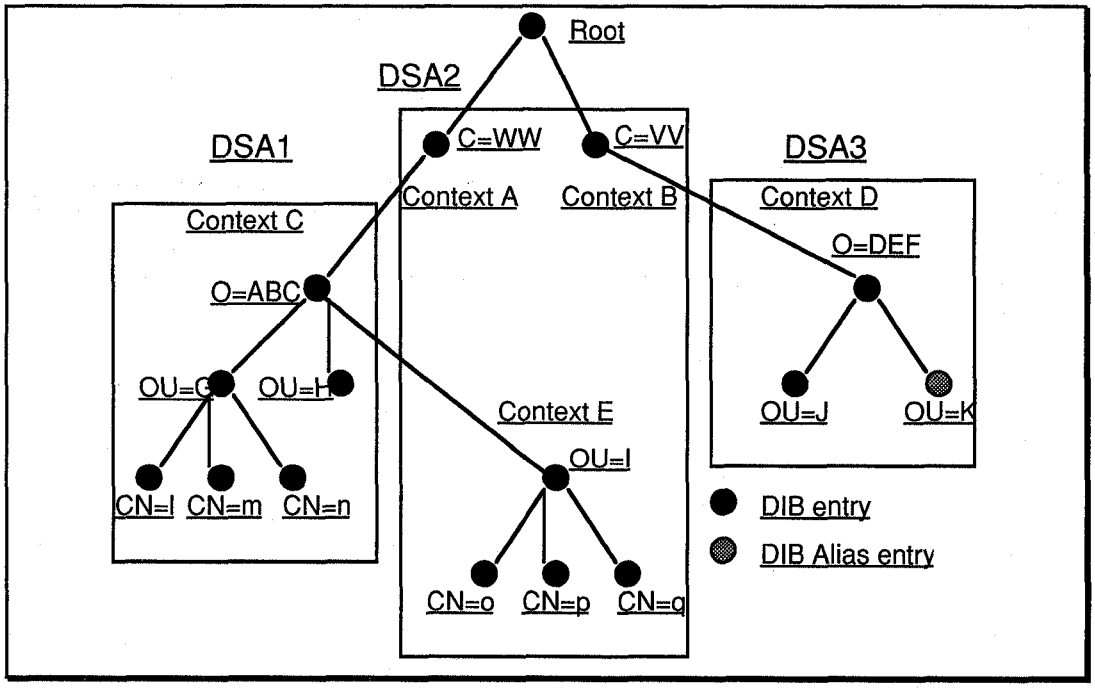

Figure 5 — Hypothetical DIT

Note — The Root is not held by any DSA, however some indication shall exist at the local level to distinguish those vertices (e.g., C=VV, C=WW) which are immediate subordinates of the Root.

10 Knowledge

The DIB is potentially distributed across multiple DSAs with each DSA holding a DIB fragment; the principles that govern distribution of the DIB are specified in clause 9 of this part of ISO/IEC 9594.

It is a requirement of the Directory that, for particular modes of user interaction, the distribution of the directory be rendered transparent, thereby giving the effect that the whole of the DIB appears to be within each and every DSA.

In order to support the operational requirements described above, it is necessary that each DSA holding a fragment of

AVA Documents
Document Sharing Hub

Full document details: ISO_IEC 9594-4_1990

the DIB be able to identify and optionally interact with other fragments of the DIB held by other DSAs.

This clause defines knowledge as the basis for the mapping of a name to its location within a fragment of the DIT.

Conceptually DSAs hold two types of information:

a) Directory Information

b) Knowledge Information

Directory Information is the collection of entries comprising the Naming Context(s) for which the Administrator of a particular DSA has Administrative Authority.

Knowledge Information embodies the Naming Context(s) held by a particular DSA and denotes how these fit into the overall DIT hierarchy. Name Resolution, the process of locating the DSA which has Administrative Authority for a particular entry given that entry's name, is based on knowledge information.

A *Context Prefix* is the sequence of RDNs leading from the Root of the DIT to the initial vertex of a naming context and corresponds to the distinguished name of that vertex.

A *Naming Context* comprises a collection of knowledge references and a Context Prefix. A Naming Context shall contain exactly the following knowledge references:

- All the internal references which define the internal structure of the portion of the DIT included in the Naming Context.
- All the subordinate and non-specific subordinate references to other Naming Contexts.

10.1 Minimal Knowledge References

It is a property of the Directory that each entry can be accessed independently of where a request is generated.

To accomplish this, each DSA shall at least maintain the following knowledge references:

- subordinate references as defined in 10.3.2 and/or non-specific subordinate references as defined in 10.3.5; and
- superior references as defined in 10.3.3.

It is then possible to establish a reference path, as a continuous sequence of knowledge references, to all naming contexts within the Directory.

Optionally, cross references, as defined in 10.3.4, may form part of a reference path to optimize performance.

10.2 Root Context

Because of the autonomy of the different countries or global organizations, there is likely to be no 'single' DSA which holds the root context. The functionality of a 'root-DSA' concerning the name resolution process has to be provided by those DSAs which have administrative authority for naming contexts that are immediately subordinate to the root. These DSAs are called *First Level DSAs*. Each First Level DSA shall be able to simulate the functionality of the 'root-DSA'. This requires full knowledge about the root naming context. The root context is replicated onto each First Level DSA and therefore has to be administered commonly by the autonomous first level administrative authorities. Administration procedures have to be determined by multilateral agreements outside the scope of this part of ISO/IEC 9594.

- Each first level DSA shall hold the root context, which implies a reference path to each other first level DSA.
- Each non-first level DSA shall have a superior reference, which implies a reference path to any arbitrary first level DSA.

10.3 Knowledge References

The knowledge possessed by a DSA is defined in terms of a set of one or more knowledge references where each reference associates, either directly or indirectly, entries of the DIB with DSAs which hold those entries.

To be able to fulfill the requirements to reach every DIB entry from any DSA, every DSA is required to have knowledge about the entries which it itself holds, and about subordinates and possibly superiors thereof. This gives rise to the following types of knowledge references:

- Internal references
- Subordinate references
- Superior references
- Non-specific subordinate references

Additionally, for optimization purposes the following types of optional references are defined:

- Cross references

In the event that the set of knowledge references associated with a particular DSA contain only internal references, the DSA has no knowledge of other DSAs and the DIB is therefore centralized.

10.3.1 Internal References

An *internal reference* consists of :

- the RDN corresponding to a DIB entry;
- an internal pointer to where the entry is stored in the local DIB. (The specification of this pointer is outside the scope of this part of ISO/IEC 9594).

All entries for which a particular DSA has Administrative Authority are represented by internal references in the knowledge information of that DSA.

Documents
Document Sharing Hub
Full document details: ISO_IEC 9594-4_1990

10.3.2 Subordinate References

A *subordinate reference* consists of

- an RDN corresponding to an immediate subordinate DIB entry;
- the Access Point of the DSA to which Administrative Authority for that entry was delegated.

All subordinate entries held by another DSA to which this DSA has delegated Administrative Authority, shall be represented by subordinate references (or non-specific subordinate references as described in 10.3.5).

10.3.3 Superior References

A *superior reference* consists of

- the Access Point of a DSA.

Each non-first level DSA maintains precisely one superior reference. The superior reference shall form part of a reference path to the root. Unless some method outside the standard is employed to ensure this, for example within a DMD, this shall be accomplished by referring to a DSA which holds a naming context whose context prefix has less RDNs than the context prefix with fewest RDNs held by this DSA.

10.3.4 Cross References

A *cross reference* consists of

- a Context Prefix;
- the Access Point of a DSA which has Administrative Authority for that Naming Context.

This type of reference is optional and serves to optimize Name Resolution. A DSA may hold any number (including zero) of cross references.

10.3.5 Non-specific Subordinate References

A *non-specific subordinate reference* consists of

- the Access Point of a DSA which holds one or more immediately subordinate Naming Contexts.

This type of reference is optional, to allow for the case in which a DSA is known to contain some subordinate entries but the specific RDNs of those entries is not known.

For each naming context which it holds, a DSA may hold any number (including zero) of non-specific subordinate references, which will be evaluated if all specific internal and subordinate references have been pursued. DSAs accessed via a non-specific reference shall be able to resolve the request directly (either success or failure). In the event of failure a **serviceError** reporting a problem of **unableToProceed** is returned to the requestor.

10.4 Knowledge Administration

To operate a widely distributed Directory with an acceptable degree of consistency and performance, procedures are required to maintain and extend the knowledge held by each DSA. The same procedures are appropriate for creating initial knowledge.

Knowledge can be maintained by:

a) The DSA or its administrative authority propagating changes of knowledge to those DSAs holding all kinds of references to it, whenever changes at that DSA cause the references to become invalid. This is the only way superior, subordinate and non-specific subordinate references can be maintained;

b) DSAs requesting and obtaining cross references to improve the performance through ordinary directory operations.

This part of ISO/IEC 9594 does not define any procedures for propagating knowledge changes as described in a). Bilateral agreements shall be established locally for this.

10.4.1 Requesting Cross References

To improve the performance of the Directory System, the local set of cross references can be expanded using ordinary Directory operations. If a DSA has a chained-service-port it may request another DSA (which also shall have a chained-service-port) to return those knowledge references which contain information about the location of naming contexts related to the target object name of an ordinary Directory operation.

If the **returnCrossReferences** component of the **ChainedOperationsArgument** is set to **TRUE**, the **crossReference** component of the **ChainedOperationsResult** may be present, consisting of a sequence of cross reference items.

If a DSA is not able to chain a request to the next DSA a referral is returned to the originating DSA. If the **returnCrossReference** component of **ChainingArguments** was **TRUE**, the referral may contain additionally the context prefix of the naming context which the referral refers to. The **contextPrefix** component is absent if the referral is based on a non-specific subordinate reference. The cross reference returned by a referral is based on knowledge held by the DSA which generated the referral.

In both cases (chaining result and referral) an administrative authority through its DSA may elect to ignore the request for returning cross references.

10.4.2 Knowledge Inconsistencies

The Directory has to support consistency-checking mechanisms to guarantee a certain degree of knowledge consistency.

AVA Documents
Document Sharing Hub

Full document details: ISO_IEC 9594-4_1990

10.4.2.1 Detection of Knowledge Inconsistencies

The kind of inconsistency and its detection varies for the different types of knowledge references.

• *Cross and Subordinate references*:

This type of reference is invalid if the referenced DSA does not have a local naming context with the context prefix contained in the reference. This inconsistency will be detected during the determination of the initial naming context of the name resolution process by the **operationProgress** and **referenceType** components of **ChainingArgument**.

• *Non-specific Subordinate references*

This type of reference is invalid if the referenced DSA does not have a local naming context whose immediately superior context prefix is contained in the reference, i.e, the reference contains that DSA's local context prefix minus the last RDN. The consistency check is applied as above.

• *Superior References:*

An invalid superior reference is one which does not form part of a reference path to the root. The maintenance of superior references shall be done by external means and is outside the scope of this part of ISO/IEC 9594.

Note — It is not always possible to detect an invalid superior reference.

10.4.2.2 Reporting of Knowledge Inconsistencies

If chaining is used in performing a Directory request, all knowledge inconsistencies will be detected by the DSA which holds the invalid knowledge reference, through receiving a **serviceError** with problem of **invalidReference**.

If a DSA returns a referral which is based on an invalid knowledge reference, the requestor will be returned a **serviceError** with problem of **invalidReference** if it uses the referral. How the error condition will be propagated to the DSA which stores the invalid reference is not within the scope of this part of ISO/IEC 9594.

10.4.2.3 Treatment of Inconsistent Knowledge References

After a DSA has detected an invalid reference it should try to re-establish knowledge consistency. For example, this can be done by simply deleting an invalid cross reference or by replacing it with a correct one which can be obtained using the **returnCrossRefs** mechanisms.

The way in which a DSA actually handles invalid references is a local matter, and outside the scope of this part of ISO/IEC 9594.

SECTION 4: DSA ABSTRACT SERVICE

11 Overview of DSA Abstract Service

11.1 The abstract service of the directory is fully described in ISO/IEC 9594-3. When such a service is provided in a distributed environment, as modelled in clause 7 of this part of ISO/IEC 9594, it can be regarded as being provided by means of a set of DSAs. This is illustrated in figure 1.

11.2 To describe this model, the refinement of the **directory** object into its component **dsa** objects can be expressed as:

```
DirectoryRefinement ::= REFINE directory AS
        dsa             RECURRING
        readPort            [S]     VISIBLE
        searchPort          [S]     VISIBLE
        modifyPort          [S]     VISIBLE
        chainedReadPort     PAIRED WITH dsa
        chainedSearchPort   PAIRED WITH dsa
        chainedModifyPort   PAIRED WITH dsa
```

11.3 The **dsa** object itself can be defined as follows:

```
dsa     OBJECT
                PORTS {     readPort            [S],
                            searchPort          [S],
                            modifyPort          [S],
                            chainedReadPort,
                            chainedSearchPort,
                            chainedModifyPort}
        ::=     id-ot-dsa
```

The DSA supplies Read, Search, and Modify ports, thus making visible those services to the users of the directory object, namely the DUAs. In addition, a DSA supports "distributed" versions of these ports, namely Chained Read, Chained Search, and Chained Modify, which allow DSAs to propagate requests for those services to other DSAs.

11.4 The ports cited from 11.2 and 11.3 (excluding those which are defined in ISO/IEC 9594-3), are defined as follows:

AVA Documents
Document Sharing Hub
Full document details: ISO_IEC 9594-4_1990