INTERNATIONAL STANDARD

ISO/IEC/IEEE 8802-1CB

First edition
2019-02

Information technology — Telecommunications and information exchange between systems — Local and metropolitan area networks — Specific requirements —

Part 1CB: Frame replicaton and elimination for reliability

Technologies de l'information — Télécommunications et échange d'information entre systèmes — Réseaux locaux et métropolitains — Exigences spécifiques —

Partie 1CB: Duplication de trame et son élimination pour la fiabilité

Reference number
ISO/IEC/IEEE 8802-1CB:2019(E)

© IEEE 2017

Documents
Document Sharing Hub

Full document details: ISO IEC IEEE 08802-1CB-2019

COPYRIGHT PROTECTED DOCUMENT

© IEEE 2017

All rights reserved. Unless otherwise specified, or required in the context of its implementation, no part of this publication may be reproduced or utilized otherwise in any form or by any means, electronic or mechanical, including photocopying, or posting on the internet or an intranet, without prior written permission. Permission can be requested from either ISO or IEEE at the respective address below or ISO's member body in the country of the requester.

ISO copyright office
CP 401 • Ch. de Blandonnet 8
CH-1214 Vernier, Geneva
Phone: +41 22 749 01 11
Fax: +41 22 749 09 47
Email: copyright@iso.org
Website: www.iso.org

Institute of Electrical and Electronics Engineers, Inc
3 Park Avenue, New York
NY 10016-5997, USA

Email: stds.ipr@ieee.org
Website: www.ieee.org

Published in Switzerland

© IEEE 2017 – All rights reserved

Documents
Document Sharing Hub

Full document details: ISO IEC IEEE 08802-1CB-2019

Foreword

ISO (the International Organization for Standardization) and IEC (the International Electrotechnical Commission) form the specialized system for worldwide standardization. National bodies that are members of ISO or IEC participate in the development of International Standards through technical committees established by the respective organization to deal with particular fields of technical activity. ISO and IEC technical committees collaborate in fields of mutual interest. Other international organizations, governmental and non-governmental, in liaison with ISO and IEC, also take part in the work. In the field of information technology, ISO and IEC have established a joint technical committee, ISO/IEC JTC 1.

The procedures used to develop this document and those intended for its further maintenance are described in the ISO/IEC Directives, Part 1. In particular, the different approval criteria needed for the different types of ISO documents should be noted (see www.iso.org/directives).

IEEE Standards documents are developed within the IEEE Societies and the Standards Coordinating Committees of the IEEE Standards Association (IEEE-SA) Standards Board. The IEEE develops its standards through a consensus development process, approved by the American National Standards Institute, which brings together volunteers representing varied viewpoints and interests to achieve the final product. Volunteers are not necessarily members of the Institute and serve without compensation. While the IEEE administers the process and establishes rules to promote fairness in the consensus development process, the IEEE does not independently evaluate, test, or verify the accuracy of any of the information contained in its standards.

Attention is drawn to the possibility that some of the elements of this document may be the subject of patent rights. ISO and IEC shall not be held responsible for identifying any or all such patent rights. Details of any patent rights identified during the development of the document will be in the Introduction and/or on the ISO list of patent declarations received (see www.iso.org/patents).

Any trade name used in this document is information given for the convenience of users and does not constitute an endorsement.

For an explanation of the voluntary nature of standards, the meaning of ISO specific terms and expressions related to conformity assessment, as well as information about ISO's adherence to the World Trade Organization (WTO) principles in the Technical Barriers to Trade (TBT), see www.iso.org/iso/foreword.html.

ISO/IEC/IEEE 8802-1CB was prepared by the LAN/MAN of the IEEE Computer Society (as IEEE Std 802.1CB-2017) and drafted in accordance with its editorial rules. It was adopted, under the "fast-track procedure" defined in the Partner Standards Development Organization cooperation agreement between ISO and IEEE, by Joint Technical Committee ISO/IEC JTC 1, *Information technology*, Subcommittee SC6, *Telecommunications and information exchange between systems*.

A list of all parts in the ISO/IEC/IEEE 8802 series can be found on the ISO website.

Any feedback or questions on this document should be directed to the user's national standards body. A complete listing of these bodies can be found at www.iso.org/members.html.

© IEEE 2017 – All rights reserved

Documents
Document Sharing Hub
Full document details: ISO IEC IEEE 08802-1CB-2019

Documents
Document Sharing Hub

Full document details: ISO IEC IEEE 08802-1CB-2019

IEEE Std 802.1CB™-2017

IEEE Standard for
Local and metropolitan area networks—

Frame Replication and Elimination for Reliability

Sponsor

LAN/MAN Standards Committee
of the
IEEE Computer Society

Approved 28 September 2017

IEEE-SA Standards Board

Documents
Document Sharing Hub

Full document details: ISO IEC IEEE 08802-1CB-2019

Abstract: This standard specifies procedures, managed objects, and protocols for bridges and end systems that provide identification and replication of packets for redundant transmission, identification of duplicate packets, and elimination of duplicate packets. It is not concerned with the creation of the multiple paths over which the duplicates are transmitted.

Keywords: Bridged Local Area Networks, Bridges, Bridging, Frame Elimination, Frame Replication, IEEE 802®, IEEE 802.1CB™, IEEE 802.1Q™, local area networks (LANs), MAC Bridges, Redundancy, Time-Sensitive Networking, TSN, Virtual Bridged Local Area Networks (virtual LANs)

The Institute of Electrical and Electronics Engineers, Inc.
3 Park Avenue, New York, NY 10016-5997, USA

Copyright © 2017 by The Institute of Electrical and Electronics Engineers, Inc.
All rights reserved. Published 27 October 2017. Printed in the United States of America.

IEEE and 802 are registered trademarks in the U.S. Patent & Trademark Office, owned by The Institute of Electrical and Electronics Engineers, Incorporated.

Print: ISBN 978-1-5044-4297-8 STD22761
PDF: ISBN 978-1-5044-4298-5 STDPD22761

IEEE prohibits discrimination, harassment, and bullying.
For more information, visit http://www.ieee.org/web/aboutus/whatis/policies/p9-26.html.
No part of this publication may be reproduced in any form, in an electronic retrieval system or otherwise, without the prior written permission of the publisher.

Copyright © 2017 IEEE. All rights reserved.

© IEEE 2017 – All rights reserved

Documents
Document Sharing Hub

Full document details: ISO IEC IEEE 08802-1CB-2019

Important Notices and Disclaimers Concerning IEEE Standards Documents

IEEE documents are made available for use subject to important notices and legal disclaimers. These notices and disclaimers, or a reference to this page, appear in all standards and may be found under the heading "Important Notices and Disclaimers Concerning IEEE Standards Documents." They can also be obtained on request from IEEE or viewed at http://standards.ieee.org/IPR/disclaimers.html.

Notice and Disclaimer of Liability Concerning the Use of IEEE Standards Documents

IEEE Standards documents (standards, recommended practices, and guides), both full-use and trial-use, are developed within IEEE Societies and the Standards Coordinating Committees of the IEEE Standards Association ("IEEE-SA") Standards Board. IEEE ("the Institute") develops its standards through a consensus development process, approved by the American National Standards Institute ("ANSI"), which brings together volunteers representing varied viewpoints and interests to achieve the final product. IEEE Standards are documents developed through scientific, academic, and industry-based technical working groups. Volunteers in IEEE working groups are not necessarily members of the Institute and participate without compensation from IEEE. While IEEE administers the process and establishes rules to promote fairness in the consensus development process, IEEE does not independently evaluate, test, or verify the accuracy of any of the information or the soundness of any judgments contained in its standards.

IEEE Standards do not guarantee or ensure safety, security, health, or environmental protection, or ensure against interference with or from other devices or networks. Implementers and users of IEEE Standards documents are responsible for determining and complying with all appropriate safety, security, environmental, health, and interference protection practices and all applicable laws and regulations.

IEEE does not warrant or represent the accuracy or content of the material contained in its standards, and expressly disclaims all warranties (express, implied and statutory) not included in this or any other document relating to the standard, including, but not limited to, the warranties of: merchantability; fitness for a particular purpose; non-infringement; and quality, accuracy, effectiveness, currency, or completeness of material. In addition, IEEE disclaims any and all conditions relating to: results; and workmanlike effort. IEEE standards documents are supplied "AS IS" and "WITH ALL FAULTS."

Use of an IEEE standard is wholly voluntary. The existence of an IEEE standard does not imply that there are no other ways to produce, test, measure, purchase, market, or provide other goods and services related to the scope of the IEEE standard. Furthermore, the viewpoint expressed at the time a standard is approved and issued is subject to change brought about through developments in the state of the art and comments received from users of the standard.

In publishing and making its standards available, IEEE is not suggesting or rendering professional or other services for, or on behalf of, any person or entity nor is IEEE undertaking to perform any duty owed by any other person or entity to another. Any person utilizing any IEEE Standards document, should rely upon his or her own independent judgment in the exercise of reasonable care in any given circumstances or, as appropriate, seek the advice of a competent professional in determining the appropriateness of a given IEEE standard.

IN NO EVENT SHALL IEEE BE LIABLE FOR ANY DIRECT, INDIRECT, INCIDENTAL, SPECIAL, EXEMPLARY, OR CONSEQUENTIAL DAMAGES (INCLUDING, BUT NOT LIMITED TO: PROCUREMENT OF SUBSTITUTE GOODS OR SERVICES; LOSS OF USE, DATA, OR PROFITS; OR BUSINESS INTERRUPTION) HOWEVER CAUSED AND ON ANY THEORY OF LIABILITY, WHETHER IN CONTRACT, STRICT LIABILITY, OR TORT (INCLUDING NEGLIGENCE OR OTHERWISE) ARISING IN ANY WAY OUT OF THE PUBLICATION, USE OF, OR RELIANCE UPON ANY STANDARD, EVEN IF ADVISED OF THE POSSIBILITY OF SUCH DAMAGE AND REGARDLESS OF WHETHER SUCH DAMAGE WAS FORESEEABLE.

Copyright © 2017 IEEE. All rights reserved.

© IEEE 2017 – All rights reserved

Documents
Document Sharing Hub

Full document details: ISO IEC IEEE 08802-1CB-2019

Translations

The IEEE consensus development process involves the review of documents in English only. In the event that an IEEE standard is translated, only the English version published by IEEE should be considered the approved IEEE standard.

Official statements

A statement, written or oral, that is not processed in accordance with the IEEE-SA Standards Board Operations Manual shall not be considered or inferred to be the official position of IEEE or any of its committees and shall not be considered to be, or be relied upon as, a formal position of IEEE. At lectures, symposia, seminars, or educational courses, an individual presenting information on IEEE standards shall make it clear that his or her views should be considered the personal views of that individual rather than the formal position of IEEE.

Comments on standards

Comments for revision of IEEE Standards documents are welcome from any interested party, regardless of membership affiliation with IEEE. However, IEEE does not provide consulting information or advice pertaining to IEEE Standards documents. Suggestions for changes in documents should be in the form of a proposed change of text, together with appropriate supporting comments. Since IEEE standards represent a consensus of concerned interests, it is important that any responses to comments and questions also receive the concurrence of a balance of interests. For this reason, IEEE and the members of its societies and Standards Coordinating Committees are not able to provide an instant response to comments or questions except in those cases where the matter has previously been addressed. For the same reason, IEEE does not respond to interpretation requests. Any person who would like to participate in revisions to an IEEE standard is welcome to join the relevant IEEE working group.

Comments on standards should be submitted to the following address:

Secretary, IEEE-SA Standards Board
445 Hoes Lane
Piscataway, NJ 08854 USA

Laws and regulations

Users of IEEE Standards documents should consult all applicable laws and regulations. Compliance with the provisions of any IEEE Standards document does not imply compliance to any applicable regulatory requirements. Implementers of the standard are responsible for observing or referring to the applicable regulatory requirements. IEEE does not, by the publication of its standards, intend to urge action that is not in compliance with applicable laws, and these documents may not be construed as doing so.

Copyrights

IEEE draft and approved standards are copyrighted by IEEE under U.S. and international copyright laws. They are made available by IEEE and are adopted for a wide variety of both public and private uses. These include both use, by reference, in laws and regulations, and use in private self-regulation, standardization, and the promotion of engineering practices and methods. By making these documents available for use and adoption by public authorities and private users, IEEE does not waive any rights in copyright to the documents.

Copyright © 2017 IEEE. All rights reserved.

© IEEE 2017 – All rights reserved

Documents
Document Sharing Hub

Full document details: ISO IEC IEEE 08802-1CB-2019

Photocopies

Subject to payment of the appropriate fee, IEEE will grant users a limited, non-exclusive license to photocopy portions of any individual standard for company or organizational internal use or individual, non-commercial use only. To arrange for payment of licensing fees, please contact Copyright Clearance Center, Customer Service, 222 Rosewood Drive, Danvers, MA 01923 USA; +1 978 750 8400. Permission to photocopy portions of any individual standard for educational classroom use can also be obtained through the Copyright Clearance Center.

Updating of IEEE Standards documents

Users of IEEE Standards documents should be aware that these documents may be superseded at any time by the issuance of new editions or may be amended from time to time through the issuance of amendments, corrigenda, or errata. An official IEEE document at any point in time consists of the current edition of the document together with any amendments, corrigenda, or errata then in effect.

Every IEEE standard is subjected to review at least every ten years. When a document is more than ten years old and has not undergone a revision process, it is reasonable to conclude that its contents, although still of some value, do not wholly reflect the present state of the art. Users are cautioned to check to determine that they have the latest edition of any IEEE standard.

In order to determine whether a given document is the current edition and whether it has been amended through the issuance of amendments, corrigenda, or errata, visit the IEEE-SA Website at http://ieeexplore.ieee.org or contact IEEE at the address listed previously. For more information about the IEEE SA or IEEE's standards development process, visit the IEEE-SA Website at http://standards.ieee.org.

Errata

Errata, if any, for all IEEE standards can be accessed on the IEEE-SA Website at the following URL: http://standards.ieee.org/findstds/errata/index.html. Users are encouraged to check this URL for errata periodically.

Patents

Attention is called to the possibility that implementation of this standard may require use of subject matter covered by patent rights. By publication of this standard, no position is taken by the IEEE with respect to the existence or validity of any patent rights in connection therewith. If a patent holder or patent applicant has filed a statement of assurance via an Accepted Letter of Assurance, then the statement is listed on the IEEE-SA Website at http://standards.ieee.org/about/sasb/patcom/patents.html. Letters of Assurance may indicate whether the Submitter is willing or unwilling to grant licenses under patent rights without compensation or under reasonable rates, with reasonable terms and conditions that are demonstrably free of any unfair discrimination to applicants desiring to obtain such licenses.

Essential Patent Claims may exist for which a Letter of Assurance has not been received. The IEEE is not responsible for identifying Essential Patent Claims for which a license may be required, for conducting inquiries into the legal validity or scope of Patents Claims, or determining whether any licensing terms or conditions provided in connection with submission of a Letter of Assurance, if any, or in any licensing agreements are reasonable or non-discriminatory. Users of this standard are expressly advised that determination of the validity of any patent rights, and the risk of infringement of such rights, is entirely their own responsibility. Further information may be obtained from the IEEE Standards Association.

Copyright © 2017 IEEE. All rights reserved.

© IEEE 2017 – All rights reserved

Documents
Document Sharing Hub

Full document details: ISO IEC IEEE 08802-1CB-2019

Participants

At the time of approval of this standard, the IEEE 802.1 Working Group had the following membership:

Glenn Parsons, *Chair*
John Messenger, *Vice Chair*
János Farkas, *Chair, Time-Sensitive Networking Task Group*
Norman Finn, *Editor*

Ralf Assmann
Shenghua Bao
Jens Bierschenk
Steinar Bjornstad
Christian Boiger
Paul Bottorff
David Chen
Feng Chen
Weiying Cheng
Rodney Cummings
Mickael Fontaine
Geoffrey Garner
Eric W. Gray
Craig Gunther
Marina Gutierrez
Stephen Haddock
Mark Hantel
Patrick Heffernan
Marc Holness
Hal Keen
Stephan Kehrer
Jouni Korhonen
Hajime Koto
Yizhou Li
Christophe Mangin
James McIntosh
Robert Moskowitz
Tero Mustala
Donald R. Pannell
Walter Pienciak
Michael Potts
Karen Randall
Maximilian Riegel
Jessy Rouyer
Eero Ryytty
Soheil Samii
Frank Schewe
Michael Seaman
Johannes Specht
Patricia Thaler
Paul Unbehagen
Hao Wang
Tongtong Wang
Xinyuan Wang
Karl Weber
Brian Weis
Jordon Woods
Nader Zein

The following members of the individual balloting committee voted on this standard. Balloters may have voted for approval, disapproval, or abstention.

Thomas Alexander
Richard Alfvin
Butch Anton
Stefan Aust
Steinar Bjornstad
Christian Boiger
David Brandt
Nancy Bravin
Ashley Butterworth
William Byrd
Yesenia Cevallos
Keith Chow
Charles Cook
Rodney Cummings
Patrick Diamond
Richard Doyle
Sourav Dutta
Richard Edgar
Marc Emmelmann
János Farkas
Norman Finn
Michael Fischer
Yukihiro Fujimoto
Devon Gayle
Joel Goergen
Eric W. Gray
Randall Groves
Craig Gunther
Stephen Haddock
Mark Hantel
Marco Hernandez
Guido Hiertz
Werner Hoelzl
Noriyuki Ikeuchi
Osamu Ishida
Atsushi Ito
Raj Jain
Anthony Jeffree
SangKwon Jeong
Michael Johas Teener
Peter Jones
Piotr Karocki
Stuart Kerry
Yongbum Kim
Jeff Koftinoff
Jouni Korhonen
Hyeong Ho Lee
John Lemon
Joseph Levy
Arthur H. Light
Elvis Maculuba
Roger Marks
Arthur Marris
Richard Mellitz
Charles Moorwood
Henry Muyshondt
Charles Ngethe
Nick S. A. Nikjoo
Paul Nikolich
Saad Nsaif
Satoshi Obara
David Olsen
Glenn Parsons
Bansi Patel
Arumugam Paventhan
Adee Ran
Alon Regev
Maximilian Riegel
Robert Robinson
Benjamin Rolfe
Dan Romascanu
Jessy Rouyer
Osman Sakr
Bartien Sayogo
Frank Schewe
Michael Seaman
Veselin Skendzic
Ju-Hyung Son
Kevin Stanton
Thomas Starai
Eugene Stoudenmire
Walter Struppler
Patricia Thaler
Dmitri Varsanofiev
Prabodh Varshney
George Vlantis
Khurram Waheed
Karl Weber
Oren Yuen
Zhen Zhou

Copyright © 2017 IEEE. All rights reserved.

© IEEE 2017 – All rights reserved

Documents
Document Sharing Hub

Full document details: ISO IEC IEEE 08802-1CB-2019

When the IEEE-SA Standards Board approved this standard on 28 September 2017, it had the following membership:

Jean-Philippe Faure, *Chair*
Gary Hoffman, *Vice Chair*
John D. Kulick, *Past Chair*
Konstantinos Karachalios, *Secretary*

Chuck Adams
Masayuki Ariyoshi
Ted Burse
Stephen Dukes
Doug Edwards
J. Travis Griffith
Michael Janezic
Thomas Koshy
Joseph L. Koepfinger*
Kevin Lu
Daleep Mohla
Damir Novosel
Ronald C. Petersen
Annette D. Reilly
Robby Robson
Dorothy Stanley
Adrian Stephens
Mehmet Ulema
Phil Wennblom
Howard Wolfman
Yu Yuan

*Member Emeritus

Copyright © 2017 IEEE. All rights reserved.

© IEEE 2017 – All rights reserved

Documents
Document Sharing Hub

Full document details: ISO IEC IEEE 08802-1CB-2019

Introduction

This introduction is not part of IEEE Std 802.1CB-2017, IEEE Standard for Local and metropolitan area networks—Frame Replication and Elimination for Reliability.

This standard defines Frame Replication and Elimination for Reliability.

This standard contains state-of-the-art material. The area covered by this standard is undergoing evolution. Revisions are anticipated within the next few years to clarify existing material, to correct possible errors, and to incorporate new related material. Information on the current revision state of this and other IEEE 802® standards can be obtained from

Secretary, IEEE-SA Standards Board
445 Hoes Lane
P.O. Box 1331
Piscataway, NJ 08855-1331
USA

Copyright © 2017 IEEE. All rights reserved.

Documents
Document Sharing Hub
© IEEE 2017 – All rights reserved

Full document details: ISO IEC IEEE 08802-1CB-2019

Contents

1. Overview ... 16

1.1 Scope ... 16
1.2 Rationale ... 16
1.3 State diagram conventions ... 16
1.4 Specification model ... 16
1.5 Specification precedence ... 17
1.6 Introduction ... 17

2. Normative references ... 18

3. Definitions ... 19

4. Acronyms and abbreviations ... 21

5. Conformance ... 22

5.1 Requirements terminology ... 22
5.2 Conformant components and equipment ... 22
5.3 Stream identification component required behaviors ... 22
5.4 Stream identification component recommended behavior ... 23
5.5 Stream identification component optional behaviors ... 23
5.6 Talker end system required behaviors ... 23
5.7 Talker end system recommended behaviors ... 23
5.8 Talker end system optional behaviors ... 23
5.9 Listener end system required behaviors ... 24
5.10 Listener end system recommended behavior ... 24
5.11 Listener end system optional behaviors ... 24
5.12 Relay system required behaviors ... 24
5.13 Relay system recommended behaviors ... 25
5.14 Relay system optional behaviors ... 25
5.15 FRER C-component required and optional behaviors ... 25

6. Stream identification ... 26

6.1 Stream service subparameters ... 27
6.2 Stream identification function ... 28
6.3 Stream identification in systems ... 29
6.4 Null Stream identification ... 30
6.5 Source MAC and VLAN Stream identification ... 31
6.6 Active Destination MAC and VLAN Stream identification ... 31
6.7 IP Stream identification ... 32

7. Frame Replication and Elimination for Reliability ... 33

7.1 Overview of Frame Replication and Elimination for Reliability ... 33
7.1.1 Goals and objectives ... 33
7.2 Use of the term Stream ... 35
7.3 Frame Replication and Elimination for Reliability functions ... 35
7.4 Sequencing function ... 36
7.4.1 Sequence generation function ... 36
7.4.1.1 Events for sequence generation ... 37
7.4.1.2 Variables for sequence generation ... 37

Copyright © 2017 IEEE. All rights reserved.

© IEEE 2017 – All rights reserved

Documents
Document Sharing Hub

Full document details: ISO IEC IEEE 08802-1CB-2019

7.4.1.2.1 GenSeqSpace ... 37
7.4.1.2.2 GenSeqNum ... 37
7.4.1.3 SequenceGenerationReset ... 37
7.4.1.4 SequenceGenerationAlgorithm ... 37
7.4.2 Sequence recovery function ... 38
7.4.3 Base recovery function ... 38
7.4.3.1 Events for sequence recovery ... 39
7.4.3.2 Variables for sequence recovery ... 39
7.4.3.2.1 RecovSeqSpace ... 39
7.4.3.2.2 SequenceHistory ... 40
7.4.3.2.3 RecovSeqNum ... 40
7.4.3.2.4 RemainingTicks ... 40
7.4.3.2.5 TicksPerSecond ... 40
7.4.3.2.6 TakeAny ... 40
7.4.3.3 SequenceRecoveryReset ... 40
7.4.3.4 VectorRecoveryAlgorithm ... 41
7.4.3.5 MatchRecoveryAlgorithm ... 43
7.4.3.6 ShiftSequenceHistory ... 44
7.4.4 Latent error detection function ... 45
7.4.4.1 Events for latent error detection ... 45
7.4.4.2 Variables for latent error detection ... 46
7.4.4.2.1 CurBaseDifference ... 46
7.4.4.3 LatentErrorReset ... 46
7.4.4.4 LatentErrorTest ... 46
7.5 Individual recovery function ... 47
7.6 Sequence encode/decode function ... 47
7.7 Stream splitting function ... 47
7.8 Redundancy tag ... 48
7.8.1 Redundancy tag EtherType ... 49
7.8.2 Redundancy tag information ... 49
7.9 HSR sequence tag ... 49
7.10 PRP sequence trailer ... 50
7.11 Autoconfiguration ... 51
7.11.1 Introduction to autoconfiguration ... 51
7.11.2 Creating autoconfigured Stream identity table entries ... 52

8. Frame Replication and Elimination for Reliability in Bridges ... 56

8.1 Limiting options ... 56
8.2 FRER C-component input transformations ... 58
8.3 Frame Replication and Elimination for Reliability and VLAN tags ... 58
8.4 Configuring Frame Replication and Elimination for Reliability in Bridges ... 59

9. Stream Identification Management ... 61

9.1 Stream identity table ... 61
9.1.1 tsnStreamIdEntry ... 61
9.1.1.1 tsnStreamIdHandle ... 61
9.1.1.2 tsnStreamIdInFacOutputPortList ... 61
9.1.1.3 tsnStreamIdOutFacOutputPortList ... 61
9.1.1.4 tsnStreamIdInFacInputPortList ... 62
9.1.1.5 tsnStreamIdOutFacInputPortList ... 62
9.1.1.6 tsnStreamIdIdentificationType ... 62
9.1.1.7 tsnStreamIdParameters ... 62
9.1.2 Managed objects for Null Stream identification ... 62

Copyright © 2017 IEEE. All rights reserved.

© IEEE 2017 – All rights reserved

Documents
Document Sharing Hub

Full document details: ISO IEC IEEE 08802-1CB-2019

9.1.2.1 tsnCpeNullDownDestMac ... 62
9.1.2.2 tsnCpeNullDownTagged ... 63
9.1.2.3 tsnCpeNullDownVlan ... 63
9.1.3 Managed objects for Source MAC and VLAN Stream identification ... 63
9.1.3.1 tsnCpeSmacVlanDownSrcMac ... 63
9.1.3.2 tsnCpeSmacVlanDownTagged ... 63
9.1.3.3 tsnCpeSmacVlanDownVlan ... 63
9.1.4 Managed objects for Active Destination MAC and VLAN Stream identifications . 63
9.1.4.1 tsnCpeDmacVlanDownDestMac ... 63
9.1.4.2 tsnCpeDmacVlanDownTagged ... 64
9.1.4.3 tsnCpeDmacVlanDownVlan ... 64
9.1.4.4 tsnCpeDmacVlanDownPriority ... 64
9.1.4.5 tsnCpeDmacVlanUpDestMac ... 64
9.1.4.6 tsnCpeDmacVlanUpTagged ... 64
9.1.4.7 tsnCpeDmacVlanUpVlan ... 65
9.1.4.8 tsnCpeDmacVlanUpPriority ... 65
9.1.5 Managed objects for IP Stream identification ... 65
9.1.5.1 tsnCpeIpIdDestMac ... 65
9.1.5.2 tsnCpeIpIdTagged ... 65
9.1.5.3 tsnCpeIpIdVlan ... 65
9.1.5.4 tsnCpeIpIdIpSource ... 65
9.1.5.5 tsnCpeIpIdIpDestination ... 65
9.1.5.6 tsnCpeIpIdDscp ... 65
9.1.5.7 tsnCpeIpIdNextProtocol ... 66
9.1.5.8 tsnCpeIpIdSourcePort ... 66
9.1.5.9 tsnCpeIpIdDestinationPort ... 66
9.2 Operational per-port per-Stream Stream identification counters ... 66
9.2.1 tsnCpsSidInputPackets ... 66
9.2.2 tsnCpsSidOutputPackets ... 66
9.3 Operational per-port Stream identification counters ... 66
9.3.1 tsnCpSidInputPackets ... 66
9.3.2 tsnCpSidOutputPackets ... 66

10. Frame Replication and Elimination for Reliability management ... 67

10.1 Counter behavior ... 67
10.2 Additional tsnStreamIdEntry manged objects ... 67
10.2.1 tsnStreamIdAutoconfigured ... 68
10.2.2 tsnStreamIdLanPathId ... 68
10.3 Sequence generation table ... 68
10.3.1 frerSeqGenEntry ... 68
10.3.1.1 frerSeqGenStreamList ... 68
10.3.1.2 frerSeqGenDirection ... 68
10.4 Sequence recovery table ... 68
10.4.1 frerSeqRcvyEntry ... 68
10.4.1.1 frerSeqRcvyStreamList ... 68
10.4.1.2 frerSeqRcvyPortList ... 69
10.4.1.3 frerSeqRcvyDirection ... 69
10.4.1.4 frerSeqRcvyReset ... 69
10.4.1.5 frerSeqRcvyAlgorithm ... 69
10.4.1.6 frerSeqRcvyHistoryLength ... 69
10.4.1.7 frerSeqRcvyResetMSec ... 69
10.4.1.8 frerSeqRcvyInvalidSequenceValue ... 69
10.4.1.9 frerSeqRcvyTakeNoSequence ... 70

Copyright © 2017 IEEE. All rights reserved.

© IEEE 2017 – All rights reserved

Documents
Document Sharing Hub

Full document details: ISO IEC IEEE 08802-1CB-2019

10.4.1.10 frerSeqRcvyIndividualRecovery ... 70
10.4.1.11 frerSeqRcvyLatentErrorDetection ... 70
10.4.1.12 Latent error detection managed objects ... 70
10.4.1.12.1 frerSeqRcvyLatentErrorDifference ... 70
10.4.1.12.2 frerSeqRcvyLatentErrorPeriod ... 70
10.4.1.12.3 frerSeqRcvyLatentErrorPaths ... 70
10.4.1.12.4 frerSeqRcvyLatentResetPeriod ... 71
10.5 Sequence identification table ... 71
10.5.1 frerSeqEncEntry ... 71
10.5.1.1 frerSeqEncStreamList ... 71
10.5.1.2 frerSeqEncPort ... 71
10.5.1.3 frerSeqEncDirection ... 71
10.5.1.4 frerSeqEncActive ... 71
10.5.1.5 frerSeqEncEncapsType ... 71
10.5.1.6 frerSeqEncPathIdLanId ... 71
10.6 Stream split table ... 72
10.6.1 frerSplitEntry ... 72
10.6.1.1 frerSplitPort ... 72
10.6.1.2 frerSplitDirection ... 72
10.6.1.3 frerSplitInputIdList ... 72
10.6.1.4 frerSplitOutputIdList ... 72
10.7 Managed objects for autoconfiguration ... 72
10.7.1 Sequence autoconfiguration table ... 72
10.7.1.1 frerAutSeqEntry ... 73
10.7.1.1.1 frerAutSeqSeqEncaps ... 73
10.7.1.1.2 frerAutSeqReceivePortList ... 73
10.7.1.1.3 frerAutSeqTagged ... 73
10.7.1.1.4 frerAutSeqVlan ... 73
10.7.1.1.5 frerAutSeqRecoveryPortList ... 73
10.7.1.1.6 frerAutSeqDestructMSec ... 73
10.7.1.1.7 frerAutSeqResetMSec ... 73
10.7.1.1.8 frerAutSeqAlgorithm ... 73
10.7.1.1.9 frerAutSeqHistoryLength ... 74
10.7.1.1.10 frerAutSeqCreateIndividual ... 74
10.7.1.1.11 frerAutSeqCreateRecovery ... 74
10.7.1.1.12 frerAutSeqLatErrDetection ... 74
10.7.1.1.13 frerAutSeqLatErrDifference ... 74
10.7.1.1.14 frerAutSeqLatErrPeriod ... 74
10.7.1.1.15 frerAutSeqLatErrResetPeriod ... 74
10.7.2 Output autoconfiguration table ... 74
10.7.2.1 frerAutOutEntry ... 74
10.7.2.1.1 frerAutOutPortList ... 74
10.7.2.1.2 frerAutOutEncaps ... 75
10.7.2.1.3 frerAutOutLanPathId ... 75
10.8 Operational per-port and per-Stream FRER counters ... 75
10.8.1 Per-Stream vs. per-Stream-per-port counters ... 75
10.8.2 frerCpsSeqGenResets ... 75
10.8.3 frerCpsSeqRcvyOutOfOrderPackets ... 75
10.8.4 frerCpsSeqRcvyRoguePackets ... 76
10.8.5 frerCpsSeqRcvyPassedPackets ... 76
10.8.6 frerCpsSeqRcvyDiscardedPackets ... 76
10.8.7 frerCpsSeqRcvyLostPackets ... 76
10.8.8 frerCpsSeqRcvyTaglessPackets ... 76
10.8.9 frerCpsSeqRcvyResets ... 76

Copyright © 2017 IEEE. All rights reserved.

Documents
Document Sharing Hub
© IEEE 2017 – All rights reserved

Full document details: ISO IEC IEEE 08802-1CB-2019

10.8.10 frerCpsSeqRcvyLatentErrorResets ... 76
10.8.11 frerCpsSeqEncErroredPackets ... 76
10.9 Operational per-port FRER counters ... 76
10.9.1 frerCpSeqRcvyPassedPackets ... 77
10.9.2 frerCpSeqRcvyDiscardPackets ... 77
10.9.3 frerCpSeqEncErroredPackets ... 77

Annex A (normative) Protocol Implementation Conformance Statement (PICS) proforma ... 78

A.1 Introduction ... 78
A.1.1 Abbreviations and special symbols ... 78
A.1.2 Instructions for completing the PICS proforma ... 79
A.1.3 Additional information ... 79
A.1.4 Exceptional information ... 79
A.1.5 Conditional items ... 80
A.1.6 Identification ... 80
A.2 PICS proforma for Frame Replication and Elimination for Reliability ... 81
A.2.1 Major capabilities/options ... 81
A.2.2 Stream identification component ... 81
A.2.3 Talker end system ... 82
A.2.4 Listener end system ... 83
A.2.5 Relay system ... 84
A.2.6 FRER 802.1Q C-component ... 86
A.2.7 Common requirements ... 86

Annex B (informative) Interoperability with other standards ... 87

B.1 Sequence number size ... 87
B.2 Per-Stream versus per-source sequencing ... 87

Annex C (informative) Frame Replication and Elimination for Reliability in systems ... 88

C.1 Example 1: End-to-end FRER ... 88
C.2 Example 2: Various stack positions ... 89
C.3 Example 3: Ladder redundancy ... 92
C.4 Example 4: Multicast trees ... 93
C.5 Example 5: Protocol interworking ... 93
C.6 Example 6: Chained two-port end systems ... 94
C.7 Cautions ... 95
C.8 Balancing tag insertion and removal ... 95
C.9 FRER and reserved bandwidth ... 95
C.10 Use of the Individual recovery function ... 97
C.11 Use of autoconfiguration ... 97
C.11.1 Routing and labeling Member Streams ... 97
C.11.2 Recognizing packets that trigger autoconfiguration ... 98
C.11.3 Per-port packet decoding and encoding ... 99
C.11.4 Individual and Sequence recovery functions ... 99

Annex D (informative) Bibliography ... 100

Copyright © 2017 IEEE. All rights reserved.

© IEEE 2017 – All rights reserved

Documents
Document Sharing Hub

Full document details: ISO IEC IEEE 08802-1CB-2019

List of figures

Figure 6-1—Stream identification service ... 26
Figure 6-2—A Stream with three Listeners ... 26
Figure 6-3—Stream identification function: single upper SAP ... 28
Figure 6-4—Stream identification function: array of upper SAPs ... 28
Figure 6-5—Stream functions in a relay system (three views of same system) ... 29
Figure 6-6—In- and out-facing functions ... 30
Figure 7-1—Compound Stream built from four Member Streams ... 33
Figure 7-2—Frame Replication and Elimination for Reliability functions ... 35
Figure 7-3—Sequence recovery functions and Individual recovery functions ... 47
Figure 7-4—R-TAG format ... 48
Figure 8-1—FRER functions in an FRER C-component ... 56
Figure 8-2—Augmented Forwarding Process does sequence recovery ... 57
Figure 8-3—Example Ethernet frame format ... 59
Figure C-1—Dual-homed end systems using Link Aggregation ... 88
Figure C-2—Protocol stack for End System B in Figure C-1 ... 89
Figure C-3—Protocol stack for End System G in Figure C-1 and Figure C-4 ... 89
Figure C-4—Frame Replication and Elimination for Reliability flexible positioning ... 90
Figure C-5—Protocol stack for relay system B, proxying for End System A, in Figure C-4 ... 91
Figure C-6—Protocol stack for relay system C in Figure C-4 ... 91
Figure C-7—Protocol stack for relay system F in Figure C-4 ... 92
Figure C-8—Ladder redundancy ... 92
Figure C-9—Multicast trees ... 93
Figure C-10—Protocol interworking ... 93
Figure C-11—Dual-homed end systems using 3-port bridge ... 94
Figure C-12—Protocol stacks for Systems B and G in Figure C-11 ... 94
Figure C-13—Explicit path causing a loop ... 95
Figure C-14—Example of Long and short paths ... 96
Figure C-15—Autoconfiguration example ... 98

Copyright © 2017 IEEE. All rights reserved.

© IEEE 2017 – All rights reserved

Documents
Document Sharing Hub

Full document details: ISO IEC IEEE 08802-1CB-2019

List of tables

Table 6-1—Stream identification functions 27
Table 7-1—R-TAG EtherType 49
Table 8-1—Managed objects for FRER in an FRER C-component 59
Table 9-1—Stream identification types 62
Table 10-1—Enumerated values for frerSeqRcvyAlgorithm 69
Table 10-2—Sequence Encode/Decode types 72

Copyright © 2017 IEEE. All rights reserved.

© IEEE 2017 – All rights reserved

Documents
Document Sharing Hub

Full document details: ISO IEC IEEE 08802-1CB-2019

IEEE Standard for
Local and metropolitan area networks—

Frame Replication and Elimination for Reliability

1. Overview

1.1 Scope

This standard specifies procedures, managed objects, and protocols for bridges and end systems that provide identification and replication of packets for redundant transmission, identification of duplicate packets, and elimination of duplicate packets. It is not concerned with the creation of the multiple paths over which the duplicates are transmitted.

1.2 Rationale

The reason for Frame Replication and Elimination for Reliability (FRER) is to increase the probability that a given packet will be delivered. It is expected that, in many applications, other means to increase the probability of delivery are likely to be used as well. When FRER is used over paths that are fixed to a specific topology, and that are protected against congestion loss (e.g., by using techniques described by IEEE Std 802.1BA™ [B1]), FRER can substantially reduce the probability of packet loss due to equipment failures.[1]

1.3 State diagram conventions

This document uses the programming language C (ISO/IEC 9899:2011) to document the operation of conformant systems.[2] C functions are distinguished with `this special fixed-width font` (e.g., 7.4.3.3). Each C function is executed when a given event occurs, as described for that code segment or in the accompanying text. Events are assumed to take place sequentially, not simultaneously, and code routines execute instantaneously.

1.4 Specification model

The model of operation documented by this standard is simply a basis for describing the functionality of compliant equipment. Implementations can adopt any internal model of operation compatible with the externally visible behavior that this standard specifies. Conformance of equipment to this standard is purely in respect of observable protocol.

[1]The numbers in brackets correspond to those of the bibliography in Annex D.
[2]Information on references can be found in Clause 2.

Copyright © 2017 IEEE. All rights reserved.

Documents
Document Sharing Hub
© IEEE 2017 – All rights reserved

Full document details: ISO IEC IEEE 08802-1CB-2019

1.5 Specification precedence

If any conflict among parts of this standard become apparent, C functions (see 1.3) take precedence over other parts of the standard, followed by information in normative tables, followed by that in normative text, followed by that in normative figures. Non-normative tables, figures, and text are in annexes and are clearly marked as such.

1.6 Introduction

This standard is one of a number of IEEE 802.1™ and other standards suitable for Time-Sensitive Networking (TSN) that together have the overall goal of providing extremely low packet loss rates and finite, low, and stable end-to-end latencies. TSN supports unicast and multicast Streams of packets that implement a wide range of demanding real-time applications including audio/video studios, industrial processes, and the control of machines and vehicles. The TSN goals are not achieved at the expense of hampering the ability of the network to carry traffic for non-time-critical applications.

At the highest level, this standard posits the existence of one Talker end system and one or more Listener end systems per Stream. A Stream is characterized by a maximum packet size and number of packets transmitted per time interval. Because the Stream's maximum throughput is known, the resources, including link bandwidth, buffer space, and control parameters, required at every hop along the Stream's path to guarantee that Stream zero congestion loss and finite latency, can be provided (by other standards, e.g., Clause 35 of IEEE Std 802.1Q™-2014). This provisioned path carrying the Stream is called a *Reservation*.

On the assumption that the time required for a dynamic network control protocol to recover from an equipment failure is unacceptable in certain applications, this standard defines Frame Replication and Elimination for Reliability (FRER), which divides a Stream into one or more linked Member Streams, thus making the original Stream a Compound Stream. It replicates the packets of the Stream, splitting the copies into the multiple Member Streams, and then rejoins those Member Streams at one or more other points, eliminates the replicates, and delivers the reconstituted Stream from those points.

In order to accommodate existing applications and to promote interoperability with similar standards, this standard defines a number of schemes for identifying packets belonging to Streams and distinguishing them from other packets.

Copyright © 2017 IEEE. All rights reserved.

© IEEE 2017 – All rights reserved

Documents
Document Sharing Hub

Full document details: ISO IEC IEEE 08802-1CB-2019

2. Normative references

The following referenced documents are indispensable for the application of this document (i.e., they must be understood and used, so each referenced document is cited in text and its relationship to this document is explained). For dated references, only the edition cited applies. For undated references, the latest edition of the referenced document (including any amendments or corrigenda) applies. Non-normative references (i.e., that provide additional information not required for the application of this document) are given in Annex D.

IEC 62439-3:2016, Industrial communication networks—High availability automation networks—Part 3: Parallel Redundancy Protocol (PRP) and High-availability Seamless Redundancy (HSR).[3]

IEEE Std 802®, IEEE Standard for Local and metropolitan area networks: Overview and Architecture.[4, 5]

IEEE Std 802.1AC™, IEEE Standard for Local and metropolitan area networks—Media Access Control (MAC) Service Definition.

IEEE Std 802.1Q™, IEEE Standard for Local and metropolitan area networks—Bridges and Bridged Networks.

IETF RFC 768, User Datagram Protocol, Postel, J., August 1980.[6]

IETF RFC 791, Internet Protocol, Postel, J., Ed., September 1981.

IETF RFC 793, Transmission Control Protocol, Postel, J., Ed., September 1981.

IETF RFC 2460, Internet Protocol, Version 6 (IPv6) Specification, Deering, S. and R. Hinden, December 1998.

IETF RFC 2474, Definition of the Differentiated Services Field (DS Field) in the IPv4 and IPv6 Headers, Nichols, K., et al., December 1998.

IETF RFC 4960, Stream Control Transmission Protocol, Stewart, R., Ed., September 2007.

ISO/IEC 9899:2011, Information technology—Programming languages—C.[7]

[3]IEC publications are available from the International Electrotechnical Commission (http://www.iec.ch) and the American National Standards Institute (http://www.ansi.org/).

[4]The IEEE standards or products referred to in Clause 2 are trademarks owned by The Institute of Electrical and Electronics Engineers, Incorporated.

[5]IEEE publications are available from The Institute of Electrical and Electronics Engineers (http://standards.ieee.org).

[6]IETF documents (i.e., RFCs) are available for download at http://www.rfc-archive.org/.

[7]ISO/IEC publications are available from the International Organization for Standardization (http://www.iso.org/) and the American National Standards Institute (http://www.ansi.org/).

Copyright © 2017 IEEE. All rights reserved.

© IEEE 2017 – All rights reserved

Documents
Document Sharing Hub

Full document details: ISO IEC IEEE 08802-1CB-2019

3. Definitions

For the purposes of this document, the following terms and definitions apply. The *IEEE Standards Dictionary Online* should be consulted for terms not defined in this clause. [8]

This standard makes use of the following terms defined in IEEE Std 802®:

— End station
— Organizationally Unique Identifier (OUI)
— Company ID (CID)

bridge: A layer 2 interconnection device that conforms to IEEE Std 802.1Q.

Company ID (CID): CIDs allow a general means of assuring unique identifiers for a number of purposes. See Clause 8 of IEEE Std 802-2014.

Compound Stream: A Compound Stream is a Stream composed of one or more Member Streams linked together via Frame Replication and Elimination for Reliability (FRER).

down: The direction through the protocol stack from a sublayer using a service provided by another sublayer to the sublayer whose services it uses; the direction of output packets.

end station: A device attached to a local area network (LAN) or metropolitan area network (MAN), which acts as a source of and/or destination for data traffic carried on the LAN or MAN. (From IEEE Std 802)

end system: A system attached to a network that is an initial source or a final destination of packets transmitted across that network.

NOTE—The term *end system* is often used in this document in places where the reader of IEEE 802 standards would expect the term *end station* in order to avoid confusion caused by standards relating to routers. For example, a router, as defined by IETF, is an *IEEE 802 end station*, but not an end system. Where this standard specifically refers to the use of IEEE 802 services, the term *end station* is used. Where it refers to more generalized instances of connectionless services, the term *end system* is used.[9]

in-facing: In a system that includes a Stream Transfer Function, the "in-facing" protocol functions are those functions that are below the Stream Transfer Function on the port that is not above the physical layer. On a system that does not include a Stream Transfer Function, there are no in-facing protocol functions.

NOTE—See Figure 6-6.

input: Input packets are those moving up the protocol stack, regardless of the position of receiving function relative to the physical media, for example, by the M_UNITDATA.indication primitive of the Internal Sublayer Service (ISS).

Internal local area network (LAN): An instance of a connectionless packet service with two Service Access Points (SAPs), both internal to a single system, that relays packets from one SAP to the other. It is not observable externally to that system.

Internal Sublayer Service (ISS): An augmented version of the MAC Service, defined in 6.6 of IEEE Std 802.1Q-2014.

[8] *IEEE Standards Dictionary Online* is available at: http://dictionary.ieee.org.
[9] Notes in text, tables, and figures of a standard are given for information only and do not contain requirements needed to implement this standard.

Copyright © 2017 IEEE. All rights reserved.

© IEEE 2017 – All rights reserved

Documents
Document Sharing Hub

Full document details: ISO IEC IEEE 08802-1CB-2019

Media Access Control (MAC): The data link sublayer that is responsible for transferring data to and from the Physical Layer.

Member Stream: A Stream that is linked with other Member Streams via Frame Replication and Elimination for Reliability (FRER) to form a Compound Stream.

Non-Stream Transfer Function (NSTF): A two-port function that relays service indications on one port to service requests on the other port.

Organizationally Unique Identifier (OUI): OUIs allow a general means of assuring unique identifiers for a number of purposes. See Clause 9 and Clause 10 of IEEE Std 802-2014.

out-facing: In a system that includes a Stream Transfer Function, the "out-facing" protocol functions are those functions that are below the Stream Transfer Function on the port that is above the physical layer. On a system that does not include a Stream Transfer Function, all TSN functions are out-facing.

NOTE—See Figure 6-6.

output: Output packets are those moving down the protocol stack, regardless of the position of receiving function relative to the physical media, for example, by the M_UNITDATA.request primitive of the Internal Sublayer Service (ISS).

packet: A unit of data carried over a network, comprising, at least, one or more pairs of destination and source addresses and a payload. A packet carried on an Ethernet local area network (LAN) is a frame.

NOTE—The term *packet* is often used in this document in places where the reader of IEEE 802 standards would expect the term *frame*. Where the standard specifically refers to the use of IEEE 802 services, the term *frame* is used. Where the standard refers to more generalized instances of connectionless services, the term *packet* is used.

Quality of Service (QoS): Overall performance of a packet Stream as it relates to packet loss probability, latency, and latency variation.

relay system: A router or a bridge.

NOTE—The term *relay system* is often used in this document in places where the reader of IEEE 802 standards would expect the term *bridge*. A relay system can, in theory, be a router, a bridge, or some other kind of forwarding device. Where this standard specifically refers to one or the other, the terms *router* or *bridge* are used. Where it refers to more generalized instances of connectionless services, the term *relay system* is used.

Reservation: The collection of state information and resources allocated, in a chain of end systems and relay systems, for one or more Streams.

router: A packet forwarding device operating on Internet Protocol (IP) packets.

Stream: A unidirectional flow of time-sensitive data from one source to one or more destinations, and at the highest level, one Talker end system to one or more Listener end systems.

Stream Transfer Function: A two-port function that relays service indications on one port to service requests on the other port, where the service includes all TSN service subparameters.

subparameter: A service parameter encoded into the value of the connection_identifier parameter of the Internal Sublayer Service (ISS).

system: An end system or a relay system.

up: The direction through the protocol stack from a sublayer offering a service to the sublayer making use of that service; the direction of input packets.

Copyright © 2017 IEEE. All rights reserved.

© IEEE 2017 – All rights reserved

Documents
Document Sharing Hub

Full document details: ISO IEC IEEE 08802-1CB-2019

4. Acronyms and abbreviations

This standard contains the following abbreviations:

CID	Company ID
DRNI	Distributed Resilient Network Interconnect
EISS	Enhanced Internal Sublayer Service
FRER	Frame Replication and Elimination for Reliability
IEC	International Electrotechnical Commission
IP	Internet Protocol
ISO	International Organization for Standardization
ISS	Internal Sublayer Service
LAN	Local Area Network
MAC	Medium Access Control
NSTF	Non-Stream Transfer Function
OUI	Organizationally Unique Identifier
PDU	Protocol Data Unit
PICS	Protocol Implementation Conformance Statement
QoS	Quality of Service
R-TAG	Redundancy tag
SAP	Service Access Point
TSN	Time-Sensitive Networking
VLAN	Virtual Local Area Network

Copyright © 2017 IEEE. All rights reserved.

© IEEE 2017 – All rights reserved

Documents
Document Sharing Hub

Full document details: ISO IEC IEEE 08802-1CB-2019

5. Conformance

This clause specifies the mandatory and optional capabilities provided by conformant implementations of this standard.

5.1 Requirements terminology

For consistency with existing IEEE and IEEE 802.1 standards, requirements placed upon conformant implementations of this standard are expressed using the following terminology:

a) *Shall* is used for mandatory requirements;
b) *May* is used to describe implementation or administrative choices ("may" means "is permitted to," and hence, "may" and "may not" mean precisely the same thing);
c) *Should* is used for recommended choices (the behaviors described by "should" and "should not" are both permissible but not equally desirable choices).

The Protocol Implementation Conformance Statement (PICS) proformas (see Annex A) reflect the occurrences of the words "shall," "may," and "should" within the standard.

The standard avoids needless repetition and apparent duplication of its formal requirements by using *is*, *is not*, *are*, and *are not* for definitions and the logical consequences of conformant behavior. Behavior that is permitted but is neither always required nor directly controlled by an implementor or administrator, or whose conformance requirement is detailed elsewhere, is described by *can*. Behavior that never occurs in a conformant implementation or system of conformant implementations is described by *cannot*. The word *allow* is used as a replacement for the phrase "support the ability for," and the word *capability* means "can be configured to."

5.2 Conformant components and equipment

Conformance for Frame Replication and Elimination for Reliability (FRER) is defined for five types of components and equipment:

a) Stream identification components (5.3, 5.4, 5.5), which provide a useful subset of the FRER capabilities for systems that are not talker end systems, listener end systems, or relay systems.
b) Talker end systems (5.6, 5.7, 5.8), which originate Compound Streams.
c) Listener end systems (5.9, 5.10, 5.11), which consume Compound Streams.
d) Relay systems (5.12, 5.13, 5.14), which transfer or discard packets belonging to Compound Streams.
e) One particular type of Relay system, an FRER C-component (5.15).

The Stream identification component can be useful in components or equipment that are not talker end systems, listener end systems, or relay systems as defined in this standard, e.g., bridges or routers that carry packets belonging to Compound Streams, and must identify them, but do not process FRER sequence numbers. Other useful systems can be created using the preceding components listed. For example, a two-port Talker could be modeled and implemented as two Talker end systems in a single chassis, as a single one-port Talker end system that uses IEEE 802.1AX Link Aggregation to combine two physical ports into a single logical port (C.1), or as a single-port Talker end system connected to a three-port Bridge (C.6).

5.3 Stream identification component required behaviors

A Stream identification component shall be able to instantiate the following out-facing functions on at least one port, for at least one Compound Stream:

Copyright © 2017 IEEE. All rights reserved.

© IEEE 2017 – All rights reserved

Documents
Document Sharing Hub

Full document details: ISO IEC IEEE 08802-1CB-2019

a) Stream identification (Clause 6);
b) A Null Stream identification function (6.4); and
c) The managed objects in Clause 9.

5.4 Stream identification component recommended behavior

A Stream identification component should be able to instantiate the following out-facing functions on at least one port, for at least one Compound Stream:

a) An Active Destination MAC and VLAN Stream identification function (6.6).

5.5 Stream identification component optional behaviors

In addition to the requirements of 5.3 and 5.4, a Stream identification component may perform the following functions:

a) The items in 5.3 and 5.4 on more than one port;
b) The items in 5.3 and 5.4 for some number of Compound Streams greater than 1;
c) An IP Stream identification function (6.7); and/or
d) Additional types of Stream identification functions.

5.6 Talker end system required behaviors

A Talker end system shall be able to instantiate the following out-facing functions on at least one port, for at least one Compound Stream:

a) Stream identification (Clause 6);
b) A Null Stream identification function (6.4);
c) A Sequence generation function (7.4.1); and
d) The Redundancy tag Sequence encode/decode function specified in 7.6 and 7.8.
e) The managed objects in Clause 9 and Clause 10, excepting 10.7.

5.7 Talker end system recommended behaviors

A Talker end system should be able to instantiate the following out-facing functions on at least one port, for at least one Compound Stream:

a) An Active Destination MAC and VLAN Stream identification function (6.6); and
b) A Stream splitting function (7.7).

5.8 Talker end system optional behaviors

In addition to the requirements of 5.6, a Talker end system may perform the following functions:

a) The items in 5.6 and 5.7 on more than one port;
b) The items in 5.6 and 5.7 for some number of Compound Streams greater than 1;
c) An IP Stream identification function (6.7);
d) Additional types of Stream identification functions;
e) The HSR sequence tag (7.9);

Copyright © 2017 IEEE. All rights reserved.

© IEEE 2017 – All rights reserved

Documents
Document Sharing Hub

Full document details: ISO IEC IEEE 08802-1CB-2019

f) The PRP sequence trailer (7.10); and/or
g) Additional types of Sequence encode/decode functions.

5.9 Listener end system required behaviors

A Listener end system shall be able to instantiate the following out-facing functions on at least one port, for at least one Compound Stream:

a) Stream identification (Clause 6);
b) A Null Stream identification function (6.4);
c) A Sequence recovery function (7.4.2) that supports the MatchRecoveryAlgorithm (7.4.3.5) and supports the VectorRecoveryAlgorithm (7.4.3.4) with a value of at least 2 for the managed object frerSeqRcvyHistoryLength (10.4.1.6);
d) At least two instances of Individual recovery functions (7.5), each using the MatchRecoveryAlgorithm (7.4.3.5); and
e) The Redundancy tag Sequence encode/decode function specified in 7.6 and 7.8.
f) The managed objects in Clause 9 and Clause 10, excepting 10.7.

5.10 Listener end system recommended behavior

A Listener end system should be able to instantiate the following out-facing function on at least one port, for at least one Compound Stream:

a) An Active Destination MAC and VLAN Stream identification function (6.6).

5.11 Listener end system optional behaviors

In addition to the requirements of 5.9 and 5.10, a Listener end system may perform the following functions:

a) The items in 5.9 and 5.10 on more than one port;
b) The items in 5.9 and 5.10 for some number of Compound Streams greater than 1;
c) An IP Stream identification function (6.7);
d) Additional types of Stream identification functions;
e) The HSR sequence tag (7.9);
f) The PRP sequence trailer (7.10);
g) Additional types of Sequence encode/decode functions; and/or
h) At least two instances of Individual recovery functions (7.5), each using the VectorRecoveryAlgorithm (7.4.3.4).

5.12 Relay system required behaviors

A relay system shall be able to instantiate the following in-facing functions on at least two ports, for both transmit and receive, for at least one Stream:

a) Stream identification (Clause 6).
b) A Null Stream identification function (6.4);
c) A Sequence generation function (7.4.1);
d) The Redundancy tag Sequence encode/decode function specified in 7.6 and 7.8;

Copyright © 2017 IEEE. All rights reserved.

Documents
Document Sharing Hub

© IEEE 2017 – All rights reserved

Full document details: ISO IEC IEEE 08802-1CB-2019

e) A Sequence recovery function (7.4.2) that supports the MatchRecoveryAlgorithm (7.4.3.5) and supports the VectorRecoveryAlgorithm (7.4.3.4) with a value of at least 2 for the managed object frerSeqRcvyHistoryLength (10.4.1.6);
f) At least two instances of Individual recovery functions (7.5), each using the MatchRecoveryAlgorithm (7.4.3.5); and
g) The managed objects in Clause 9 and Clause 10, excepting 10.7.

5.13 Relay system recommended behaviors

A relay system should be able to instantiate the following in-facing functions on at least two ports, for both transmit and receive, for at least one Stream:

a) Active Destination MAC and VLAN Stream identification functions (6.6) for encoding and decoding packets; and
b) IP Stream identification functions (6.7) for identifying packets.

NOTE—IP Stream identification enables a relay system to proxy for a FRER-unaware end system.

5.14 Relay system optional behaviors

In addition to the requirements of 5.12 and 5.13, a relay system may perform the following functions:

a) The items in 5.12 or 5.13 on more than two ports;
b) The items in 5.12 or 5.13 for some number of Streams greater than 1;
c) Additional types of Stream identification functions;
d) The Stream splitting function (7.7);
e) The HSR sequence tag (7.9);
f) The PRP sequence trailer (7.10);
g) Additional types of Sequence encode/decode functions; and/or
h) Some or all of the functions in 5.12 or 5.13 as both in- and out-facing functions.
i) At least two instances of Individual recovery functions (7.5), each using the VectorRecoveryAlgorithm (7.4.3.4).
j) Autoconfiguration (7.11) and the associated managed objects (10.7).

5.15 FRER C-component required and optional behaviors

An FRER C-component is an IEEE 802.1Q C-VLAN component that is FRER-capable. An FRER C-component:

a) Shall meet all of the required and any or none of the optional behaviors for an IEEE 802.1Q C-VLAN component (5.5 of IEEE Std 802.1Q-2014).
b) Shall meet all of the required behaviors for a relay system (5.12);
c) May meet any or none of the optional behaviors for a relay system (5.14); and
d) Shall conform to the requirements for configuring FRER C-components (8.4).

Copyright © 2017 IEEE. All rights reserved.

© IEEE 2017 – All rights reserved

Documents
Document Sharing Hub

Full document details: ISO IEC IEEE 08802-1CB-2019

6. Stream identification

Clause 7 of IEEE Std 802.1AC describes the IEEE 802.1 layering model, that Frame Replication and Elimination for Reliability (FRER) follows. Stream identification utilizes a single Service Access Point (SAP) to a connectionless packet service offered by the layer below it [e.g., the Intermediate Sublayer Service (ISS) of Clause 11 of IEEE Std 802.1AC], and offers an array of SAPs to the layers above it, corresponding to different Streams. The Stream identification model is illustrated in Figure 6-1.

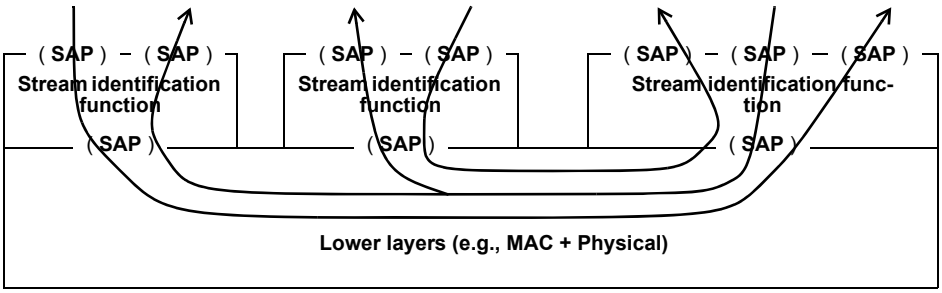

Figure 6-1—Stream identification service

Stream identification can be active (e.g., 6.6) or passive (e.g., 6.4). When accepting packets for transmission from the upper layers, an active Stream identification function (6.2) modifies the data parameters to encode the choice of SAPs, and offer the encapsulated packets to the lower layers. In the receive direction, the active Stream identification function accepts packets from the lower layers, decapsulates them, and passes them to the upper layers through the appropriate SAPs according to the Stream identification derived from the packet. A passive Stream identification function does nothing to packets passed down from the upper layers, but examines packets received from lower layers to identify the packet's Stream and determine to which SAP to pass it.

NOTE—In principle, any number of different methods for identifying and encoding Streams can be defined. Several required methods are specified in the following subclauses (6.4, 6.5, 6.6, 6.7).

A Stream is the entity to which the Qualities of Service (QoSs) are offered. It is a sequence of packets, either unicast or multicast, from a Talker to one or more Listeners. Figure 6-2 illustrates a network carrying a single Stream.

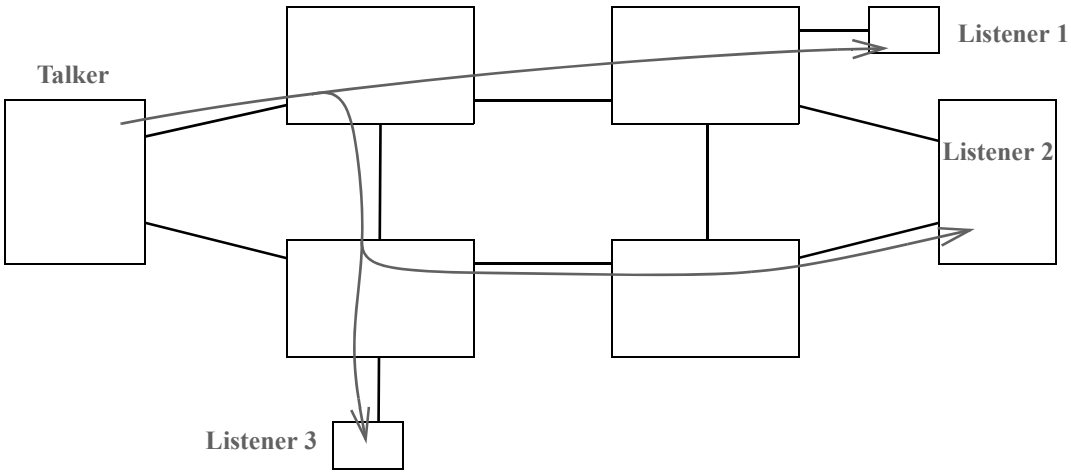

Figure 6-2—A Stream with three Listeners

Copyright © 2017 IEEE. All rights reserved.

© IEEE 2017 – All rights reserved

Documents
Document Sharing Hub

Full document details: ISO IEC IEEE 08802-1CB-2019

Stream identification is described in the following subclauses as follows:

a) Additional service subparameters required by Stream identification are in 6.1.
b) The Stream identification function is described in 6.2, and its placement in the protocol stack of a system in 6.3.
c) Four specific Stream identification functions are described: Null Stream identification (6.4), Source MAC and VLAN Stream identification (6.5), Active Destination MAC and VLAN Stream identification (6.6), and IP Stream identification (6.7).

These Stream identification functions are summarized in Table 6-1.

Table 6-1—Stream identification functions

Stream identification function	Active/passive	Examines	Overwrites	Reference
Null Stream identification	Passive	destination_address, vlan_identifier	None	6.4, 9.1.2
Source MAC and VLAN Stream identification	Passive	source_address, vlan_identifier	None	6.5, 9.1.3
Active Destination MAC and VLAN Stream identification	Active	destination_address, vlan_identifier	destination_address, vlan_identifier, priority	6.6, 9.1.4
IP Stream identification	Passive	destination_address, vlan_identifier, IP source address, IP destination address, DSCP, IP next protocol, source port, destination port	None	6.7, 9.1.5

6.1 Stream service subparameters

The ISS defined in IEEE Std 802.1AC includes a connection_identifier parameter that is of local significance (to a system) only. The parameter is not carried across the underlying service. Stream identification makes use of this parameter to carry parametrized information. Stream identification has need for more than one subparameter, but an implementor can create mathematical algorithms to combine those subparameters (and/or other subparameters for other layers) into a single connection_identifier parameter, especially since the connection_identifier's values are undefined outside the system implementing them. In this document, parameters that are assumed to be encoded in the connection_identifier are deemed *subparameters*.

The parameters of the service offered by Stream identification include the following subparameters required by the Stream identification function and other functions defined in this standard:

a) **stream_handle:** An integer identifying the Stream to which the packet belongs.
b) **sequence_number:** An unsigned integer identifying the order in which the packet was transmitted relative to other packets in the same Compound Stream.

Copyright © 2017 IEEE. All rights reserved.

© IEEE 2017 – All rights reserved

Documents
Document Sharing Hub

Full document details: ISO IEC IEEE 08802-1CB-2019

The numerical value of the stream_handle subparameter is local to a system; this subparameter is not to be confused with, for example, a field in a Protocol Data Unit (PDU) with a similar function. The value of a stream_handle is connected to protocol fields by means of protocol actions and network management. It can, but does not necessarily, have a 1:1 relationship with an explicit field in the packet.

Not every sequence of packets of interest to FRER (Clause 7) requires the relay systems along its path to identify to which Stream the packets belong. FRER does require the stream_handle and sequence_number subparameters in systems where a Sequence recovery function (7.4.2) or Individual recovery function (7.5) is configured for a Stream.

The numerical value of the sequence_number subparameter can be explicitly encoded in the packet by either the Stream identification function (6.2) or the Sequence encode/decode function (7.6).

6.2 Stream identification function

As illustrated in Figure 6-3, the Stream identification function can be described as having two SAPs (see IEEE Std 802.1AC). One SAP connects Stream identification function to the upper layers. This SAP includes a stream_handle subparameter and can include a sequence_number subparameter. The other SAP connects to the lower layers. This SAP can, but typically does not, include the stream_handle or sequence_number subparameters.

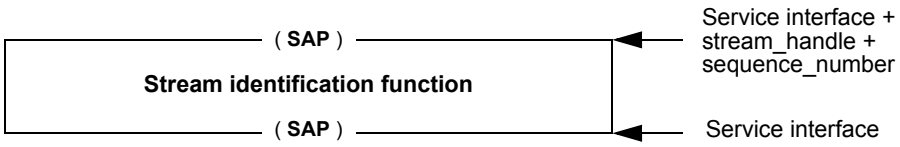

Figure 6-3—Stream identification function: single upper SAP

Equivalently, the Stream identification function can be described as having the same SAP to the lower layers, but as having an array of SAPs to the upper layers. A unique SAP corresponds to each value of the stream_handle subparameter, including one SAP for packets belonging to no known Stream. An SAP can serve more than one stream_handle value. This is illustrated in Figure 6-4.

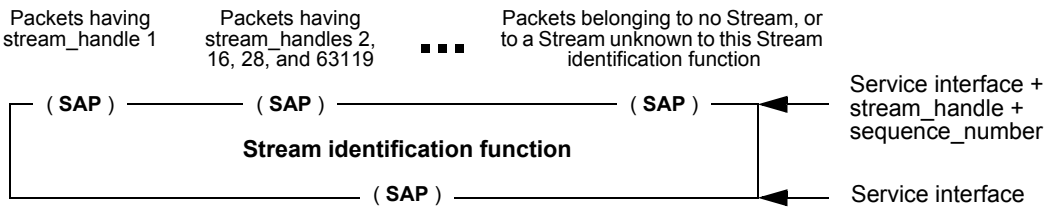

Figure 6-4—Stream identification function: array of upper SAPs

The Stream identification function performs two functions:

a) Packets received from the lower layer are examined by the Stream identification function to determine a value for the stream_handle subparameter for that packet, i.e., to determine to which Stream the packet belongs.
   1) If the packet belongs to a Stream known to this Stream identification function the resultant packet is passed, along with the stream_handle and any other subparameters (e.g., sequence_number) extracted from the packet, to the upper layers. Depending on the particular Stream identification method (or methods) employed, parameters can be modified (e.g., a tag can be removed or an address changed) by the Stream identification function.

Copyright © 2017 IEEE. All rights reserved.

© IEEE 2017 – All rights reserved

Documents
Document Sharing Hub

Full document details: ISO IEC IEEE 08802-1CB-2019