INTERNATIONAL STANDARD

ISO/IEC/IEEE 8802-1AB

First edition
2014-02-15

Information technology — Telecommunications and information exchange between systems — Local and metropolitan area networks —

Part 1AB: Station and Media Access Control Connectivity Discovery

Technologies de l'information — Télécommunications et échange d'information entre systèmes — Réseaux locaux et métropolitains —

Partie 1AB

Reference number
ISO/IEC/IEEE 8802-1AB:2014(E)

© IEEE 2009

Authorized licensed use limited to: Tsinghua University. Downloaded on February 26,2026 at 07:47:52 UTC from IEEE Xplore. Restrictions apply.

Full document details: ISO/IEC/IEEE 8802-1AB-2014

© IEEE 2009

All rights reserved. Unless otherwise specified, no part of this publication may be reproduced or utilized otherwise in any form or by any means, electronic or mechanical, including photocopying, or posting on the internet or an intranet, without permission in writing from ISO, IEC or IEEE at the respective address below.

ISO copyright office
Case postale 56
CH-1211 Geneva 20
Tel. + 41 22 749 01 11
Fax + 41 22 749 09 47
E-mail copyright@iso.org
Web www.iso.org

IEC Central Office
3, rue de Varembé
CH-1211 Geneva 20
Switzerland
E-mail inmail@iec.ch
Web www.iec.ch

Institute of Electrical and Electronics Engineers, Inc.
3 Park Avenue, New York
NY 10016-5997, USA
E-mail stds.ipr@ieee.org
Web www.ieee.org

Published in Switzerland

© IEEE 2009 – All rights reserved
Authorized licensed use limited to: Tsinghua University. Downloaded on February 26,2026 at 07:47:52 UTC from IEEE Xplore. Restrictions apply.
Documents
Document Sharing Hub
Full document details: ISO/IEC/IEEE 8802-1AB-2014

Foreword

ISO (the International Organization for Standardization) and IEC (the International Electrotechnical Commission) form the specialized system for worldwide standardization. National bodies that are members of ISO or IEC participate in the development of International Standards through technical committees established by the respective organization to deal with particular fields of technical activity. ISO and IEC technical committees collaborate in fields of mutual interest. Other international organizations, governmental and non-governmental, in liaison with ISO and IEC, also take part in the work. In the field of information technology, ISO and IEC have established a joint technical committee, ISO/IEC JTC 1.

IEEE Standards documents are developed within the IEEE Societies and the Standards Coordinating Committees of the IEEE Standards Association (IEEE-SA) Standards Board. The IEEE develops its standards through a consensus development process, approved by the American National Standards Institute, which brings together volunteers representing varied viewpoints and interests to achieve the final product. Volunteers are not necessarily members of the Institute and serve without compensation. While the IEEE administers the process and establishes rules to promote fairness in the consensus development process, the IEEE does not independently evaluate, test, or verify the accuracy of any of the information contained in its standards.

The main task of ISO/IEC JTC 1 is to prepare International Standards. Draft International Standards adopted by the joint technical committee are circulated to national bodies for voting. Publication as an International Standard requires approval by at least 75 % of the national bodies casting a vote.

Attention is called to the possibility that implementation of this standard may require the use of subject matter covered by patent rights. By publication of this standard, no position is taken with respect to the existence or validity of any patent rights in connection therewith. ISO/IEEE is not responsible for identifying essential patents or patent claims for which a license may be required, for conducting inquiries into the legal validity or scope of patents or patent claims or determining whether any licensing terms or conditions provided in connection with submission of a Letter of Assurance or a Patent Statement and Licensing Declaration Form, if any, or in any licensing agreements are reasonable or non-discriminatory. Users of this standard are expressly advised that determination of the validity of any patent rights, and the risk of infringement of such rights, is entirely their own responsibility. Further information may be obtained from ISO or the IEEE Standards Association.

ISO/IEC/IEEE 8802-1AB was prepared by the LAN/MAN Standards Committee of the IEEE Computer Society (as IEEE Std 802.1AB-2009). It was adopted by Joint Technical Committee ISO/IEC JTC 1, *Information technology*, Subcommittee SC 6, *Telecommunications and information exchange between systems*, in parallel with its approval by the ISO/IEC national bodies, under the “fast-track procedure” defined in the Partner Standards Development Organization cooperation agreement between ISO and IEEE. IEEE is responsible for the maintenance of this document with participation and input from ISO/IEC national bodies.

ISO/IEC/IEEE 8802 consists of the following parts, under the general title *Information technology — Telecommunications and information exchange between systems — Local and metropolitan area networks*:

— *Part 11: Wireless LAN medium access control (MAC) and physical layer (PHY) specifications*

— *Part 1X: Port-based network access control*

— *Part 1AB: Station and media access control connectivity discovery*

— *Part 1AE: Media access control (MAC) security*

— *Part 1AR: Secure device identity*

— *Part 1AS: Timing and synchronization for time-sensitive applications in bridged local area networks*

Documents
Document Sharing Hub

© IEEE 2009 – All rights reserved

Authorized licensed use limited to: Tsinghua University. Downloaded on February 26,2026 at 07:47:52 UTC from IEEE Xplore. Restrictions apply.

Full document details: ISO/IEC/IEEE 8802-1AB-2014

— *Part 15-4: Wireless medium access control (MAC) and physical layer (PHY) specifications for low-rate wireless personal area networks (WPANs)*

© IEEE 2009 – All rights reserved
Authorized licensed use limited to: Tsinghua University. Downloaded on February 26,2026 at 07:47:52 UTC from IEEE Xplore. Restrictions apply.
Documents
Document Sharing Hub
Full document details: ISO/IEC/IEEE 8802-1AB-2014

802.1AB™

IEEE Standard for

Local and metropolitan area networks—

Station and Media Access Control Connectivity Discovery

IEEE Computer Society

Sponsored by the
LAN/MAN Standards Committee

IEEE
3 Park Avenue
New York, NY 10016-5997, USA

17 September 2009

IEEE Std 802.1AB™-2009
(Revision of
IEEE Std 802.1AB-2005)

© IEEE 2009 – All rights reserved
Authorized licensed use limited to: Tsinghua University. Downloaded on February 26,2026 at 07:47:52 UTC from IEEE Xplore. Restrictions apply.
Documents
Document Sharing Hub
Full document details: ISO/IEC/IEEE 8802-1AB-2014

(blank page)

© IEEE 2009 – All rights reserved
Documents Document Sharing Hub
Authorized licensed use limited to: Tsinghua University. Downloaded on February 26,2026 at 07:47:52 UTC from IEEE Xplore. Restrictions apply.
Full document details: ISO/IEC/IEEE 8802-1AB-2014

IEEE Std 802.1AB™-2009
(Revision of
IEEE Std 802.1AB-2005)

IEEE Standard for
Local and metropolitan area networks—

Station and Media Access Control Connectivity Discovery

Sponsor

LAN/MAN Standards Committee
of the
IEEE Computer Society

Approved 11 September 2009

IEEE-SA Standards Board

© IEEE 2009 – All rights reserved

Documents
Document Sharing Hub

Authorized licensed use limited to: Tsinghua University. Downloaded on February 26,2026 at 07:47:52 UTC from IEEE Xplore. Restrictions apply.

Full document details: ISO/IEC/IEEE 8802-1AB-2014

Abstract: This document defines a protocol and a set of managed objects that can be used for discovering the physical topology from adjacent stations in IEEE 802® LANs.

Keywords: link layer discovery protocol, management information base, topology discovery, topology information

The Institute of Electrical and Electronics Engineers, Inc.

3 Park Avenue, New York, NY 10016-5997, USA

Copyright © 2009 by the Institute of Electrical and Electronics Engineers, Inc.

All rights reserved. Published 17 September 2009. Printed in the United States of America.

IEEE and 802 are registered trademarks in the U.S. Patent & Trademark Office, owned by The Institute of Electrical and Electronics Engineers, Incorporated.

PDF: ISBN 978-0-7381-6038-2 STD95957

Print: ISBN 978-0-7381-6039-9 STDPD95957

No part of this publication may be reproduced in any form, in an electronic retrieval system or otherwise, without the prior written permission of the publisher.

Documents
Document Sharing Hub

Copyright © 2009 IEEE. All rights reserved.

Authorized licensed use limited to: Tsinghua University. Downloaded on February 26,2026 at 07:47:52 UTC from IEEE Xplore. Restrictions apply.

Full document details: ISO/IEC/IEEE 8802-1AB-2014

IEEE Standards documents are developed within the IEEE Societies and the Standards Coordinating Committees of the IEEE Standards Association (IEEE-SA) Standards Board. The IEEE develops its standards through a consensus development process, approved by the American National Standards Institute, which brings together volunteers representing varied viewpoints and interests to achieve the final product. Volunteers are not necessarily members of the Institute and serve without compensation. While the IEEE administers the process and establishes rules to promote fairness in the consensus development process, the IEEE does not independently evaluate, test, or verify the accuracy of any of the information or the soundness of any judgments contained in its standards.

Use of an IEEE Standard is wholly voluntary. The IEEE disclaims liability for any personal injury, property or other damage, of any nature whatsoever, whether special, indirect, consequential, or compensatory, directly or indirectly resulting from the publication, use of, or reliance upon this, or any other IEEE Standard document.

The IEEE does not warrant or represent the accuracy or content of the material contained herein, and expressly disclaims any express or implied warranty, including any implied warranty of merchantability or fitness for a specific purpose, or that the use of the material contained herein is free from patent infringement. IEEE Standards documents are supplied **"AS IS."**

The existence of an IEEE Standard does not imply that there are no other ways to produce, test, measure, purchase, market, or provide other goods and services related to the scope of the IEEE Standard. Furthermore, the viewpoint expressed at the time a standard is approved and issued is subject to change brought about through developments in the state of the art and comments received from users of the standard. Every IEEE Standard is subjected to review at least every five years for revision or reaffirmation, or every ten years for stabilization. When a document is more than five years old and has not been reaffirmed, or more than ten years old and has not been stabilized, it is reasonable to conclude that its contents, although still of some value, do not wholly reflect the present state of the art. Users are cautioned to check to determine that they have the latest edition of any IEEE Standard.

In publishing and making this document available, the IEEE is not suggesting or rendering professional or other services for, or on behalf of, any person or entity. Nor is the IEEE undertaking to perform any duty owed by any other person or entity to another. Any person utilizing this, and any other IEEE Standards document, should rely upon the advice of a competent professional in determining the exercise of reasonable care in any given circumstances.

Interpretations: Occasionally questions may arise regarding the meaning of portions of standards as they relate to specific applications. When the need for interpretations is brought to the attention of IEEE, the Institute will initiate action to prepare appropriate responses. Since IEEE Standards represent a consensus of concerned interests, it is important to ensure that any interpretation has also received the concurrence of a balance of interests.For this reason, IEEE and the members of its societies and Standards Coordinating Committees are not able to provide an instant response to interpretation requests except in those cases where the matter has previously received formal consideration. A statement, written or oral, that is not processed in accordance with the IEEE-SA Standards Board Operations Manual shall not be considered the official position of IEEE or any of its committees and shall not be considered to be, nor be relied upon as, a formal interpretation of the IEEE.At lectures, symposia, seminars, or educational courses, an individual presenting information on IEEE standards shall make it clear that his or her views should be considered the personal views of that individual rather than the formal position, explanation, or interpretation of the IEEE. Comments for revision of IEEE Standards are welcome from any interested party, regardless of membership affiliation with IEEE. Suggestions for changes in documents should be in the form of a proposed change of text, together with appropriate supporting comments. Recommendations to change the status of a stabilized standard should include a rationale as to why a revision or withdrawal is required.

Comments and recommendations on standards, and requests for interpretations should be addressed to:

Secretary, IEEE-SA Standards Board
445 Hoes Lane
Piscataway, NJ 08854
USA

Authorization to photocopy portions of any individual standard for internal or personal use is granted by the Institute of Electrical and Electronics Engineers, Inc., provided that the appropriate fee is paid to Copyright Clearance Center. To arrange for payment of licensing fee, please contact Copyright Clearance Center, Customer Service, 222 Rosewood Drive, Danvers, MA 01923 USA; +1 978 750 8400. Permission to photocopy portions of any individual standard for educational classroom use can also be obtained through the Copyright Clearance Center.

Documents
Document Sharing Hub

© IEEE 2009. All rights reserved.
Authorized licensed use limited to: Tsinghua University. Downloaded on February 26,2026 at 07:47:52 UTC from IEEE Xplore. Restrictions apply.

Full document details: ISO/IEC/IEEE 8802-1AB-2014

Introduction

This introduction is not part of IEEE Std 802.1AB-2009, IEEE Standard for Local and Metropolitan Area Networks—Station and Media Access Control Connectivity Discovery.

Notice to users

Laws and regulations

Users of these documents should consult all applicable laws and regulations. Compliance with the provisions of this standard does not imply compliance to any applicable regulatory requirements. Implementers of the standard are responsible for observing or referring to the applicable regulatory requirements. IEEE does not, by the publication of its standards, intend to urge action that is not in compliance with applicable laws, and these documents may not be construed as doing so.

Copyrights

This document is copyrighted by the IEEE. It is made available for a wide variety of both public and private uses. These include both use, by reference, in laws and regulations, and use in private self-regulation, standardization, and the promotion of engineering practices and methods. By making this document available for use and adoption by public authorities and private users, the IEEE does not waive any rights in copyright to this document.

Updating of IEEE documents

Users of IEEE standards should be aware that these documents may be superseded at any time by the issuance of new editions or may be amended from time to time through the issuance of amendments, corrigenda, or errata. An official IEEE document at any point in time consists of the current edition of the document together with any amendments, corrigenda, or errata then in effect. In order to determine whether a given document is the current edition and whether it has been amended through the issuance of amendments, corrigenda, or errata, visit the IEEE Standards Association website at http://ieeexplore.ieee.org/xpl/standards.jsp, or contact the IEEE at the address listed previously.

For more information about the IEEE Standards Association or the IEEE standards development process, visit the IEEE-SA website at http://standards.ieee.org.

Errata

Errata, if any, for this and all other standards can be accessed at the following URL: http://standards.ieee.org/reading/ieee/updates/errata/index.html. Users are encouraged to check this URL for errata periodically.

Interpretations

Current interpretations can be accessed at the following URL: http://standards.ieee.org/reading/ieee/interp/index.html.

Copyright © 2009 IEEE. All rights reserved.
Authorized licensed use limited to: Tsinghua University. Downloaded on February 26,2026 at 07:47:52 UTC from IEEE Xplore. Restrictions apply.
Documents
Document Sharing Hub
Full document details: ISO/IEC/IEEE 8802-1AB-2014

Patents

Attention is called to the possibility that implementation of this standard may require use of subject matter covered by patent rights. By publication of this standard, no position is taken with respect to the existence or validity of any patent rights in connection therewith. A patent holder or patent applicant has filed a statement of assurance that it will grant licenses under these rights without compensation or under reasonable rates, with reasonable terms and conditions that are demonstrably free of any unfair discrimination to applicants desiring to obtain such licenses. Other Essential Patent Claims may exist for which a statement of assurance has not been received. The IEEE is not responsible for identifying Essential Patent Claims for which a license may be required, for conducting inquiries into the legal validity or scope of Patents Claims, or determining whether any licensing terms or conditions provided in connection with submission of a Letter of Assurance, if any, or in any licensing agreements are reasonable or non-discriminatory. Users of this standard are expressly advised that determination of the validity of any patent rights, and the risk of infringement of such rights, is entirely their own responsibility. Further information may be obtained from the IEEE Standards Association.

Documents
Document Sharing Hub

Copyright © 2009 IEEE. All rights reserved. x

Authorized licensed use limited to: Tsinghua University. Downloaded on February 26,2026 at 07:47:52 UTC from IEEE Xplore. Restrictions apply.

Full document details: ISO/IEC/IEEE 8802-1AB-2014

Contents

1. Overview ... 1
   1.1 Scope ... 1
   1.2 Purpose ... 2
2. Normative references ... 3
3. Definitions and numerical representation ... 5
   3.1 Definitions ... 5
   3.2 Numerical representation ... 6
4. Acronyms and abbreviations ... 7
5. Conformance ... 9
   5.1 Terminology ... 9
   5.2 Protocol Implementation Conformance Statement (PICS) ... 9
   5.3 Required capabilities ... 9
   5.4 Optional capabilities ... 10
6. Principles of operation ... 11
   6.1 Transmission and reception ... 12
   6.2 LLDP operational modes ... 12
   6.3 LLDP information categories ... 13
   6.4 TLV selection ... 14
   6.5 Transmission principles ... 14
   6.6 Reception principles ... 14
   6.7 Systems with multiple LLDP Agents ... 15
7. LLDPDU transmission, reception, and addressing ... 19
   7.1 Destination address ... 19
   7.2 Source address ... 21
   7.3 Ethertype use and encoding ... 22
   7.4 LLDPDU reception ... 22
8. LLDPDU and TLV formats ... 23
   8.1 LLDPDU bit and octet ordering conventions ... 23
   8.2 LLDPDU format ... 23
   8.3 TLV categories ... 24
   8.4 Basic TLV format ... 24
   8.5 Basic management TLV set formats and definitions ... 26
   8.6 Organizationally Specific TLVs ... 34
9. LLDP agent operation ... 37
   9.1 Overview ... 37
   9.2 State machines ... 40
10. LLDP management ... 57
   10.1 Data storage and retrieval ... 57
   10.2 The LLDP management entity's responsibilities ... 57

Copyright © 2009 IEEE. All rights reserved.
Authorized licensed use limited to: Tsinghua University. Downloaded on February 26,2026 at 07:47:52 UTC from IEEE Xplore. Restrictions apply.
Documents
Document Sharing Hub
Full document details: ISO/IEC/IEEE 8802-1AB-2014

10.3 Managed objects ... 59
10.4 Data types ... 59
10.5 LLDP variables ... 59

11. LLDP MIB definitions ... 62

11.1 Internet Standard Management Framework ... 62
11.2 Structure of the LLDP MIB ... 62
11.3 Relationship to other MIBs ... 67
11.4 Security considerations for LLDP base MIB module ... 68
11.5 LLDP MIB modules , ... 70

Annex A (normative) PICS proforma ... 115

A.1 Introduction ... 115
A.2 Abbreviations and special symbols ... 115
A.3 Instructions for completing the PICS proforma ... 116
A.4 Major capabilities and options ... 119

Annex B (normative) PTOPO MIB update ... 121

Annex C (informative) Example LLDP transmission frame formats ... 122

C.1 Direct-encoded LLDP frame format ... 122
C.2 SNAP-encoded LLDP frame format ... 122

Annex D (informative) Using LLDP to detect potential communication problems ... 123

D.1 Overview ... 123
D.2 IEEE 802.1 Organizationally Specific TLVs ... 123
D.3 IEEE 802.3 Organizationally Specific TLVs ... 125

Annex E (normative) IEEE 802.1 Organizationally Specific TLVs ... 127

E.1 Requirements of the IEEE 802.1 Organizationally Specific TLV set ... 127
E.2 Port VLAN ID TLV ... 127
E.3 Port And Protocol VLAN ID TLV ... 128
E.4 VLAN Name TLV ... 129
E.5 Protocol Identity TLV ... 130
E.6 VID Usage Digest TLV ... 131
E.7 Management VID TLV ... 131
E.8 Link Aggregation TLV ... 132
E.9 IEEE 802.1 Organizationally Specific TLV management ... 132
E.10 IEEE 802.1/LLDP extension MIB ... 133
E.11 PICS proforma for IEEE 802.1 Organizationally Specific TLV extensions ... 163

Annex F (normative) IEEE 802.3 Organizationally Specific TLVs ... 165

F.1 Requirements of the IEEE 802.3 Organizationally Specific TLV set ... 165
F.2 MAC/PHY Configuration/Status TLV ... 165
F.3 Power Via MDI TLV ... 167
F.4 Maximum Frame Size TLV ... 168
F.5 IEEE 802.3 Organizationally Specific TLV selection management ... 168
F.6 IEEE 802.3/LLDP extension MIB ... 169
F.7 PICS proforma for IEEE 802.3 TLV extensions ... 187

Annex G (informative) Bibliography ... 189

Annex H (informative) IEEE list of participants ... 191

Documents
Document Sharing Hub

Copyright © 2009 IEEE. All rights reserved.
Authorized licensed use limited to: Tsinghua University. Downloaded on February 26,2026 at 07:47:52 UTC from IEEE Xplore. Restrictions apply.
Full document details: ISO/IEC/IEEE 8802-1AB-2014

List of figures

Figure 6-1 LLDP agent and its relationship to its LLC entity 11
Figure 6-2 Relationship between LLDP agents, LLC Entities, MSAPs, and the LLDP management entity 15
Figure 6-3 LLDP in a MAC Bridge 16
Figure 6-4 LLDP in an end system with port-based network access control 16
Figure 6-5 LLDP in a MAC Bridge that uses port-based network access control on both ports 17
Figure 6-6 Scope of group MAC addresses 17
Figure 6-7 Multiplexing and demultiplexing using shims 18
Figure 7-1 MSDU format 19
Figure 8-1 LLDPDU Format 23
Figure 8-2 Basic TLV format 24
Figure 8-3 End Of LLDPDU TLV format 26
Figure 8-4 Chassis ID TLV Format 26
Figure 8-5 Port ID TLV format 28
Figure 8-6 Time To Live TLV format 29
Figure 8-7 Port Description TLV format 29
Figure 8-8 System Name TLV format 30
Figure 8-9 System Description TLV format 31
Figure 8-10 System Capabilities TLV format 31
Figure 8-11 Management Address TLV format 33
Figure 8-12 Basic format for Organizationally Specific TLVs 35
Figure 9-1 Transmit state machine 54
Figure 9-2 Receive state machine 55
Figure 9-3 Transmit timer state machine 56
Figure 11-1 LLDP MIB block diagram 62
Figure C.1 IEEE 802.3 LLDP frame format 122
Figure C.2 IEEE 802.11 LLDP frame format 122
Figure E.1 Port VLAN ID TLV Format 128
Figure E.2 Port And Protocol VLAN ID TLV Format 128
Figure E.3 VLAN Name TLV format 129
Figure E.4 Protocol Identity TLV format 130
Figure E.5 VID Usage Digest TLV format 131
Figure E.6 Management VID TLV format 131
Figure E.7 Link Aggregation TLV format 132
Figure F.1 MAC/PHY configuration/status TLV format 166
Figure F.2 Power Via MDI TLV format 167
Figure F.3 Maximum Frame Size TLV format 168

Documents
Document Sharing Hub
Authorized licensed use limited to: Tsinghua University. Downloaded on February 26,2026 at 07:47:52 UTC from IEEE Xplore. Restrictions apply.
Copyright © 2009 IEEE. All rights reserved.
Full document details: ISO/IEC/IEEE 8802-1AB-2014

List of tables

Table 7-1 Group MAC addresses used by LLDP 20
Table 7-2 Support for MAC addresses in different systems 21
Table 7-3 LLDP Ethertype 22
Table 8-1 TLV type values 25
Table 8-2 Chassis ID subtype enumeration 27
Table 8-3 Port ID subtype enumeration 28
Table 8-4 System capabilities 32
Table 9-5 Subclause/operating mode applicability 37
Table 9-6 State machine symbols 42
Table 11-1 MIB object groups and operating mode applicability 63
Table 11-2 LLDP MIB structure and object cross reference 63
Table E.1 IEEE 802.1 Organizationally Specific TLVs 127
Table E.2 Port and protocol capability/status 129
Table E.3 Link aggregation capability/status 132
Table E.4 IEEE 802.1 extension MIB object group conformance requirements 134
Table E.5 IEEE 802.1/LLDP extension MIB object cross reference 135
Table F.1 IEEE 802.3 Organizationally Specific TLVs 165
Table F.2 IEEE 802.3 auto-negotiation support/status 166
Table F.3 MDI power capabilities/status 167
Table F.4 IEEE 802.1 extension MIB object group conformance requirements 170
Table F.5 IEEE 802.3/LLDP extension MIB cross reference 170

Documents
Document Sharing Hub
Authorized licensed use limited to: Tsinghua University. Downloaded on February 26,2026 at 07:47:52 UTC from IEEE Xplore. Restrictions apply.
Copyright © 2009 IEEE. All rights reserved.

Full document details: ISO/IEC/IEEE 8802-1AB-2014

Documents
Document Sharing Hub

Authorized licensed use limited to: Tsinghua University. Downloaded on February 26,2026 at 07:47:52 UTC from IEEE Xplore. Restrictions apply.

Full document details: ISO/IEC/IEEE 8802-1AB-2014

IEEE Standard for
Local and metropolitan area networks—

Station and Media Access Control Connectivity Discovery

IMPORTANT NOTICE: This standard is not intended to ensure safety, security, health, or environmental protection in all circumstances. Implementers of the standard are responsible for determining appropriate safety, security, environmental, and health practices or regulatory requirements.

This IEEE document is made available for use subject to important notices and legal disclaimers. These notices and disclaimers appear in all publications containing this document and may be found under the heading "Important Notice" or "Important Notices and Disclaimers Concerning IEEE Documents." They can also be obtained on request from IEEE or viewed at http://standards.ieee.org/IPR/disclaimers.html.

1. Overview

The Link Layer Discovery Protocol (LLDP) specified in this standard allows stations attached to an IEEE 802® LAN to advertise, to other stations attached to the same IEEE 802 LAN, the major capabilities provided by the system incorporating that station, the management address or addresses of the entity or entities that provide management of those capabilities, and the identification of the station's point of attachment to the IEEE 802 LAN required by those management entity or entities.

The information distributed via this protocol is stored by its recipients in a standard Management Information Base (MIB), making it possible for the information to be accessed by a Network Management System (NMS) using a management protocol such as the Simple Network Management Protocol (SNMP).

1.1 Scope

The scope of this standard is to define a protocol and management elements, suitable for advertising information to stations attached to the same IEEE 802 LAN, for the purpose of populating physical topology and device discovery management information databases. The protocol facilitates the identification of

Documents
Document Sharing Hub

Copyright © 2009 IEEE. All rights reserved.

Authorized licensed use limited to: Tsinghua University. Downloaded on February 26,2026 at 07:47:52 UTC from IEEE Xplore. Restrictions apply.

Full document details: ISO/IEC/IEEE 8802-1AB-2014

stations connected by IEEE 802 LANs/MANs, their points of interconnection, and access points for management protocols.

This standard defines a protocol that

a) Advertises connectivity and management information about the local station to adjacent stations on the same IEEE 802 LAN.
b) Receives network management information from adjacent stations on the same IEEE 802 LAN.
c) Operates with all IEEE 802 access protocols and network media.
d) Establishes a network management information schema and object definitions that are suitable for storing connection information about adjacent stations.
e) Provides compatibility with the IETF PTOPO MIB (IETF RFC 2922 [B14]).[1]

1.2 Purpose

An IETF MIB (IETF RFC 2922 [B14]), as well as a number of vendor specific MIBs, have been created to describe a network's physical topology and associated systems within that topology.

This standard specifies the necessary protocol and management elements to

a) Facilitate multi-vendor inter-operability and the use of standard management tools to discover and make available physical topology information for network management.
b) Make it possible for network management to discover certain configuration inconsistencies or malfunctions that can result in impaired communication at higher layers.
c) Provide information to assist network management in making resource changes and/or re-configurations that correct configuration inconsistencies or malfunctions identified in b) above.

[1]The numbers in brackets correspond to those in the bibliography in Annex G.

Copyright © 2009 IEEE. All rights reserved.
Authorized licensed use limited to: Tsinghua University. Downloaded on February 26,2026 at 07:47:52 UTC from IEEE Xplore. Restrictions apply.
Documents
Document Sharing Hub
Full document details: ISO/IEC/IEEE 8802-1AB-2014

2. Normative references

The following referenced documents are indispensable for the application of this document (i.e., they must be understood and used, so each referenced document is cited in the text and its relationship to this document is explained). For dated references, only the edition cited applies. For undated references, the latest edition of the referenced document (including any amendments or corrigenda) applies.

IEEE Std 802®, IEEE Standard for Local and Metropolitan Area Networks: Overview and Architecture.[2, 3]

IEEE Std 802a™, IEEE Standard for Local and Metropolitan Area Networks: Overview and Architecture—Amendment 1: Ethertypes for Prototype and Vendor-Specific Protocol Development.

IEEE Std 802.1AE™, IEEE Standard for Local and Metropolitan Area Networks—Media Access Control (MAC) Security.

IEEE Std 802.1AX™, IEEE Standard for Local and Metropolitan Area Networks—Link Aggregation.

IEEE Std 802.1D™, IEEE Standard for Local and Metropolitan Area Networks: Media Access Control (MAC) Bridges.

IEEE Std 802.1Q™, IEEE Standards for Local and Metropolitan Area Networks: Virtual Bridged Local Area Networks.

IEEE Std 802.1X™, IEEE Standard for Local and Metropolitan Area Networks—Port-Based Network Access Control.

IEEE Std 802.3™, IEEE Standard for Information technology—Telecommunications and information exchange between systems—Local and metropolitan area networks—Specific requirements—Part 3: Carrier Sense Multiple Access with Collision Detection (CSMA/CD) Access Method and Physical Layer Specifications.

IETF RFC 1812, Requirements for IP Version 4 Routers, Baker, F., June 1995.[4]

IETF RFC 2108, Definitions of Managed Objects for IEEE 802.3 Repeater Devices using SMIv2, de Graaf, K., and Romascanu, D., February 1997.

IETF RFC 2863, The Interfaces Group MIB, McCloghrie, K. and Kastenholz, F., June 2000.

IETF RFC 3046, DHCP Relay Agent Information Option, Patrick, M., January 2001.

IETF RFC 3232, Assigned Numbers: RFC 1700 is Replaced by an On-line Database, Reynolds, J., January 2002.[5]

IETF RFC 3410, Introduction and Applicability Statements for Internet Standard Management Framework, Case, J., Mundy, R.,Partain, D., and Stewart, B., December 2002.

---

[2]IEEE and 802 are registered trademarks in the U.S. Patent & Trademark Office, owned by the Institute of Electrical and Electronics Engineers, Incorporated.

[3]IEEE publications are available from the Institute of Electrical and Electronics Engineers, 445 Hoes Lane, Piscataway, NJ 08855, USA (http://standards.ieee.org).

[4]Internet RFCs are retrievable by FTP at ftp://ftp.rfc-editor.org/in-notes/rfcnnnn.txt, or by Web browser at http://www.rfc-editor.org/rfcNNNN.txt (where NNNN is the RFC number prefixed with zeroes as necessary to make a four digit number). If the RFC number is not known, there is a search facility at http://www.rfc-editor.org/.

[5]The IETF RFC 3232 ianaAddressFamilyNumbers on-line database module is accessible through a web page (currently, http://www.iana.org).

Documents
Document Sharing Hub

Copyright © 2009 IEEE. All rights reserved.
Authorized licensed use limited to: Tsinghua University. Downloaded on February 26,2026 at 07:47:52 UTC from IEEE Xplore. Restrictions apply.

Full document details: ISO/IEC/IEEE 8802-1AB-2014

IETF RFC 3417, Transport Mappings for the Simple Network Management Protocol (SNMP), Presuhn, R., Case, J., McCloghrie, K., Rose, M., Waldbusser, S., December 2002.

IETF RFC 3418, Management Information Base (MIB) for the Simple Network Management Protocol (SNMP), Presuhn, R., ED., December 2002.

IETF RFC 3621, Power Ethernet MIB, Berger, A. and Romascanu, D., December 2003.

IETF RFC 3629, UTF-8, a transformation format of ISO 10646, Yergeau, F. November 2003.

IETF RFC 4133, Entity MIB (Version 3), A. Bierman, K. McCloghrie, August 2005.

IETF RFC 4293, Management Information Base for the Internet Protocol (IP), S. Routhier, Ed., April 2006.

IETF RFC 4363, Definitions of Managed Objects for Bridges with Traffic Classes, Multicast Filtering, and Virtual LAN Extensions, D. Levi, D. Harrington, January 2006.

IETF RFC 4502, Remote Network Monitoring Management Information Base Version 2, Waldbusser, S., May 2006.

IETF RFC 4546, Radio Frequency (RF) Interface Management Information Base for Data over Cable Service Interface Specifications (DOCSIS) 2.0 Compliant RF Interfaces, D. Raftus, E. Cardona, June 2006.

IETF RFC 4639, Cable Device Management Information Base for Data-Over-Cable Service Interface Specification (DOCSIS) Compliant Cable Modems and Cable Modem Termination Systems, R. Woundy, K. Marez, December 2006.

IETF RFC 4789, Simple Network Management Protocol (SNMP) over IEEE 802 Networks, J. Schoenwaelder, T. Jeffree, November 2006.

IETF RFC 4836, Definitions of Managed Objects for IEEE 802.3 Medium Attachment Units (MAUs), E. Beili, April 2007.

ISO/IEC 8824-1 [ITU-T Rec. X.680 (2002)], Abstract Syntax Notation One (ASN.1): Specification of Basic Notation.[6]

[6]ASN.1 standards are available on-line by Web browser at http://asn1.elibel.tm.fr/en/standards/index.htm#asn1.

Copyright © 2009 IEEE. All rights reserved.
Authorized licensed use limited to: Tsinghua University. Downloaded on February 26,2026 at 07:47:52 UTC from IEEE Xplore. Restrictions apply.

Documents
Document Sharing Hub

Full document details: ISO/IEC/IEEE 8802-1AB-2014

3. Definitions and numerical representation

3.1 Definitions

For the purposes of this document, the following terms and definitions apply. The *IEEE Standards Dictionary: Glossary of Terms & Definitions* should be referenced for terms not defined in this clause.[7]

alpha-numeric information: Information that is encoded using the 8-bit Universal Character Set (UCS)/ Unicode Transformation Format (UTF-8) octet sequence [IETF RFC 3629].

chassis: A physical component incorporating one or more IEEE 802® LAN stations and their associated application functionality.

chassis identifier: An administratively assigned name that identifies the particular chassis within the context of an administrative domain that comprises one or more networks.

IEEE 802® LAN: Local area network (LAN) technologies that provide a media access control (MAC) Service equivalent to the MAC Service defined in ISO/IEC 15802-1. IEEE 802 LANs include IEEE Std 802.3™, IEEE Std 802.5™ [B3], IEEE Std 802.11™ [B4], IEEE Std 802.16™ [B5], IEEE Std 802.17™ [B6], and ISO 9314-2 LANs.

IEEE 802® LAN station: An IEEE 802-compatible entity that incorporates all the necessary mechanisms to participate in media access control of an IEEE 802 LAN, and that is at least capable of providing the MAC service plus the mandatory capabilities of the LLC.

NOTE—For example, routers and host computers are stations in a bridged network. Bridges, in addition to their relay function, also include station capabilities.[8]

Link Layer Discovery Protocol (LLDP): A media-independent protocol capable of running on all IEEE 802® LAN stations and to allow an LLDP agent to learn the connectivity and management information from adjacent stations.

LLDP agent: The protocol entity that implements LLDP for a particular MSAP associated with a Port.

MAC service access point (MSAP): The access point for MAC services provided to the LLC sublayer.

MSAP identifier: The identifier of a MAC service access point.

NOTE—In this standard, the concatenation of the chassis identifier and the port identifier is used by LLDP as an MSAP identifier, to identify the port associated with an IEEE 802® LAN station.

management entity: The protocol entity that implements a particular network management protocol and that provides access support to a MIB associated with the protocol and implemented on a host chassis.

Management Information Base (MIB): The instantiation of all MIB modules in a managed entity (e.g., system or device).

Management Information Base module (MIB module): The specification or schema for a data base that can be populated with the information required to support a network management information system.

network: An interconnected group of systems, each comprising one or more IEEE 802® LAN stations.

[7]The *IEEE Standards Dictionary: Glossary of Terms & Definitions* is available at http://shop.ieee.org/.

[8]Notes in text, tables, and figures are given for information only and do not contain requirements needed to implement the standard.

Documents Document Sharing Hub

Copyright © 2009 IEEE. All rights reserved.

Authorized licensed use limited to: Tsinghua University. Downloaded on February 26,2026 at 07:47:52 UTC from IEEE Xplore. Restrictions apply.

Full document details: ISO/IEC/IEEE 8802-1AB-2014

Network Management System (NMS): A management system that is capable of utilizing the information in a MIB.

object identifier (OID): An identifier used to name an object. Structurally, an OID consists of a node in a hierarchically-assigned namespace, formally defined in ISO/IEC 8824-1, Abstract Syntax Notation 1 (ASN.1). OIDs are used in this standard to identify MIB modules and the objects they contain.

physical network topology: The identification of systems, of IEEE 802® LAN stations that compose each system, and of the IEEE 802 LAN stations that attach to the same IEEE 802 LAN.

port: The entity in a chassis/system to support an MSAP. A port incorporates one and only one MSAP and identifies the collection of manageable entities that provide the MAC Service at the MSAP.

port identifier: An administratively assigned name that identifies the particular port within the context of a system, where the identification is convenient, local to the system, and persistent for the system's use and management (whereas the MAC address that globally identifies the MSAP can not be).

system: A managed collection of hardware and software components incorporating one or more chassis, stations and ports.

station only: A non-forwarding IEEE 802® LAN station such as a user workstation, network file server, or print server.

type, length, value (TLV): A short, variable length encoding of an information element consisting of sequential type, length, and value fields where the type field identifies the type of information, the length field indicates the length of the information field in octets, and the value field contains the information, itself.

3.2 Numerical representation

Decimal, hexadecimal, and binary numbers are used within this document. For clarity, decimal numbers are generally used to represent counts, hexadecimal numbers are used to represent addresses, and binary numbers are used to describe bit patterns within binary fields.

Decimal numbers are represented in their usual 0, 1, 2, … format. Hexadecimal numbers are represented by a string of one or more hexadecimal (0–9, A–F) digits followed by the subscript 16, except in C-code contexts, where they are written as `0x123EF2` etc. Binary numbers are represented by a string of one or more binary (0,1) digits, followed by the subscript 2. Thus the decimal number "26" may also be represented as "$1A_{16}$" or "11010_2".

MAC addresses, Ethertype values, and OUI/EUI values are represented as strings of 8-bit hexadecimal numbers separated by hyphens and without a subscript, as for example "01-80-C2-00-00-15" or "AA-55-11", using the hexadecimal representation defined in IEEE Std 802.

Copyright © 2009 IEEE. All rights reserved.
Authorized licensed use limited to: Tsinghua University. Downloaded on February 26,2026 at 07:47:52 UTC from IEEE Xplore. Restrictions apply.
Documents
Document Sharing Hub
Full document details: ISO/IEC/IEEE 8802-1AB-2014

4. Acronyms and abbreviations

BSSID	basic service set identification
DA	Destination Address
DS	Distribution System
EUI	Extended Unique Identifier
FCS	Frame Check Sequence
ID	Identifier
IETF	Internet Engineering Task Force
KaY	MAC Security Key Agreement Entity
LLC	logical link control (sublayer)
LLDP	Link Layer Discovery Protocol
LLDPDU	LLDP data unit
LSAP	link service access point
MAC	media access control (sublayer)
MAU	medium attachment unit
MDI	media dependent interface
MIB	Management Information Base (module)
MSAP	MAC service access point
MSDU	MAC service data unit
NMS	Network Management System
OID	object identifier
OUI	organizationally unique identifier
PD	Powered Device
PHY	physical (sublayer)
PMD	physical media dependent (sublayer)
PSE	Power Sourcing Equipment
PVID	port VLAN ID

Documents
Document Sharing Hub

Copyright © 2009 IEEE. All rights reserved.
Authorized licensed use limited to: Tsinghua University. Downloaded on February 26,2026 at 07:47:52 UTC from IEEE Xplore. Restrictions apply.

Full document details: ISO/IEC/IEEE 8802-1AB-2014

PPVID	port and protocol VLAN ID
PTOPO	the name of the IETF physical topology MIB
RFC	Request for comments
SA	Source Address
SecY	MAC Security Entity
SNAP	Subnetwork Access Protocol
SNMP	Simple Network Management Protocol
STP	Spanning Tree Protocol
TPMR	Two-port MAC relay
TLV	type, length, value
TTL	time to live (value)
UCS	Universal Character Set
UTF-8	8-bit UCS/Unicode Transformation Format
VID	VLAN ID

Copyright © 2009 IEEE. All rights reserved.
Authorized licensed use limited to: Tsinghua University. Downloaded on February 26,2026 at 07:47:52 UTC from IEEE Xplore. Restrictions apply.
Documents
Document Sharing Hub
Full document details: ISO/IEC/IEEE 8802-1AB-2014

5. Conformance

This clause specifies the mandatory and optional capabilities provided by conformant implementations of this standard.

5.1 Terminology

For consistency with IEEE and existing IEEE 802.1™ standards terminology, requirements placed upon conformant implementations of this standard are expressed using the following terminology:

a) *shall* is used for mandatory requirements.
b) *may* is used to describe implementation or administrative choices ("may" means "is permitted to", and hence, "may" and "may not" mean precisely the same thing).
c) *should* is used for recommended choices (the behaviors described by "should" and "should not" are both permissible but not equally desirable choices).

The PICS proforma (see Annex A) reflects the occurrences of the words *shall*, *may*, and *should* within the standard.

The standard avoids needless repetition and apparent duplication of its formal requirements by using is, is not, are, and are not for definitions and the logical consequences of conformant behavior. Behavior that is permitted but is neither always required nor directly controlled by an implementor or administrator, or whose conformance requirement is detailed elsewhere, is described by can. Behavior that never occurs in a conformant implementation or system of conformant implementations is described by can not. The word *allow* is used as a replacement for the phrase "Support the ability for," and the word *capability* means "is able to, or can be configured to."

5.2 Protocol Implementation Conformance Statement (PICS)

The supplier of an implementation that is claimed to conform to this standard shall complete a copy of the PICS proforma provided in Annex A and shall provide the information necessary to identify both the supplier and the implementation.

5.3 Required capabilities

A system for which conformance to this standard is claimed shall, for all ports for which support is claimed, include the following capabilities:

a) If port access is controlled by IEEE Std 802.1X,[9] LLDP exchanges shall be supported through the controlled port, as specified in Clause 6.
b) The destination and source addressing shall conform to 7.1 and 7.2.
c) Ethertype encapsulation shall conform to 7.3.
d) LLDPDU recognition and reception shall conform to the operation of the receive state machine as defined in 9.2.9.
e) LLDPDU encapsulation shall conform to the specifications in 8.2.
f) The basic TLV format capability shall be implemented as defined in 8.4.
g) The basic management set of TLVs shall be implemented as defined in 8.5.
h) The Organizationally Specific TLV format capability shall be implemented as defined in 8.6.

[9]Information on references can be found in Clause 2.

Documents
Document Sharing Hub

Copyright © 2009 IEEE. All rights reserved.
Authorized licensed use limited to: Tsinghua University. Downloaded on February 26,2026 at 07:47:52 UTC from IEEE Xplore. Restrictions apply.
Full document details: ISO/IEC/IEEE 8802-1AB-2014

i) The protocol shall conform to the specifications for all Clause 9 subclauses indicated in Table 9-1 for the particular operating mode (transmit only, receive only, or transmit and receive) being implemented.
j) If receipt of LLDPDUs is supported, for every set of TLVs (the basic management set and any organizationally specific sets) supported, support shall be implemented for receipt of every TLV defined in the set.
k) If transmission of LLDPDUs is supported, for every set of TLVs (the basic management set and any organizationally specific sets) supported, support shall be implemented for transmission of every TLV defined in the set.
l) If transmission of LLDPDUs is supported, for every set of TLVs (the basic management set and any organizationally specific sets) supported, a capability shall be implemented for users to determine which optional TLVs are transmitted in any particular LLDPDU.
m) If SNMP is supported, then
    1) The system shall conform to the LLDP management specifications in Clause 11 and shall implement the sections of version 2 of the basic LLDP MIB indicated in Table 11-1 for the operating mode being implemented.
    2) The system shall support at least one of the transport mappings defined by IETF RFC 3417 or IETF RFC 4789.
n) If SNMP is not supported, the system shall provide storage and retrieval capability equivalent to the functionality specified in 10.1 for the operating mode being implemented.

5.4 Optional capabilities

A system for which conformance to this standard is claimed may, for each port for which support is claimed, support the following capabilities:

a) Implement the entire IEEE 802.1 Organizationally Specific TLV extension set and the associated IEEE 802.1 version 2 MIB extension capability defined in Annex .
b) Implement the entire IEEE 802.3 Organizationally Specific TLV extension set and the associated IEEE 802.3 version 2 MIB extension capability defined in Annex .
c) If port access is controlled by IEEE Std 802.1X, LLDP exchanges may be supported through the uncontrolled port, as specified in Clause 6.

Copyright © 2009 IEEE. All rights reserved.
Authorized licensed use limited to: Tsinghua University. Downloaded on February 26,2026 at 07:47:52 UTC from IEEE Xplore. Restrictions apply.
Documents
Document Sharing Hub
Full document details: ISO/IEC/IEEE 8802-1AB-2014

6. Principles of operation

LLDP is a link layer protocol that allows an IEEE 802 LAN station to advertise the capabilities and current status of the system associated with an MSAP. The MSAP provides the MAC service to an LLC Entity, and that LLC Entity provides an LSAP to an LLDP agent that transmits and receives information to and from the LLDP agents of other stations attached to the same LAN. The information distributed and received in each LLDPDU is stored in one or more Management Information Bases (MIBs). Figure 6-1 illustrates the LLDP agent and its relationship to its LLC Entity and MSAP, and to additional MIBs designed by the IETF, IEEE 802, and others.

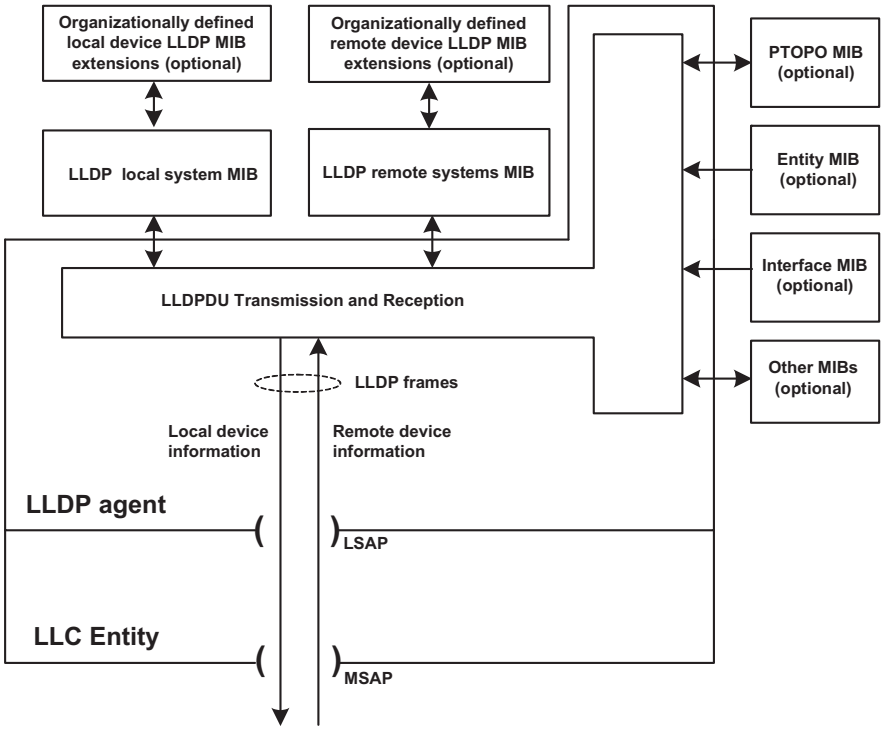

Figure 6-1—LLDP agent and its relationship to its LLC entity

This clause describes general principles of LLDP operation. The following clauses specify transmission, reception, and addressing of LLPDUs (Clause 7); LLDPDU formats (Clause 8); operation of each LLDP agent in detail including state machines (Clause 9); management of LLDP (Clause 10); and the MIB module used for LLDP management (Clause 11).

NOTE 1—For the purposes of this standard, the terms “LLC” and “LLC entity” include the service provided by the operation of entities that support protocol discrimination using an Ethertype; i.e., protocol discrimination based on the Type interpretation of the Length/Type field as specified in IEEE Std 802.3, or the use of the SNAP encapsulation of Ethertypes as described in IEEE Std 802. Hence, “LSAP” in the above description can refer to the use of IEEE Std 802.2 LLC addresses, or an Ethertype, as a means of higher layer protocol identification.

NOTE 2—LLC Entity also provides distinct LSAPs to other higher layer protocol entities (such as those responsible for the Spanning Tree Protocol and IP). In a bridge, the LLC Entity associated with each Bridge Port is directly connected to the attached LAN, as discussed in IEEE Std 802.1D-2004, 7.12.7 and in IEEE Std 802.1Q-2005, 8.13.9, so the operation of LLDP is unaffected by the spanning tree Port State.

Documents
Document Sharing Hub

Copyright © 2009 IEEE. All rights reserved.

Authorized licensed use limited to: Tsinghua University. Downloaded on February 26,2026 at 07:47:52 UTC from IEEE Xplore. Restrictions apply.

Full document details: ISO/IEC/IEEE 8802-1AB-2014

6.1 Transmission and reception

The information fields in each LLDP frame are contained in a Link Layer Discovery Protocol Data Unit (LLDPDU) as a sequence of variable length information elements, that each include type, length, and value fields (known as TLVs), where

a) Type identifies what kind of information is being sent.
b) Length indicates the length of the information string in octets.
c) Value is the actual information that needs to be sent (for example, a binary bit map or an alpha-numeric string that can contain one or more fields).

Each LLDPDU contains the following four mandatory TLVs (see Table 8-1), and can contain optional TLVs as selected by network management:

d) A Chassis ID TLV.
e) A Port ID TLV.
f) A Time To Live TLV.
g) Zero or more optional TLVs, as allowed by the maximum size of the LLDPDU.
h) An End Of LLDPDU TLV.

The chassis ID and the port ID values are concatenated to form a logical MSAP identifier that is used by the recipient to identify the sending LLDP agent/port. Both the chassis ID and port ID values can be defined in a number of convenient forms. Once selected, however, the chassis ID/port ID value combination remains the same as long as the particular port remains operable.

A non-zero value in the time to live (TTL) field of the Time To Live TLV tells the receiving LLDP agent how long all information pertaining to this LLDPDU's MSAP identifier is valid so that all the associated information can later be automatically discarded by the receiving LLDP agent if the sender fails to update it in a timely manner. A zero value indicates that any information pertaining to this LLDPDU's MSAP identifier is to be discarded immediately.

NOTE—A TTL value of zero can be used, for example, to signal that the sending port has initiated a port shutdown procedure.

The End Of LLDPDU TLV marks the end of the LLDPDU.

The format for the LLDPDU is defined in 8.2. The TLV categories and the basic TLV format are defined in 8.3 and 8.4. The specific format and field contents for the Chassis ID TLV are defined in 8.5.2; for the Port ID TLV, in 8.5.3; for the Time To Live TLV in 8.5.4; and for the End Of LLDPDU TLV, in 8.5.1.

6.2 LLDP operational modes

LLDP is a one way protocol. An LLDP agent can transmit information about the capabilities and current status of the system associated with its MSAP identifier. The LLDP agent can also receive information about the capabilities and current status of the system associated with a remote MSAP identifier. LLDP does not itself contain a mechanism for soliciting specific information from other LLDP agents, nor does it provide a specific means of confirming the receipt of information.

NOTE—The LLDP protocol is designed to advertise information useful for discovering pertinent information about a remote port and to populate topology MIBs. It is not intended to act as a configuration protocol for remote systems, nor as a mechanism to signal control information between ports. During the operation of LLDP, it may be possible to discover configuration inconsistencies between systems on the same IEEE 802 LAN. LLDP does not provide a mechanism to resolve those inconsistencies. Rather, it provides a means to report discovered information to higher layer management entities.

Copyright © 2009 IEEE. All rights reserved.
Authorized licensed use limited to: Tsinghua University. Downloaded on February 26,2026 at 07:47:52 UTC from IEEE Xplore. Restrictions apply.
Documents
Document Sharing Hub
Full document details: ISO/IEC/IEEE 8802-1AB-2014

LLDP allows the transmitter and the receiver to be separately enabled, making it possible to configure an implementation so the local LLDP agent can either transmit only or receive only, or so the local LLDP agent can transmit and receive LLDP information.

6.3 LLDP information categories

The following three sets of TLVs are currently defined by this standard and can be used to describe the system and/or to assist in the detection of configuration inconsistencies associated with the MSAP identifier:

a) Basic management TLV set (this set is required in all LLDP implementations).
   1) Port Description TLV.
   2) System Name TLV.
   3) System Description TLV.
   4) System Capabilities TLV (indicates both the system's capabilities and its current primary network function, such as end station, bridge, router).
   5) Management Address TLV.
b) IEEE 802.1 Organizationally Specific TLV set (this set is optional for all LLDP implementations).
   1) Port VLAN ID TLV.
   2) Port And Protocol VLAN ID TLV.
   3) VLAN Name TLV.
   4) Protocol Identity TLV.
   5) VID Usage Digest TLV.
   6) Management VID TLV.
   7) Link Aggregation TLV.
c) IEEE 802.3 Organizationally Specific TLV set (this set is optional for all LLDP implementations).
   1) MAC/PHY Configuration/Status TLV (indicates the auto-negotiation capability and the duplex/speed status of IEEE 802.3 MAC/PHYs).
   2) Power Via MDI TLV (indicates the capabilities and current status of IEEE 802.3 PMDs that either require or are able to provide power over twisted-pair copper links).
   3) Link Aggregation TLV (indicates the current link aggregation status of IEEE 802.3 MACs).
   4) Maximum Frame Size TLV (indicates the maximum supported IEEE 802.3 frame size).

NOTE 1—Other organizations can define their own organizationally specific TLV sets for use in LLDP.

Table 8-1 includes a list of the currently defined optional TLVs in the basic management set and provides subclause references for their specific definitions.

Organizationally Specific TLVs can be defined by either the professional organizations or the individual vendors that are involved with the particular functionality being implemented within a system. The basic format and procedures for defining Organizationally Specific TLVs are provided in 8.6.

Annex contains definitions of Organizationally Specific TLVs associated with IEEE Std 802.1. Annex contains definitions of Organizationally Specific TLVs associated with IEEE Std 802.3. Annex contains an informative discussion of how several Organizationally Specific TLVs could be used to detect potential problems in communications networks.

NOTE 2—The IEEE 802.3 Organizationally Specific TLV set will, in due course, be incorporated into the IEEE 802.3 standard, at which point, the version defined in IEEE Std 802.3 will become the definitive version. Once that has happened, the IEEE 802.3 material will be removed from this standard.

Documents
Document Sharing Hub

Copyright © 2009 IEEE. All rights reserved.

Authorized licensed use limited to: Tsinghua University. Downloaded on February 26,2026 at 07:47:52 UTC from IEEE Xplore. Restrictions apply.

Full document details: ISO/IEC/IEEE 8802-1AB-2014

6.4 TLV selection

Information for constructing the various TLVs to be sent is stored in the LLDP local system MIB. The selection of which particular TLVs to send is under control of network management. Information received from remote LLDP agents is stored in the LLDP remote systems MIB.

6.5 Transmission principles

Transmission can be initiated either by the expiration of a transmit countdown timing counter or by a change in the value of one or more of the information elements (managed objects) associated with the local system. When a transmit cycle is initiated, the LLDP management entity extracts the managed objects from the LLDP local system MIB and formats this information into TLVs. The TLVs are inserted into an LLDPDU that is passed to the LLDP transmit module. The LLDP transmit module prepends addressing parameters to the LLDPDU as defined in 8.2, 8.3, and 8.4. The LLDPDU and TLV formats are defined in Clause 8. The LLDP transmit state machine is described in 9.2.1 and 9.2.8.

NOTE 1—Because a transmission cycle can be initiated whenever a change occurs within the LLDP local system MIB, it is possible that a series of successive changes over a short period of time could trigger a number of LLDP frames to be sent, each reporting only a single change. LLDP utilizes a transmission delay timer that can be set by network management to ensure that there is a defined maximum number of LLDPDU transmissions in a given time period.

NOTE 2—Under normal circumstances, the information in the receiving LLDP agent's remote systems MIB is refreshed periodically to avoid being discarded due to ageing. To prevent the receiving LLDP agent's remote systems MIB information being aged out because a refresh frame has been lost in transmission, the sending LLDP agent typically sets the TTL value so that several refresh cycles can occur before the received MIB information ages out.

LLDP can disclose information about a device and network that could be considered sensitive in certain environments. Implementers are encouraged to provide controls that take into account the link protection characteristics when including information in an LLDP message. Different information can be included if an LLDP message is being sent on the uncontrolled port, the controlled port, or a MACsec protected connectivity association.

6.6 Reception principles

The LLDP receive module uses the services of the LLC entity to recognize that the incoming MA_UNITDATA.indication contains the correct combination of destination address and MSDU header values to identify it as resulting from a received LLDPDU. The LLDPDU recognition procedures are defined in 7.4 and 9.2.7.7.

6.6.1 LLDPDU and TLV error handling

The LLDPDU is checked to ensure that it contains the correct sequence of mandatory TLVs and then each optional TLV is validated in succession. LLDPDUs and TLVs that contain detectable errors are discarded. TLVs that are not recognized, but that also contain no basic format errors, are assumed to be valid and are stored for possible later retrieval by network management (see 9.2.7.7.1 and 9.2.7.4).

6.6.2 LLDP remote systems MIB update

The LLDP remote systems MIB is updated after all TLVs have been validated. LLDP remote system MIB update procedures are defined in 9.2.7.7.4, 9.2.7.7.5, and 9.2.7.4. The LLDP receive state machine is described in 9.2.1 and 9.2.9.

Copyright © 2009 IEEE. All rights reserved.
Authorized licensed use limited to: Tsinghua University. Downloaded on February 26,2026 at 07:47:52 UTC from IEEE Xplore. Restrictions apply.
Documents
Document Sharing Hub
Full document details: ISO/IEC/IEEE 8802-1AB-2014

6.7 Systems with multiple LLDP Agents

Each LLDP agent advertises a single set of information in the various TLVs it encodes in each transmitted LLPDU, and is associated with the MSAP that supports the LLC entity that the agent uses to transmit and receive. Each LLDP agent uses its LSAP directly, without the use of any additional multiplexing or addressing above the LSAP to support the use of that LSAP by multiple agents; and each LLC entity provides service to one and only one protocol entity at each of its LSAPs that it supports, using the service provided by a single MSAP. It follows that each LLDP agent makes use of a unique MSAP, and that the agent can be uniquely identified by that MSAP's identifier as specified above (7.2). A single LLDP management entity can support the operation of multiple LLDP agents within the same system. Figure 6-2 illustrates the relationship between the LLDP agents, LLC Entities, MSAPs, and the LLDP management entity.

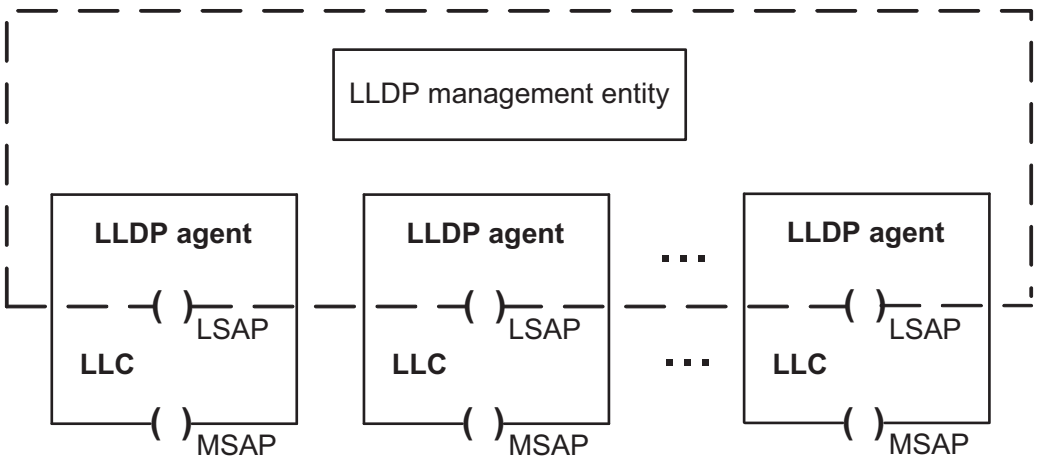

LLDP - Link Layer Discovery Protocol
LSAP - Link service access point
MSAP - MAC service access point

Figure 6-2—Relationship between LLDP agents, LLC Entities, MSAPs, and the LLDP management entity

A given system can require the use of multiple LLDP agents because it naturally comprises multiple MSAPs, or because it needs to be able to transmit different information (different sets of TLVs) to different sets of peers. These sets of peers can be determined by the way that the MAC service is supported within the system (see 6.1.8 of IEEE Std 802.1Q-2005 for a description of the connectionless connectivity that characterizes an IEEE 802 LAN). A MAC Bridge (see IEEE Std 802.1D, IEEE Std 802.1Q), for example, attaches to multiple LANs, each providing the MAC service at a distinct MSAP. A different example is a station that uses port-based network access control (IEEE Std 802.1X) to provide both a Controlled Port and an Uncontrolled Port, i.e., two distinct MSAPs with potentially different connectivity, for transmission and reception to and from a single LAN. Similarly, different destination addresses can be associated with different sets of potential recipients. Table 7-1 identifies group MAC addresses that can be used for LLDPDU transmission, and 7.1 describes the different transmission scopes associated with each address. LLDP can also be used in conjunction with individual MAC addresses, and with other group MAC addresses. Distinct LLDP agents, and hence separate and distinct protocol state machines, local and remote MIB tables, and MSAPs are maintained for each LLDPDU destination address, even if the use of two or more MSAPs can result in transmission and reception on the same LAN.

Documents
Document Sharing Hub

Copyright © 2009 IEEE. All rights reserved.
Authorized licensed use limited to: Tsinghua University. Downloaded on February 26,2026 at 07:47:52 UTC from IEEE Xplore. Restrictions apply.

Full document details: ISO/IEC/IEEE 8802-1AB-2014

NOTE—For a given MAC address that is used as a destination address in received LLDPDUs, there is the possibility for a station to receive LLDPDUs from multiple senders. All LLDPDUs that carry that destination MAC address are received by a single LLDP agent, via a single MSAP; however, as the LLPDU carries information that identifies the source of the LLDPDU, information carried in LLPDUs from different senders is able to be recorded independently in the remote systems MIB.

Figure 6-3 illustrates the use of LLDP in a MAC Bridge, with an LLDP agent for each of the two ports shown. Figure 6-4 shows the use of LLDP in an end system with port-based network access control (IEEE Std 802.1X) supported by MACsec (IEEE Std 802.1AE); an LLDP agent is supported by the Controlled Port and an additional LLDP agent may be supported by the Uncontrolled Port. Figure 6-5 shows LLDP in a MAC Bridge that uses port-based network access control on both ports.

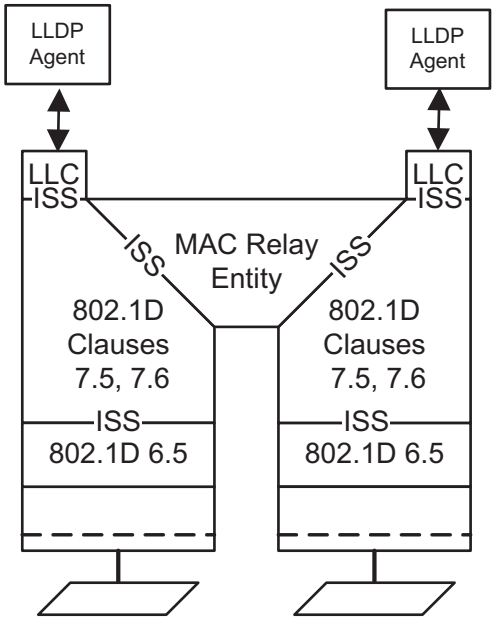

Figure 6-3—LLDP in a MAC Bridge

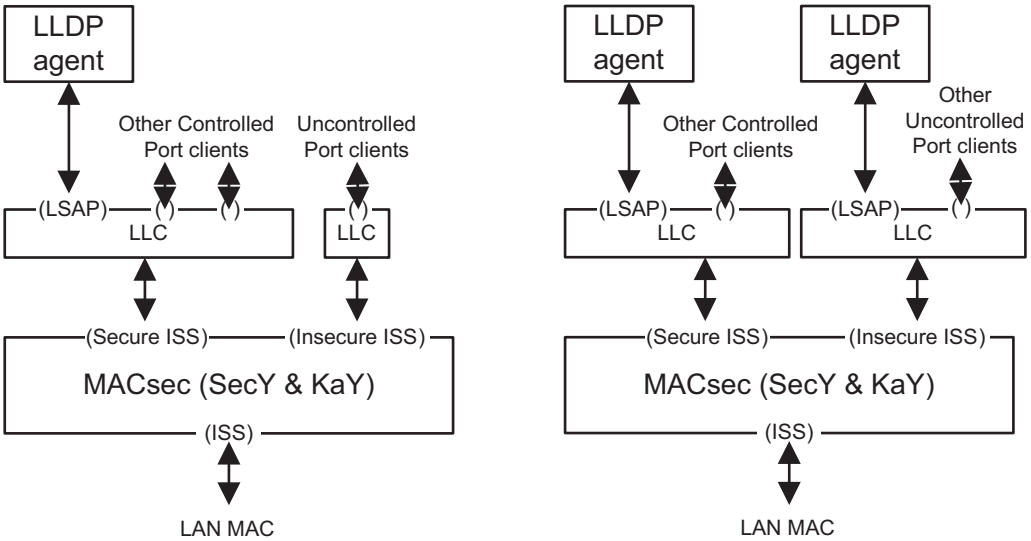

Figure 6-4—LLDP in an end system with port-based network access control

Copyright © 2009 IEEE. All rights reserved.
Authorized licensed use limited to: Tsinghua University. Downloaded on February 26,2026 at 07:47:52 UTC from IEEE Xplore. Restrictions apply.
Documents
Document Sharing Hub
Full document details: ISO/IEC/IEEE 8802-1AB-2014

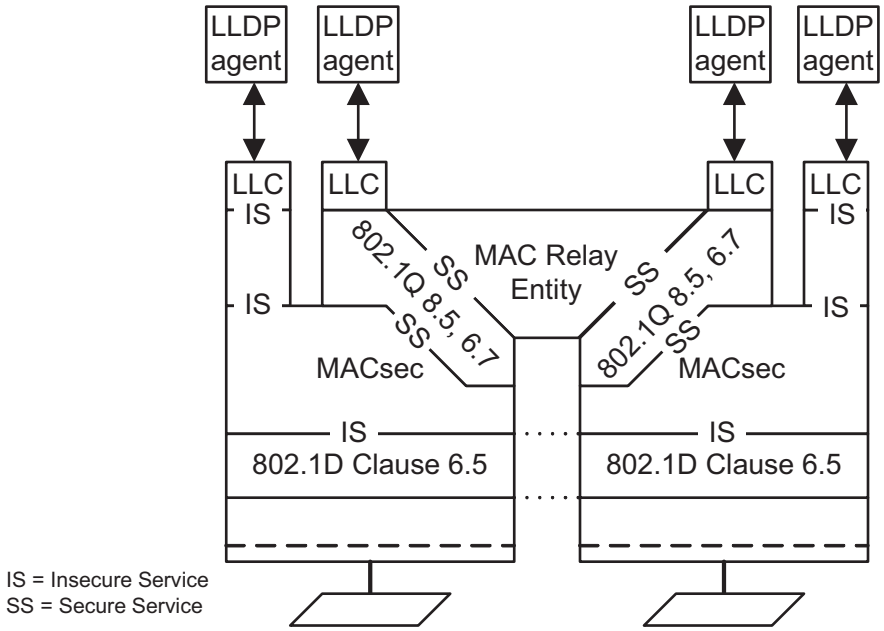

Figure 6-5—LLDP in a MAC Bridge that uses port-based network access control on both ports

LLDP frames sent on an unprotected link may be modified by an attacker. If an implementation is going to take action based upon a received LLDP attribute, it is advisable to take into account whether the message was received on a protected link, and allow for the system to be configured such that only information received in protected messages is acted upon.

The group addresses identified in Table 7-1 are taken from the set specified as reserved addresses by bridging standards. Frames (including those conveying LLDPDUs) that use these destination addresses are filtered or not by the various types of bridge components, as specified by Table 8-1 through Table 8-3 of IEEE Std 802.1Q-2005. The choice of a particular address thus allows a given agent to limit the propagation of LLDPDUs to an individual LAN, or to allow them a wider scope. Figure 6-6 illustrates the various scopes achievable with the three destination group MAC addresses identified in Table 7-1, their use is specified further in 7.1.

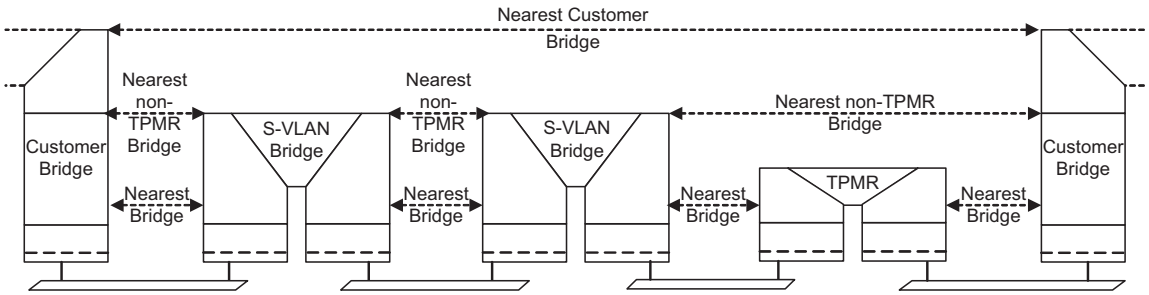

Figure 6-6—Scope of group MAC addresses

More than one LLDP agent, each using a different address scope, can be instantiated for a given system port by adding a simple shim that provides the necessary distinct MSAPs by multiplexing and demultiplexing between those MSAPs and a common MSAP for the port, as illustrated in Figure 6-7.

Documents
Document Sharing Hub

Copyright © 2009 IEEE. All rights reserved.
Authorized licensed use limited to: Tsinghua University. Downloaded on February 26,2026 at 07:47:52 UTC from IEEE Xplore. Restrictions apply.

Full document details: ISO/IEC/IEEE 8802-1AB-2014

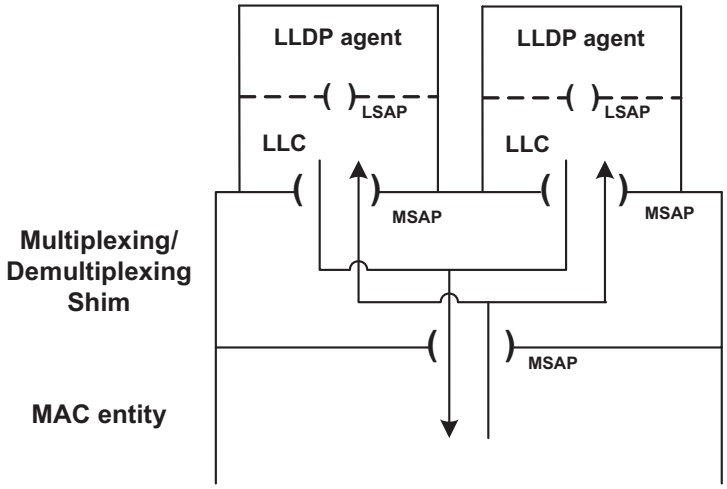

Figure 6-7—Multiplexing and demultiplexing using shims

Copyright © 2009 IEEE. All rights reserved.
Authorized licensed use limited to: Tsinghua University. Downloaded on February 26,2026 at 07:47:52 UTC from IEEE Xplore. Restrictions apply.
Full document details: ISO/IEC/IEEE 8802-1AB-2014

7. LLDPDU transmission, reception, and addressing

This standard is intended to be compatible with all IEEE 802 MACs.

LLDP uses the service provided by the LLDP/LSAP and LLC to transmit and receive LLDPDUs. Each LLDPDU is transmitted as a single MAC service request by an LLC entity that uses a single instance of the MAC Service provided at an MSAP. Each incoming LLDP frame is received at the MSAP by the LLC entity as a MAC service indication.

NOTE—For the purposes of this standard, the terms "LLC" and "LLC entity" include the service provided by the operation of entities that support protocol discrimination using an Ethertype, i.e., protocol discrimination based on the Ethertype field specified in IEEE Std 802a.

The parameters of each service request and service indication comprise

a) Destination address
b) Source address
c) Ethertype
d) LLDPDU

The LLDP Ethertype, used to identify the LLDP protocol, is prepended to the LLDPDU as shown in Figure 7-1 to form the MSDU of the corresponding MAC service request.

Figure 7-1—MSDU format

The values of the parameters used by LLDP, and their encoding by the LLC entity that supports the LLDP LSAP, are specified in the following subclauses.

7.1 Destination address

A set of standard group MAC addresses that can be used by LLDP is specified in Table 7-1. These addresses are in the range of IEEE Std 802.1D reserved addresses (see Table 7-10 in IEEE Std 802.1D-2004), the C-VLAN component reserved addresses (see Table 8-1 in IEEE Std 802.1Q-2005) and the S-VLAN component reserved addresses (see Table 8-2 in IEEE Std 802.1Q-2005). The choice of address used determines the scope of propagation of LLDPDUs within a bridged LAN, as follows:

a) The ***nearest bridge*** group MAC address is an address that no conformant Two-Port MAC Relay (TPMR) component, S-VLAN component, C-VLAN component, or IEEE 802.1D Bridge can forward. LLDPDUs transmitted using this destination address can therefore travel no further than those stations that can be reached via a single individual LAN from the originating station. LLDPDUs received on this address therefore represent information about stations that are attached to the same individual LAN segment as the recipient station.

NOTE 1—This address was selected in order to make it possible to transmit an LLDP frame containing information specific to a single individual LAN, and for that information not to be propagated further than the extent of that individual LAN, to avoid the meaning of that information being misinterpreted. For example, a TLV containing the auto-negotiation status of an IEEE 802.3 LAN would be open to misinterpretation if it were to be propagated via a Bridge onto a second IEEE 802.3 LAN, and would be meaningless if propagated onto a LAN based on a different MAC

Documents Document Sharing Hub

Copyright © 2009 IEEE. All rights reserved.

Authorized licensed use limited to: Tsinghua University. Downloaded on February 26,2026 at 07:47:52 UTC from IEEE Xplore. Restrictions apply.

Full document details: ISO/IEC/IEEE 8802-1AB-2014

technology. This is the "LLDP_Multicast address" that was used in IEEE Std 802.1AB-2005. This address was erroneously omitted from the table of S-VLAN component Reserved addresses added to IEEE Std 802.1Q by IEEE Std 802.1ad-2005, but has been added to that table by IEEE P802.1aj/D 4.0/July 16, 2009 [B2].[10]

b) The ***nearest non-TPMR bridge*** group MAC address is an address that no conformant C-VLAN component, S-VLAN component, or IEEE 802.1D Bridge can forward. However, this address is relayed by TPMR components. Therefore, LLDPDUs received on this address represent information about stations that are not separated from the recipient station by any intervening C-VLAN component, S-VLAN component, or IEEE 802.1D Bridge. There may, however, be one or more TPMR components in the path between the originating and receiving stations.

NOTE 2—This address was selected in order to make it possible to communicate information between adjacent bridges and for that communication to be transparent to the presence or absence of TPMRs in the transmission path. This address is primarily intended for use within provider bridged networks.

c) The ***nearest Customer Bridge*** group MAC address is an address that no conformant C-VLAN component or IEEE 802.1D Bridge forwards. However, this address is relayed by TPMR components and S-VLAN components. Therefore, LLDPDUs received on this address represent information about stations that are not separated from the recipient station by any intervening C-VLAN components (e.g., a C-VLAN Bridge or Provider Edge Bridge). There may, however, be TPMR components and/or S-VLAN components in the path between the originating and receiving stations.

NOTE 3—This address was selected in order to make it possible to communicate information between adjacent Customer Bridges and for that communication to be transparent to the presence or absence of TPMRs or S-VLAN components in the communication path. The scope of this address is the same as that of a customer-to-customer MACSec connection.

Table 7-1—Group MAC addresses used by LLDP

Name	Value	Purpose
Nearest bridge	01-80-C2-00-00-0E	Propagation constrained to a single physical link; stopped by all types of bridge
Nearest non-TPMR bridge	01-80-C2-00-00-03	Propagation constrained by all bridges other than TPMRs; intended for use within provider bridged networks
Nearest Customer Bridge	01-80-C2-00-00-00	Propagation constrained by customer bridges; this gives the same coverage as a customer-customer MACSec connection

NOTE 4—The LSAP or Ethertype field is necessary to distinguish between different protocols conveyed in frames with the same group or individual destination address. Prior to revision of this standard to allow multiple address scopes, the destination address 01-80-C2-00-00-00 was only explicitly specified for Spanning Tree Protocol BPDUs. It is therefore possible that some implementations recognize only a frame's destination address before applying priority handling resources intended to guard against BPDU loss. Since LLDP rate limits LLDPDU transmission, the additional consumption of these resources by LLDPDUs is unlikely to pose a problem for robust implementations.

[10]Numbers preceded by P are IEEE authorized standards projects that were not approved by the IEEE-SA Standards Board at the time this publication went to press. For information about obtaining drafts, contact the IEEE.

Copyright © 2009 IEEE. All rights reserved.
Authorized licensed use limited to: Tsinghua University. Downloaded on February 26,2026 at 07:47:52 UTC from IEEE Xplore. Restrictions apply.
Documents
Document Sharing Hub
Full document details: ISO/IEC/IEEE 8802-1AB-2014

It is assumed in the foregoing definitions of the scope of these group MAC addresses that an end station attached to an individual LAN is a potential recipient of any of these addresses, and therefore such end stations fall within the scope of these addresses as well as the identified bridge components.

In addition to determining the scope of transmission, the support of more than one destination MAC address allows different sets of TLVs to be supported over the different transmission scopes.

In addition to the prescribed support for standard group MAC addresses shown in Table 7-1, implementations of LLDP may support the following destination addresses for LLDPDUs:

d) Any group MAC address.
e) Any individual MAC address.

Support for the use of each of these destination addresses, for both transmission and reception of LLDPDUs, is either mandatory, recommended, permitted, or not permitted, according to the type of system in which LLDP is implemented, as shown in Table 7-2.

Table 7-2—Support for MAC addresses in different systems

Address	C-VLAN Bridge	S-VLAN Bridge	TPMR Bridge	End station
Nearest bridge	Mandatory	Mandatory	Mandatory	Mandatory
Nearest non-TPMR bridge	Mandatory	Mandatory	Not permitted	Recommended
Nearest Customer Bridge	Mandatory	Not permitted	Not permitted	Recommended
Any other group MAC address	Permitted	Permitted	Permitted	Permitted
Any individual MAC address	Permitted	Permitted	Permitted	Permitted

NOTE 5 —Where the implementation supports the use of individual MAC addresses, there is a need for some means whereby the sender can ascertain what address to use, and what scope is associated with that address; how this is achieved is outside the scope of this standard.

NOTE 6—The option of using an individual MAC addresses supports the use of LLDP in IEEE Std 802.11 and other wireless LANs, where it is desirable to target specific TLV content at specific logical Ports. In particular, the use of an individual MAC address allows an access point to direct LLDP frames at an individual station with which it is associated.

NOTE 7—If an individual MAC address is used as the destination address by a given LLDP Agent, then that agent would not also receive LLDPDUs on that address; it makes no sense for an LLDP Agent to send LLDP frames to an individual MAC address that it also receives LLDP frames on. Similarly, if an Agent is able to receive LLDPDUs sent to a given individual MAC address, it would not also transmit LLDPDUs to that address. Therefore, Agents associated with individual MAC addresses are either transmitters or receivers of LLDPDUs for a given address, but not both.

NOTE 8—The destination MAC address used by a given LLDP agent defines only the scope of transmission and the intended recipient(s) of the LLDPDUs; it plays no part in protocol identification. In particular, the group MAC addresses identified in Table 7-1 are not used exclusively by LLDP; other protocols that require to use a similar transmission scope are free to use the same addresses.

7.2 Source address

The source address shall be the individual MAC address of the sending station or port.

Documents
Document Sharing Hub

Copyright © 2009 IEEE. All rights reserved.
Authorized licensed use limited to: Tsinghua University. Downloaded on February 26,2026 at 07:47:52 UTC from IEEE Xplore. Restrictions apply.

Full document details: ISO/IEC/IEEE 8802-1AB-2014

7.3 Ethertype use and encoding

The Ethertype used to identify the LLDP protocol shall be the LLDP Ethertype specified in Table 7-3.

Table 7-3—LLDP Ethertype

Name	Value
LLDP Ethertype	88-CC

Where the LLC entity uses an MSAP that is supported by a specific media access control method (for example, IEEE Std 802.3) or a media access control independent entity (for example, IEEE Std 802.1AE) that directly supports encoding of Ethertypes, the LLC entity shall encode the LLDP Ethertype as the two octet LLDPDU header in the MSDU of the corresponding MAC service request.

Where the LLC entity uses an MSAP that is supported by a specific media access control method that does not directly support Ethertype encoding (for example IEEE Std 802.5™ [B3] or IEEE Std 802.11™ [B4]), the LLDP Ethertype shall be encoded in the octets of LLDPDU header according to the procedures specified in IEEE Std 802 for Subnetwork Access Protocols (SNAP).

NOTE 1—IEEE Std 802.11 does not natively support Ethertypes, as was erroneously stated in the 2005 publication of this standard. IEEE Std 802.11 is defined in terms of the use of IEEE Std 802.2 LLC as the native method of addressing for LLC; therefore, Ethertypes are supported only via SNAP encapsulation.

NOTE 2—The SNAP discriminator comprises the octets AA-AA-03-00-00-00 prepended to the LLDP Ethertype.

NOTE 3—Annex provides example LLDP transmission frame formats for both direct-encoded and SNAP-encoded LLDP Ethertype encoding methods.

7.4 LLDPDU reception

The LLDPDU shall be delivered to the LLDP receive module if, and only if

a) The destination MAC address is equal to the MAC address associated with the corresponding LLDP Agent; and

NOTE—The destination MAC address can be one of the addresses in Table 7-1, or any other valid MAC address—see 7.1.

b) The Ethertype is equal to the value shown in Table 7-3.

Copyright © 2009 IEEE. All rights reserved.
Authorized licensed use limited to: Tsinghua University. Downloaded on February 26,2026 at 07:47:52 UTC from IEEE Xplore. Restrictions apply.
Documents
Document Sharing Hub
Full document details: ISO/IEC/IEEE 8802-1AB-2014

8. LLDPDU and TLV formats

8.1 LLDPDU bit and octet ordering conventions

All LLDPDUs shall contain an integral number of octets. The octets in an LLDPDU are numbered starting from 1 and increasing in the order they are put into the LLDPDU. The bits in an octet are numbered from 1 to 8, where bit 1 is the low-order bit.

When consecutive bits within an octet are used to represent a binary number, the highest bit number has the most significant value. When consecutive octets are used to represent a binary number, the lower octet number has the most significant value. All TLVs respect these bit and octet ordering conventions.

When the encoding of a field or a number of fields is represented using a diagram

a) Octets are shown with the lowest numbered octet nearest the left of the page, the octet numbering increasing from left to right.
b) Within an octet, bits are shown with bit 8 to the left and bit 1 to the right.

8.2 LLDPDU format

The LLDPDU shall contain the following ordered sequence of three mandatory TLVs followed by zero or more optional TLVs plus an End Of LLDPDU TLV, as shown in Figure 8-1:

a) Three mandatory TLVs shall be included at the beginning of each LLDPDU and shall be in the order shown.
   1) Chassis ID TLV
   2) Port ID TLV
   3) Time To Live TLV
b) Optional TLVs as selected by network management (may be inserted in any order).

NOTE 1—"Optional" in the sense that they are not required for LLDP operation; however, their presence could be required by other system elements that use LLDP.

c) The End Of LLDPDU TLV shall be the last TLV in the LLDPDU.

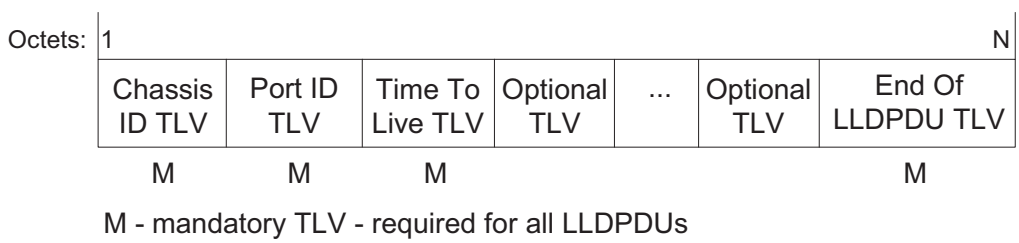

Figure 8-1—LLDPDU format

The maximum length of the LLDPDU shall be the maximum information field length allowed by the particular transmission rate and protocol. In IEEE 802.3 MACs, for example, the maximum LLDPDU length is the maximum data field length for the basic, untagged MAC frame (1500 octets).

NOTE 2—There is no defined minimum length of an LLDPDU, other than that implied by the requirement that conformant implementations support the mandatory TLVs specified in Table 8-1.

Documents
Document Sharing Hub

Copyright © 2009 IEEE. All rights reserved.

Authorized licensed use limited to: Tsinghua University. Downloaded on February 26,2026 at 07:47:52 UTC from IEEE Xplore. Restrictions apply.

Full document details: ISO/IEC/IEEE 8802-1AB-2014

8.3 TLV categories

The TLVs are grouped into two general categories as follows:

a) A set of TLVs that are considered to be basic to the management of network stations and that are a required capability of all LLDP implementations. Each TLV in this category is identified by a unique TLV type value that indicates the particular kind of information contained in the TLV.
b) Organizationally specific extension sets of TLVs that are defined by standards groups such as IEEE 802.1 and IEEE 802.3 and others to enhance management of network stations that are operating with particular media and/or protocols.
    1) TLVs in this category are identified by a common TLV type value that indicates the TLV as belonging to the set of Organizationally Specific TLVs.
    2) Each organization is identified by its organizationally unique identifier (OUI).
    3) Organizationally Specific TLV subtype values indicate the kind of information contained in the TLV.

The basic TLV format and general field definition rules are defined in 8.4. Specific definitions and usage requirements for all basic management set TLVs are defined in 8.5. Usage rules/requirements that pertain to each individual basic TLV are contained in the definition for that particular TLV.

The basic format and the field definition/general usage rules/restrictions for Organizationally Specific TLVs are defined in 8.6. Specific definitions for IEEE 802.1 and IEEE 802.3 extension sets are contained in Annex and Annex .

Usage rules/requirements that pertain to each individual basic TLV are contained in the definition for that particular TLV.

8.4 Basic TLV format

Figure 8-2 shows the basic TLV format.

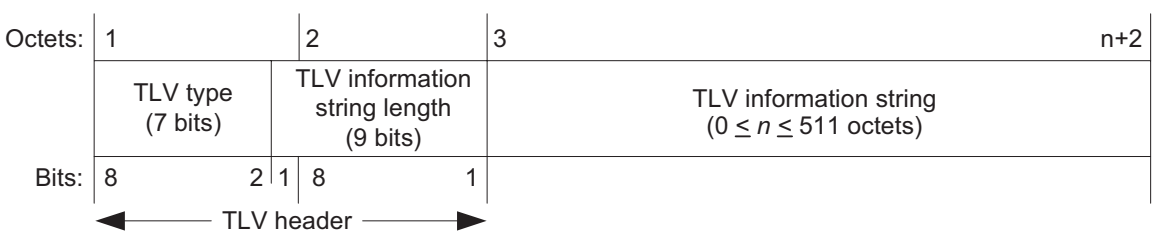

Figure 8-2—Basic TLV format

The TLV type field occupies the seven most significant bits of the first octet of the TLV format. The least significant bit in the first octet of the TLV format is the most significant bit of the TLV information string length field.

8.4.1 TLV type

The TLV type field is seven bits long and identifies the specific TLV. Two classes of TLVs are defined:

a) Mandatory TLVs that shall be included in all LLDPDUs.
b) Optional TLVs that may be included in LLDPDUs.

Copyright © 2009 IEEE. All rights reserved.
Authorized licensed use limited to: Tsinghua University. Downloaded on February 26,2026 at 07:47:52 UTC from IEEE Xplore. Restrictions apply.
Documents
Document Sharing Hub
Full document details: ISO/IEC/IEEE 8802-1AB-2014

Table 8-1 lists the currently defined TLVs, their identifying TLV type values, and whether they are mandatory or optional for inclusion in any particular LLDPDU.

Table 8-1—TLV type values

TLV type [a]	TLV name	Usage in LLDPDU	Reference
0	End Of LLDPDU	Mandatory	8.5.1
1	Chassis ID	Mandatory	8.5.2
2	Port ID	Mandatory	8.5.3
3	Time To Live	Mandatory	8.5.4
4	Port Description	Optional	8.5.5
5	System Name	Optional	8.5.6
6	System Description	Optional	8.5.7
7	System Capabilities	Optional	8.5.8
8	Management Address	Optional	8.5.9
9–126	Reserved for future standardization	—	—
127	Organizationally Specific TLVs	Optional	Annex Annex

[a]TLVs with type values 0–8 are members of the basic management set.

8.4.2 TLV information string length

The TLV information string length field shall contain the length of the information string, in octets.

8.4.3 TLV information string

The information string

a) May be fixed or variable length.
b) May include one or more information fields with associated subtype identifiers and field length designators as in, for example, the Management Address TLV (see 8.5.9).
c) May contain either binary or alpha-numeric information that is instance specific for the particular TLV type and/or subtype.
   1) Bit 1 in binary bit maps shall be the least significant bit in the field.
   2) The first octet of an alpha-numeric field shall be the most significant octet.
   3) Alpha-numeric information shall be encoded in UTF-8 [IETF RFC 3629].

Documents Document Sharing Hub

Copyright © 2009 IEEE. All rights reserved.

Authorized licensed use limited to: Tsinghua University. Downloaded on February 26,2026 at 07:47:52 UTC from IEEE Xplore. Restrictions apply.

Full document details: ISO/IEC/IEEE 8802-1AB-2014

8.5 Basic management TLV set formats and definitions

8.5.1 End Of LLDPDU TLV

The End Of LLDPDU TLV is a 2-octet, all-zero TLV that is used to mark the end of the TLV sequence in LLDPDUs. The format for this TLV is shown in Figure 8-3.

Octets:	1	2
	TLV type = 0	TLV information string length = 0
Bits:	8 2 1	8 1

Figure 8-3—End Of LLDPDU TLV format

NOTE—Some IEEE 802 MACs require the data field in a frame to contain a minimum number of octets. For example, the IEEE 802.3 MAC adds pad octets to complete a minimum length data field if the user's data is less than the minimum required length. Since pad octets are unspecified, an End Of LLDPDU TLV is necessary to prevent non-zero pad octets from being interpreted by the receiving LLDP agent as another TLV.

8.5.2 Chassis ID TLV

The Chassis ID TLV is a mandatory TLV that identifies the chassis containing the IEEE 802 LAN station associated with the transmitting LLDP agent. There are several ways in which a chassis may be identified and a chassis ID subtype is used to indicate the type of component being referenced by the chassis ID field. Each LLDPDU shall contain one, and only one, Chassis ID TLV and the chassis ID field value shall remain constant for all LLDPDUs while the MAC status parameter for the Port remains operational.

The Chassis ID TLV shall be the first TLV in the LLDPDU. Its format is shown in Figure 8-4.

Octets:	1	2	3	4 … n+3
	TLV type = 1 (7 bits)	TLV information string length (9 bits)	chassis ID subtype (8 bits)	chassis ID ($1 \leq n \leq 255$ octets)
Bits:	8 2 1	8 1	8 1	
	← TLV header →		← TLV information string →	

Figure 8-4—Chassis ID TLV format

8.5.2.1 TLV information string length

The TLV information string length field shall indicate the exact length, in octets, of the (chassis ID subtype + chassis ID) fields.

8.5.2.2 chassis ID subtype

The chassis ID subtype field shall contain an integer value indicating the basis for the chassis ID entity that is listed in the chassis ID field. The defined chassis ID subtypes and their preferred use order are listed in Table 8-2.

Copyright © 2009 IEEE. All rights reserved.
Authorized licensed use limited to: Tsinghua University. Downloaded on February 26,2026 at 07:47:52 UTC from IEEE Xplore. Restrictions apply.
Documents
Document Sharing Hub
Full document details: ISO/IEC/IEEE 8802-1AB-2014

Table 8-2—chassis ID subtype enumeration

ID subtype	ID basis	Reference
0	Reserved	—
1	Chassis component	EntPhysicalAlias when entPhysClass has a value of 'chassis(3)' (IETF RFC 4133)
2	Interface alias	IfAlias (IETF RFC 2863)
3	Port component	EntPhysicalAlias when entPhysicalClass has a value 'port(10)' or 'backplane(4)' (IETF RFC 4133)
4	MAC address	MAC address (IEEE Std 802)
5	Network address	networkAddress [a]
6	Interface name	ifName (IETF RFC 2863)
7	Locally assigned	local[b]
8–255	Reserved	—

[a]networkAddress is an octet string that identifies a particular network address family and an associated network address that are encoded in network octet order. An IP address, for example, would be encoded with the first octet containing the IANA Address Family Numbers enumeration value for the specific address type and octets 2 through *n* containing the address value (for example, the encoding for C0-00-02-0A would indicate the IPv4 address 192.0.2.10).

[b]local is an alpha-numeric string and is locally assigned.

8.5.2.3 chassis ID

The chassis ID field shall contain an octet string indicating the specific identifier for the particular chassis in this system. Because chassis ID and port ID values are concatenated to form the local MSAP identifier, the value chosen from Table 8-2 for the chassis ID shall be non-null.

8.5.2.4 Chassis ID TLV usage rules

An LLDPDU shall contain exactly one Chassis ID TLV.

8.5.3 Port ID TLV

The Port ID TLV is a mandatory TLV that identifies the port component of the MSAP identifier associated with the transmitting LLDP agent. As with the chassis, there are several ways in which a port may be identified. A port ID subtype is used to indicate how the port is being referenced in the port ID field. Each LLDPDU shall contain one, and only one, Port ID TLV. The port ID value shall remain constant for all LLDPDUs while the transmitting port remains operational.

The chosen port shall be identified in an unambiguous manner (for example, backplane number, management entity, MAC address, etc.).

The Port ID TLV shall be the second TLV in the LLDPDU. Its format is shown in Figure 8-5.

Copyright © 2009 IEEE. All rights reserved.

Authorized licensed use limited to: Tsinghua University. Downloaded on February 26,2026 at 07:47:52 UTC from IEEE Xplore. Restrictions apply.

Documents Document Sharing Hub

Full document details: ISO/IEC/IEEE 8802-1AB-2014

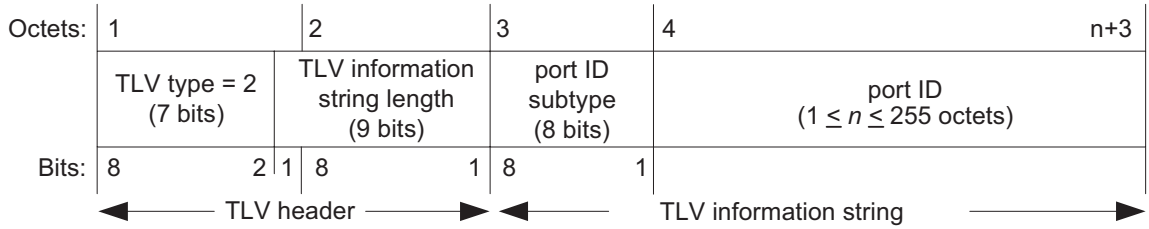

Figure 8-5—Port ID TLV format

8.5.3.1 TLV information string length

The TLV information string length field shall indicate the length, in octets, of the (port ID subtype + port ID) fields.

8.5.3.2 port ID subtype

The port ID subtype field shall contain an integer value indicating the basis for the identifier that is listed in the port ID field. The defined port ID subtypes and their preferred use order are listed in Table 8-3.

Table 8-3—port ID subtype enumeration

ID subtype	ID basis	References
0	Reserved	—
1	Interface alias	ifAlias (IETF RFC 2863)
2	Port component	entPhysicalAlias when entPhysicalClass has a value ‘port(10)’ or ‘backplane(4)’ (IETF RFC 4133)
3	MAC address	MAC address (IEEE Std 802)
4	Network address	networkAddress [a]
5	Interface name	ifName (IETF RFC 2863)
6	Agent circuit ID	agent circuit ID (IETF RFC 3046)
7	Locally assigned	local [b]
8–255	Reserved	—

[a]networkAddress is an octet string that identifies a particular network address family and an associated network address that are encoded in network octet order. An IP address, for example, would be encoded with the first octet containing the IANA Address Family Numbers enumeration value for the specific address type and octets 2 through *n* containing the address value (for example, the encoding for C0-00-02-0A would indicate the IP version 4 address 192.0.2.10).

[b]local is an alpha-numeric string and is locally assigned.

8.5.3.3 port ID

The port ID field is an alpha-numeric string that contains the specific identifier for the port from which this LLDPDU was transmitted. Because chassis ID and port ID values are concatenated to form the local MSAP identifier, the value chosen from Table 8-3 for the port ID shall be non-null.

NOTE—The port ID can contain alphanumeric data or binary data, depending upon the value of the port ID subtype.

Copyright © 2009 IEEE. All rights reserved.
Authorized licensed use limited to: Tsinghua University. Downloaded on February 26,2026 at 07:47:52 UTC from IEEE Xplore. Restrictions apply.
Documents
Document Sharing Hub
Full document details: ISO/IEC/IEEE 8802-1AB-2014

8.5.3.4 Port ID TLV usage rules

An LLDPDU shall contain exactly one Port ID TLV.

8.5.4 Time To Live TLV

The Time To Live TLV indicates the number of seconds that the recipient LLDP agent is to regard the information associated with this MSAP identifier to be valid.

a) When the TTL field is non-zero the receiving LLDP agent is notified to completely replace all information associated with this MSAP identifier with the information in the received LLDPDU.

b) When the TTL field is set to zero, the receiving LLDP agent is notified to delete all system information associated with the LLDP agent/port. This TLV may be used, for example, to signal that the sending port has initiated a port shutdown procedure.

The Time To Live TLV is mandatory and shall be the third TLV in the LLDPDU. Its format is shown in Figure 8-6.

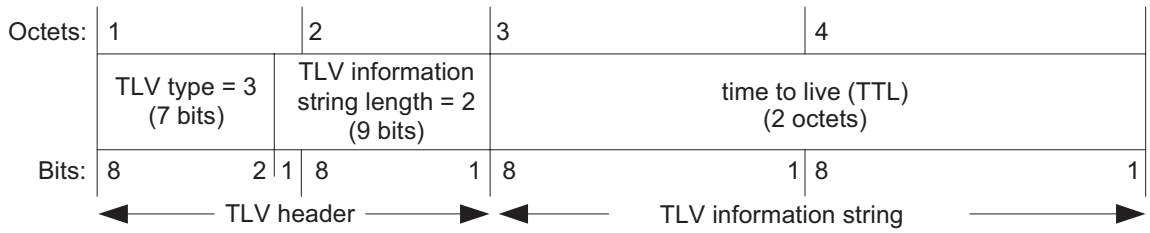

Figure 8-6—Time To Live TLV format

8.5.4.1 time to live (TTL)

The TTL field shall contain an integer value in the range $0 \geq t \geq 65535$ seconds and is set to the computed value of txTTL at the time the LLDPDU is constructed (see 9.2.5.22).

8.5.4.2 Time To Live TLV usage rules

An LLDPDU shall contain exactly one Time To Live TLV.

8.5.5 Port Description TLV

The Port Description TLV allows network management to advertise the IEEE 802 LAN station's port description. The format for this TLV is shown in Figure 8-7.

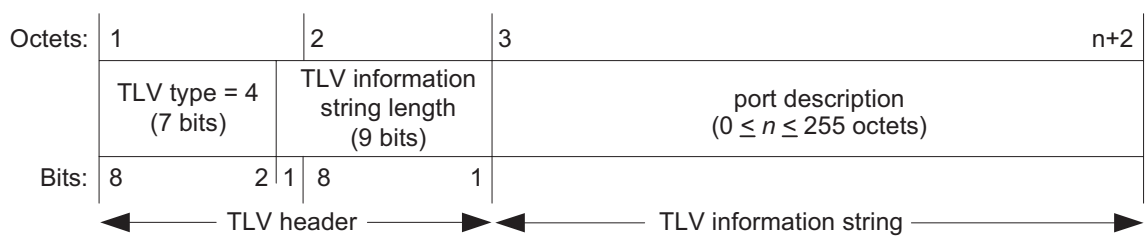

Figure 8-7—Port Description TLV format

Documents
Document Sharing Hub

Copyright © 2009 IEEE. All rights reserved.
Authorized licensed use limited to: Tsinghua University. Downloaded on February 26,2026 at 07:47:52 UTC from IEEE Xplore. Restrictions apply.

Full document details: ISO/IEC/IEEE 8802-1AB-2014

8.5.5.1 TLV information string length

The TLV information string length field shall contain the exact length, in octets, of the port description field.

8.5.5.2 port description

The port description field shall contain an alpha-numeric string that indicates the port's description. If RFC 2863 is implemented, the ifDescr object should be used for this field.

8.5.5.3 Port Description TLV usage rules

An LLDPDU should not contain more than one Port Description TLV.

8.5.6 System Name TLV

The System Name TLV allows network management to advertise the system's assigned name. The format for this TLV is shown in Figure 8-8.

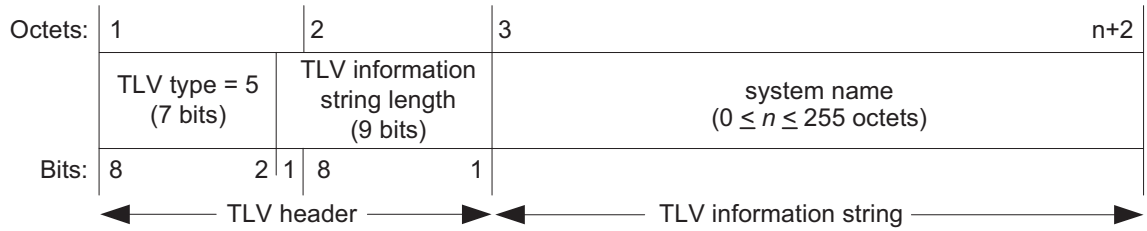

Figure 8-8—System Name TLV format

8.5.6.1 TLV information string length

The TLV information string length field shall contain the exact length, in octets, of the system name.

8.5.6.2 system name

The system name field shall contain an alpha-numeric string that indicates the system's administratively assigned name. The system name should be the system's fully qualified domain name. If implementations support IETF RFC 3418, the sysName object should be used for this field.

8.5.6.3 System Name TLV usage rules

An LLDPDU shall not contain more than one System Name TLV.

Copyright © 2009 IEEE. All rights reserved.
Authorized licensed use limited to: Tsinghua University. Downloaded on February 26,2026 at 07:47:52 UTC from IEEE Xplore. Restrictions apply.
Documents
Document Sharing Hub
Full document details: ISO/IEC/IEEE 8802-1AB-2014

8.5.7 System Description TLV

The System Description TLV allows network management to advertise the system's description. The format for this TLV is shown in Figure 8-9.

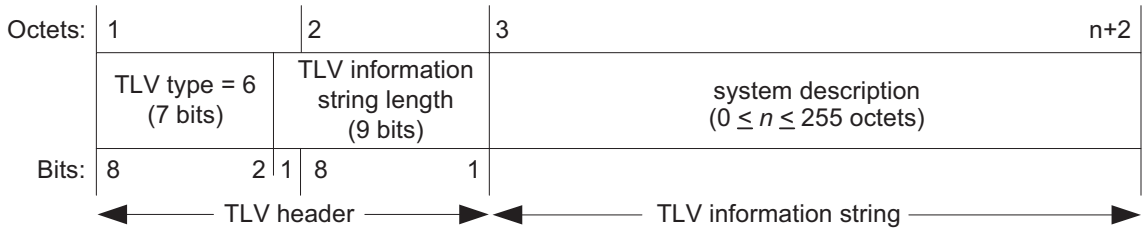

Figure 8-9—System Description TLV format

8.5.7.1 TLV information string length

The TLV information string length field shall indicate the exact length, in octets, of the system description.

8.5.7.2 system description

The system description field shall contain an alpha-numeric string that is the textual description of the network entity. The system description should include the full name and version identification of the system's hardware type, software operating system, and networking software. If implementations support IETF RFC 3418, the sysDescr object should be used for this field.

8.5.7.3 System Description TLV usage rules

An LLDPDU shall not contain more than one System Description TLV.

8.5.8 System Capabilities TLV

The System Capabilities TLV is an optional TLV that identifies the primary function(s) of the system and whether or not these primary functions are enabled. Figure 8-10 shows the format of this TLV.

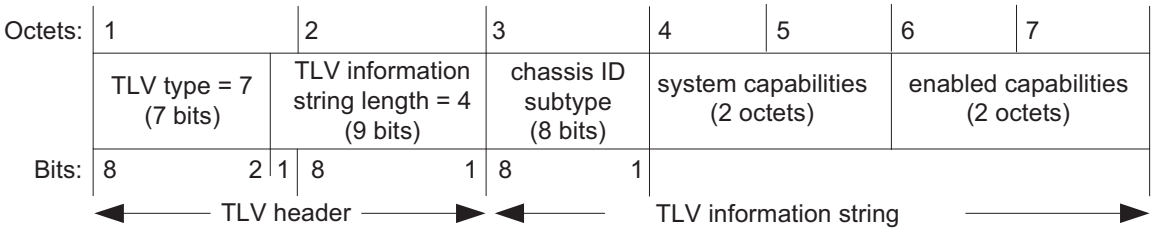

Figure 8-10—System Capabilities TLV format

8.5.8.1 system capabilities

The system capabilities field shall contain a bit-map of the capabilities that define the primary function(s) of the system. The bit positions for each function and the associated MIB or standard that are likely, but not guaranteed, to be supported are listed in Table 8-4. A binary one in the associated bit indicates the existence of that capability. Individual systems may indicate more than one implemented functional capability (for example, both a bridge and router capability).

Documents
Document Sharing Hub

Copyright © 2009 IEEE. All rights reserved.

Authorized licensed use limited to: Tsinghua University. Downloaded on February 26,2026 at 07:47:52 UTC from IEEE Xplore. Restrictions apply.

Full document details: ISO/IEC/IEEE 8802-1AB-2014

Table 8-4—System capabilities

Bit	Capability	Reference
1	Other	—
2	Repeater	IETF RFC 2108
3	MAC Bridge	IEEE Std 802.1D
4	WLAN Access Point	IEEE Std 802.11 MIB
5	Router	IETF RFC 1812
6	Telephone	IETF RFC 4293
7	DOCSIS cable device	IETF RFC 4639 and IETF RFC 4546
8	Station Only [a]	IETF RFC 4293
9	C-VLAN Component of a VLAN Bridge	IEEE Std 802.1Q
10	S-VLAN Component of a VLAN Bridge	IEEE Std 802.1Q
11	Two-port MAC Relay (TPMR)	IEEE Std 802.1Q
12–16	reserved	—

[a]The Station Only capability is intended for devices that implement only an end station capability, and for which none of the other capabilities in the table apply. Bit 8 should therefore not be set in conjunction with any other bits.

8.5.8.2 enabled capabilities

The enabled capabilities field shall contain a bit map of the primary functions listed in Table 8-4. A binary one in a bit position indicates that the function associated with that bit is currently enabled.

8.5.8.3 System Capabilities TLV usage rules

An LLDPDU shall not contain more than one System Capabilities TLV.

If the system capabilities field does not indicate the existence of a capability that the enabled capabilities field indicates is enabled, the TLV is interpreted as containing an error and shall be discarded.

8.5.9 Management Address TLV

The Management Address TLV identifies an address associated with the local LLDP agent that may be used to reach higher layer entities to assist discovery by network management. The TLV also provides room for the inclusion of both the system interface number and an object identifier (OID) that are associated with this management address, if either or both are known. Figure 8-11 shows the Management Address TLV format.

Copyright © 2009 IEEE. All rights reserved.
Authorized licensed use limited to: Tsinghua University. Downloaded on February 26,2026 at 07:47:52 UTC from IEEE Xplore. Restrictions apply.

Documents
Document Sharing Hub

Full document details: ISO/IEC/IEEE 8802-1AB-2014

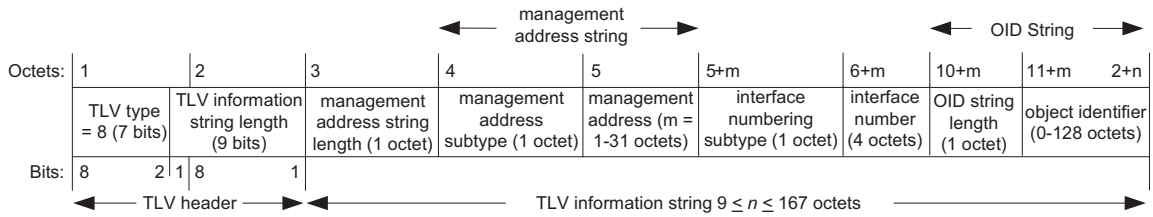

Figure 8-11—Management Address TLV format

8.5.9.1 TLV information string length

The TLV information string length field shall contain the length, in octets, of all the fields in the TLV information string.

8.5.9.2 management address string length

The management address string length field shall contain the length, in octets, of the (management address subtype + management address) fields.

8.5.9.3 management address subtype

The management address subtype field shall contain an integer value indicating the type of address that is listed in the management address field. Enumeration for this field is contained in the ianaAddressFamilyNumbers module of the IETF RFC 3232 on-line database that is accessible through a web page (currently, http://www.iana.org). The management address subtype is contained in the first octet of the management address string.

NOTE—As a consequence of the limitation on the size of the management address field (a maximum of 31 octets), some options for the management address subtype (such as long DNS names) may be impractical.

8.5.9.4 management address

The management address field shall contain an octet string indicating the particular management address associated with this TLV.

a) The returned address should be the most appropriate for management use, typically a layer 3 address such as the IPv4 address, 192.0.2.10 (see also Table 8-2, footnote a).

b) If no management address is available, the return address should be the MAC address for the station or port. The ianaAddressFamilyNumber for a MAC address is all802 (value 6).

8.5.9.5 interface numbering subtype

The interface numbering subtype field shall contain an integer value indicating the numbering method used for defining the interface number. The following three values are currently defined:

1) Unknown
2) ifIndex
3) system port number

Documents
Document Sharing Hub

Copyright © 2009 IEEE. All rights reserved.

Authorized licensed use limited to: Tsinghua University. Downloaded on February 26,2026 at 07:47:52 UTC from IEEE Xplore. Restrictions apply.

Full document details: ISO/IEC/IEEE 8802-1AB-2014

8.5.9.6 interface number

The interface number field shall contain the assigned number within the system that identifies the specific interface associated with this management address. If the value of the interface subtype is unknown, this field shall be set to zero.

8.5.9.7 object identifier (OID) string length

The object identifier string length field shall contain the length, in octets, of the OID. A value of zero in this field indicates that the OID field is not provided.

8.5.9.8 object identifier

The object identifier field contains an OID that identifies the type of hardware component or protocol entity associated with the indicated management address. The OID shall be the value portion of the ASN.1 encoding of the object identifier, encoded according to ASN.1 basic encoding rules [ISO/IEC 8824-1]. If no OID is available, this field shall not be provided.

NOTE—The interface number and OID are included in this TLV to assist NMS discovery by indicating Enterprise Specific or other starting points for the search, such as the Interface or Entity MIB.

8.5.9.9 Management Address TLV usage rules

Management Address TLVs are subject to the following:

a) At least one Management Address TLV should be included in every LLDPDU.
b) Since there are typically a number of different addresses associated with a MSAP identifier, an individual LLDPDU may contain more than one Management Address TLV.
c) When Management Address TLV(s) are included in an LLDPDU, the included address(es) should be the address(es) offering the best management capability.
d) If more than one Management Address TLV is included in an LLDPDU, each management address shall be different from the management address in any other management address TLV in the LLDPDU.
e) If an OID is included in the TLV, it shall be reachable by the management address.
f) If the network system is a VLAN bridge that implements the port and protocol based VLAN classification, every Management Address TLV that reports an address that is accessible on a port and protocol VLAN through the particular port should be accompanied by a port and protocol VLAN TLV that indicates the VLAN identifier (VID) associated with the management address reported by this TLV (see E.3.2).
g) In a properly formed Management Address TLV, the TLV information string length is equal to:
(management address string length) + (OID string length) + 7.

   If the TLV information string length in a received Management Address TLV is incorrect, then it is ignored and processing of that LLDPDU is terminated.

8.6 Organizationally Specific TLVs

This TLV category is provided to allow different organizations, such as IEEE 802.1, IEEE 802.3, IETF, as well as individual software and equipment vendors, to define TLVs that advertise information to remote entities attached to the same media, subject to the following restrictions:

a) Information transmitted in an Organizationally Specific TLV is intended to be a one way advertisement.

Copyright © 2009 IEEE. All rights reserved.
Authorized licensed use limited to: Tsinghua University. Downloaded on February 26,2026 at 07:47:52 UTC from IEEE Xplore. Restrictions apply.
Documents
Document Sharing Hub
Full document details: ISO/IEC/IEEE 8802-1AB-2014