INTERNATIONAL STANDARD

ISO/IEC/IEEE 8802-1BR

First edition
2016-10-15

Information technology — Telecommunications and information exchange between systems — Local and metropolitan area networks — Specific requirements —

Part 1BR: Virtual bridged local area networks — Bridge port extension

Technologies de l'information — Télécommunications et échange d'informations entre systèmes — Réseaux de zones locales et métropolitaines — Exigences spécifiques —

Partie 1BR: Réseaux de zone locale virtuelle pontée — Extension du port de pontage

Reference number
ISO/IEC/IEEE 8802-1BR:2016(E)

© IEEE 2012 – All rights reserved

Authorized licensed use limited to: Tsinghua University. Downloaded on February 26,2026 at 08:07:53 UTC from IEEE Xplore. Restrictions apply.

Full document details: ISO/IEC/IEEE 8802-1BR-2016

COPYRIGHT PROTECTED DOCUMENT

© IEEE 2012

All rights reserved. Unless otherwise specified, no part of this publication may be reproduced or utilized otherwise in any form or by any means, electronic or mechanical, including photocopying, or posting on the internet or an intranet, without prior written permission. Permission can be requested from ISO or IEEE at the respective address below or ISO's member body in the country of the requester.

ISO copyright office
Ch. de Blandonnet 8 • CP 401
CH-1214 Vernier, Geneva, Switzerland
Tel. +41 22 749 01 11
Fax +41 22 749 09 47
copyright@iso.org
www.iso.org

Institute of Electrical and Electronics Engineers, Inc
3 Park Avenue, New York
NY 10016-5997, USA

stds.ipr@ieee.org
www.ieee.org

© IEEE 2012 – All rights reserved
Authorized licensed use limited to: Tsinghua University. Downloaded on February 26,2026 at 08:07:53 UTC from IEEE Xplore. Restrictions apply.
Documents
Document Sharing Hub
Full document details: ISO/IEC/IEEE 8802-1BR-2016

Foreword

ISO (the International Organization for Standardization) and IEC (the International Electrotechnical Commission) form the specialized system for worldwide standardization. National bodies that are members of ISO or IEC participate in the development of International Standards through technical committees established by the respective organization to deal with particular fields of technical activity. ISO and IEC technical committees collaborate in fields of mutual interest. Other international organizations, governmental and non-governmental, in liaison with ISO and IEC, also take part in the work. In the field of information technology, ISO and IEC have established a joint technical committee, ISO/IEC JTC 1.

IEEE Standards documents are developed within the IEEE Societies and the Standards Coordinating Committees of the IEEE Standards Association (IEEE-SA) Standards Board. The IEEE develops its standards through a consensus development process, approved by the American National Standards Institute, which brings together volunteers representing varied viewpoints and interests to achieve the final product. Volunteers are not necessarily members of the Institute and serve without compensation. While the IEEE administers the process and establishes rules to promote fairness in the consensus development process, the IEEE does not independently evaluate, test, or verify the accuracy of any of the information contained in its standards.

International Standards are drafted in accordance with the rules given in the ISO/IEC Directives, Part 2.

The main task of ISO/IEC JTC 1 is to prepare International Standards. Draft International Standards adopted by the joint technical committee are circulated to national bodies for voting. Publication as an International Standard requires approval by at least 75 % of the national bodies casting a vote.

Attention is called to the possibility that implementation of this standard may require the use of subject matter covered by patent rights. By publication of this standard, no position is taken with respect to the existence or validity of any patent rights in connection therewith. ISO/IEEE is not responsible for identifying essential patents or patent claims for which a license may be required, for conducting inquiries into the legal validity or scope of patents or patent claims or determining whether any licensing terms or conditions provided in connection with submission of a Letter of Assurance or a Patent Statement and Licensing Declaration Form, if any, or in any licensing agreements are reasonable or non-discriminatory. Users of this standard are expressly advised that determination of the validity of any patent rights, and the risk of infringement of such rights, is entirely their own responsibility. Further information may be obtained from ISO or the IEEE Standards Association.

ISO/IEC/IEEE 8802-1BR was prepared by Joint Technical Committee ISO/IEC JTC 1, *Information Technology*, Subcommittee SC 6, *Telecommunications and information exchange between systems* in cooperation with the Systems and Software Engineering Standards Committee of the IEEE Computer Society, under the Partner Standards Development Organization cooperation agreement between ISO and IEEE.

© IEEE 2012 – All rights reserved

Authorized licensed use limited to: Tsinghua University. Downloaded on February 26,2026 at 08:07:53 UTC from IEEE Xplore. Restrictions apply.

Full document details: ISO/IEC/IEEE 8802-1BR-2016

Documents
Document Sharing Hub
Authorized licensed use limited to: Tsinghua University. Downloaded on February 26,2026 at 08:07:53 UTC from IEEE Xplore. Restrictions apply.
Full document details: ISO/IEC/IEEE 8802-1BR-2016

IEEE STANDARDS ASSOCIATION

IEEE Standard for
Local and metropolitan area networks—

Virtual Bridged Local Area Networks—Bridge Port Extension

IEEE Computer Society

Sponsored by the
LAN/MAN Standards Committee

IEEE
3 Park Avenue
New York, NY 10016-5997
USA

16 July 2012

IEEE Std 802.1BR™-2012

Documents
Document Sharing Hub

Authorized licensed use limited to: Tsinghua University. Downloaded on February 26,2026 at 08:07:53 UTC from IEEE Xplore. Restrictions apply.

Full document details: ISO/IEC/IEEE 8802-1BR-2016

Documents
Document Sharing Hub
Authorized licensed use limited to: Tsinghua University. Downloaded on February 26,2026 at 08:07:53 UTC from IEEE Xplore. Restrictions apply.
Full document details: ISO/IEC/IEEE 8802-1BR-2016

IEEE Std 802.1BR™-2012

IEEE Standard for Local and metropolitan area networks—

Virtual Bridged Local Area Networks—Bridge Port Extension

Sponsor

LAN/MAN Standards Committee
of the
IEEE Computer Society

Approved 14 May 2012

IEEE-SA Standards Board

Documents
Document Sharing Hub

Authorized licensed use limited to: Tsinghua University. Downloaded on February 26,2026 at 08:07:53 UTC from IEEE Xplore. Restrictions apply.

Full document details: ISO/IEC/IEEE 8802-1BR-2016

Abstract: This standard specifies the operation of Bridge Port Extenders, including management, protocols, and algorithms. Bridge Port Extenders operate in support of the MAC Service by Extended Bridges.

Keywords: Bridged Local Area Networks, Data Center Bridging, DCB, Edge Virtual Bridging, EVB, IEEE 802.1BR, LANs, local area networks, MAC Bridges, MANs, metropolitan area networks, Virtual Bridged Local Area Networks

The Institute of Electrical and Electronics Engineers, Inc.
3 Park Avenue, New York, NY 10016-5997, USA

Copyright © 2012 by The Institute of Electrical and Electronics Engineers, Inc.
All rights reserved. Published 16 July 2012. Printed in the United States of America.

IEEE and 802 are registered trademarks in the U.S. Patent & Trademark Office, owned by The Institute of Electrical and Electronics Engineers, Incorporated.

Print: ISBN 978-0-7381-7281-1 STD97256
PDF: ISBN 978-0-7381-7387-0 STDPD97256

IEEE prohibits discrimination, harassment and bullying. For more information, visit http://www.ieee.org/web/aboutus/whatis/policies/p9-26.html. No part of this publication may be reproduced in any form, in an electronic retrieval system or otherwise, without the prior written permission of the publisher.

Documents
Document Sharing Hub

Authorized licensed use limited to: Tsinghua University. Downloaded on February 26,2026 at 08:07:53 UTC from IEEE Xplore. Restrictions apply.

Full document details: ISO/IEC/IEEE 8802-1BR-2016

Notice and Disclaimer of Liability Concerning the Use of IEEE Documents: IEEE Standards documents are developed within the IEEE Societies and the Standards Coordinating Committees of the IEEE Standards Association (IEEE-SA) Standards Board. IEEE develops its standards through a consensus development process, approved by the American National Standards Institute, which brings together volunteers representing varied viewpoints and interests to achieve the final product. Volunteers are not necessarily members of the Institute and serve without compensation. While IEEE administers the process and establishes rules to promote fairness in the consensus development process, IEEE does not independently evaluate, test, or verify the accuracy of any of the information or the soundness of any judgments contained in its standards.

Use of an IEEE Standard is wholly voluntary. IEEE disclaims liability for any personal injury, property or other damage, of any nature whatsoever, whether special, indirect, consequential, or compensatory, directly or indirectly resulting from the publication, use of, or reliance upon any IEEE Standard document.

IEEE does not warrant or represent the accuracy or content of the material contained in its standards, and expressly disclaims any express or implied warranty, including any implied warranty of merchantability or fitness for a specific purpose, or that the use of the material contained in its standards is free from patent infringement. IEEE Standards documents are supplied "**AS IS**."

The existence of an IEEE Standard does not imply that there are no other ways to produce, test, measure, purchase, market, or provide other goods and services related to the scope of the IEEE standard. Furthermore, the viewpoint expressed at the time a standard is approved and issued is subject to change brought about through developments in the state of the art and comments received from users of the standard. Every IEEE standard is subjected to review at least every ten years. When a document is more than ten years old and has not undergone a revision process, it is reasonable to conclude that its contents, although still of some value, do not wholly reflect the present state of the art. Users are cautioned to check to determine that they have the latest edition of any IEEE standard.

In publishing and making its standards available, IEEE is not suggesting or rendering professional or other services for, or on behalf of, any person or entity. Nor is IEEE undertaking to perform any duty owed by any other person or entity to another. Any person utilizing any IEEE Standards document, should rely upon his or her own independent judgment in the exercise of reasonable care in any given circumstances or, as appropriate, seek the advice of a competent professional in determining the appropriateness of a given IEEE standard.

Translations: The IEEE consensus development process involves the review of documents in English only. In the event that an IEEE standard is translated, only the English version published by IEEE should be considered the approved IEEE standard.

Official Statements: A statement, written or oral, that is not processed in accordance with the IEEE-SA Standards Board Operations Manual shall not be considered the official position of IEEE or any of its committees and shall not be considered to be, nor be relied upon as, a formal position of IEEE. At lectures, symposia, seminars, or educational courses, an individual presenting information on IEEE standards shall make it clear that his or her views should be considered the personal views of that individual rather than the formal position of IEEE.

Comments on Standards: Comments for revision of IEEE Standards documents are welcome from any interested party, regardless of membership affiliation with IEEE. However, IEEE does not provide consulting information or advice pertaining to IEEE Standards documents. Suggestions for changes in documents should be in the form of a proposed change of text, together with appropriate supporting comments. Since IEEE standards represent a consensus of concerned interests, it is important to ensure that any responses to comments and questions also receive the concurrence of a balance of interests. For this reason, IEEE and the members of its societies and Standards Coordinating Committees are not able to provide an instant response to comments or questions except in those cases where the matter has previously been addressed. Any person who would like to participate in evaluating comments or revisions to an IEEE standard is welcome to join the relevant IEEE working group at http://standards.ieee.org/develop/wg/.

Comments on standards should be submitted to the following address:

Secretary, IEEE-SA Standards Board

445 Hoes Lane

Piscataway, NJ 08854

USA

Photocopies: Authorization to photocopy portions of any individual standard for internal or personal use is granted by The Institute of Electrical and Electronics Engineers, Inc., provided that the appropriate fee is paid to Copyright Clearance Center. To arrange for payment of licensing fee, please contact Copyright Clearance Center, Customer Service, 222 Rosewood Drive, Danvers, MA 01923 USA; +1 978 750 8400. Permission to photocopy portions of any individual standard for educational classroom use can also be obtained through the Copyright Clearance Center.

Documents
Document Sharing Hub

Authorized licensed use limited to: Tsinghua University. Downloaded on February 26,2026 at 08:07:53 UTC from IEEE Xplore. Restrictions apply.

Full document details: ISO/IEC/IEEE 8802-1BR-2016

Notice to users

Laws and regulations

Users of IEEE Standards documents should consult all applicable laws and regulations. Compliance with the provisions of any IEEE Standards document does not imply compliance to any applicable regulatory requirements. Implementers of the standard are responsible for observing or referring to the applicable regulatory requirements. IEEE does not, by the publication of its standards, intend to urge action that is not in compliance with applicable laws, and these documents may not be construed as doing so.

Copyrights

This document is copyrighted by the IEEE. It is made available for a wide variety of both public and private uses. These include both use, by reference, in laws and regulations, and use in private self-regulation, standardization, and the promotion of engineering practices and methods. By making this document available for use and adoption by public authorities and private users, the IEEE does not waive any rights in copyright to this document.

Updating of IEEE documents

Users of IEEE Standards documents should be aware that these documents may be superseded at any time by the issuance of new editions or may be amended from time to time through the issuance of amendments, corrigenda, or errata. An official IEEE document at any point in time consists of the current edition of the document together with any amendments, corrigenda, or errata then in effect. In order to determine whether a given document is the current edition and whether it has been amended through the issuance of amendments, corrigenda, or errata, visit the IEEE-SA Website at http://standards.ieee.org/index.html or contact the IEEE at the address listed previously. For more information about the IEEE Standards Association or the IEEE standards development process, visit IEEE-SA Website at http://standards.ieee.org/index.html.

Errata

Errata, if any, for this and all other standards can be accessed at the following URL: http://standards.ieee.org/findstds/errata/index.html. Users are encouraged to check this URL for errata periodically.

Patents

Attention is called to the possibility that implementation of this standard may require use of subject matter covered by patent rights. By publication of this standard, no position is taken by the IEEE with respect to the existence or validity of any patent rights in connection therewith. If a patent holder or patent applicant has filed a statement of assurance via an Accepted Letter of Assurance, then the statement is listed on the IEEE-SA Website at http://standards.ieee.org/about/sasb/patcom/patents.html. Letters of Assurance may indicate whether the Submitter is willing or unwilling to grant licenses under patent rights without compensation or under reasonable rates, with reasonable terms and conditions that are demonstrably free of any unfair discrimination to applicants desiring to obtain such licenses.

Documents
Document Sharing Hub
Authorized licensed use limited to: Tsinghua University. Downloaded on February 26,2026 at 08:07:53 UTC from IEEE Xplore. Restrictions apply.
© IEEE 2012 – All rights reserved
Full document details: ISO/IEC/IEEE 8802-1BR-2016

Essential Patent Claims may exist for which a Letter of Assurance has not been received. The IEEE is not responsible for identifying Essential Patent Claims for which a license may be required, for conducting inquiries into the legal validity or scope of Patents Claims, or determining whether any licensing terms or conditions provided in connection with submission of a Letter of Assurance, if any, or in any licensing agreements are reasonable or non-discriminatory. Users of this standard are expressly advised that determination of the validity of any patent rights, and the risk of infringement of such rights, is entirely their own responsibility. Further information may be obtained from the IEEE Standards Association.

Documents
Document Sharing Hub
Authorized licensed use limited to: Tsinghua University. Downloaded on February 26,2026 at 08:07:53 UTC from IEEE Xplore. Restrictions apply.
© IEEE 2012 – All rights reserved
Full document details: ISO/IEC/IEEE 8802-1BR-2016

Participants

At the time this standard was approved, the IEEE 802.1 Working Group had the following voting members:

Tony Jeffree, *Chair*
Glenn Parsons, *Vice Chair*
Patricia Thaler, *Data Center Bridging Task Group Chair*
Joe Pelissier, *Editor*

Zehavit Alon
Yafan An
Ting Ao
Peter Ashwood-Smith
Christian Boiger
Paul Bottorff
Rudolf Brandner
Craig Carlson
Xin Chang
Weiying Cheng
Paul Congdon
Rodney Cummings
Claudio DeSanti
Zhemin Ding
Donald Eastlake, 3rd
Janos Farkas
Donald Fedyk
Norman Finn
Geoffrey Garner
Anoop Ghanwani
Franz Goetz
Mark Gravel
Eric Gray
Yingjie Gu
Craig Gunther
Stephen Haddock
Hitoshi Hayakawa
Girault Jones
Daya Kamath
Hal Keen
Srikanth Keesara
Yongbum Kim
Philippe Klein
Oliver Kleineberg
Michael Krause
Lin Li
Jeff Lynch
Ben Mack-Crane
David Martin
John Messenger
John Morris
Eric Multanen
Yukihiro Nakagawa
David Olsen
Donald Pannell
Mark Pearson
Rene Raeber
Karen Randall
Josef Roese
Dan Romascanu
Jessy Rouyer
Ali Sajassi
Panagiotis Saltsidis
Michael Seaman
Koichiro Seto
Rakesh Sharma
Takeshi Shimizu
Kevin Stanton
Robert Sultan
Michael Johas Teener
Jeremy Touve
Maarten Vissers
Yuehua Wei
Min Xiao

The following members of the individual balloting committee voted on this standard. Balloters may have voted for approval, disapproval, or abstention.

Thomas Alexander
Hugh Barrass
Nancy Bravin
William Byrd
Craig Carlson
Keith Chow
Charles Cook
Rodney Cummings
Claudio DeSanti
Patrick Diamond
Thomas Dineen
Sourav Dutta
Richard Edgar
Yukihiro Fujimoto
Ilango Ganga
Evan Gilman
Randall C. Groves
Stephen Haddock
Noriyuki Ikeuchi
Atsushi Ito
Raj Jain
Tony Jeffree
Peter Jones
Shinkyo Kaku
Piotr Karocki
Stuart Kerry
Yongbum Kim
Paul Lambert
Brian L'Ecuyer
Greg Luri
Michael Lynch
Elvis Maculuba
Arthur Marris
David Martin
Gary Michel
Jose Morales
Yukihiro Nakagawa
Michael S. Newman
Nick S.A. Nikjoo
Satoshi Obara
Maximilian Riegel
Benjamin Rolfe
Jessy Rouyer
Herbert Ruck
Panagiotis Saltsidis
Bartien Sayogo
Rich Seifert
Gil Shultz
Kapil Sood
Matthew Squire
Manikantan Srinivasan
Thomas Starai
Walter Struppler
Joseph Tardo
William Taylor
Michael Johas Teener
Patricia Thaler
Dmitri Varsanofiev
Prabodh Varshney
John Vergis
Karl Weber
Yuehua Wei
Ludwig Winkel
Oren Yuen

Documents
Document Sharing Hub
Authorized licensed use limited to: Tsinghua University. Downloaded on February 26,2026 at 08:07:53 UTC from IEEE Xplore. Restrictions apply.
© IEEE 2012 – All rights reserved
Full document details: ISO/IEC/IEEE 8802-1BR-2016

When the IEEE-SA Standards Board approved this standard on 14 May 2012, it had the following membership:

Richard H. Hulett, *Chair*
John Kulick, *Vice Chair*
Robert M. Grow, *Past Chair*

Satish Aggarwal
Masayuki Ariyoshi
Peter Balma
William Bartley
Ted Burse
Clint Chaplin
Wael Diab
Jean-Philippe Faure
Alexander Gelman
Paul Houzé
Jim Hughes
Young Kyun Kim
Joseph L. Koepfinger*
David J. Law
Thomas Lee
Hung Ling
Oleg Logvinov
Ted Olsen
Gary Robinson
Jon Walter Rosdahl
Mike Seavey
Yatin Trivedi
Phil Winston
Yu Yuan

*Member Emeritus

Also included are the following nonvoting IEEE-SA Standards Board liaisons:

Richard DeBlasio, *DOE Representative*
Michael Janezic, *NIST Representative*

Michelle Turner
IEEE Standards Program Manager, Document Development

Kathryn Bennett
IEEE Standards Program Manager, Technical Program Development

Documents
Document Sharing Hub
Authorized licensed use limited to: Tsinghua University. Downloaded on February 26,2026 at 08:07:53 UTC from IEEE Xplore. Restrictions apply.
© IEEE 2012 – All rights reserved
Full document details: ISO/IEC/IEEE 8802-1BR-2016

Introduction

This introduction is not part of IEEE Std 802.1BR-2012, IEEE Standard for Local and metropolitan area networks—Virtual Bridged Local Area Networks—Bridge Port Extension.

This standard specifies the devices, protocols, procedures, and managed objects necessary to extend a bridge and its management beyond its physical enclosure using IEEE 802® LAN technologies.

To this end, it:

a) Identifies and isolates traffic between ports within an Extended Bridge;
b) Specifies a tag format for this identification;
c) Establishes an Extended Bridge consisting of a Controlling Bridge and one or more Bridge Port Extenders;
d) Specifies the functionality and the specific requirements of a Bridge Port Extender;
e) Extends the MAC service of a Bridge Port across the interconnected Bridge Port Extenders, including support of Customer Virtual Local Area Networks (C-VLANs).
f) Establishes the requirements of bridge components and systems for the attachment of Bridge Port Extenders;
g) Specifies a protocol to provide for the configuration and monitoring of Bridge Port Extenders by a Controlling Bridge; and
h) Establishes the requirements for Bridge Management to support Port Extension, identifying the managed objects and defining the management operations.

This standard contains state-of-the-art material. The area covered by this standard is undergoing evolution. Revisions are anticipated within the next few years to clarify existing material, to correct possible errors, and to incorporate new related material. Information on the current revision state of this and other IEEE 802 standards may be obtained from:

Secretary, IEEE-SA Standards Board
445 Hoes Lane
Piscataway, NJ 08854
USA

Documents
Document Sharing Hub
Authorized licensed use limited to: Tsinghua University. Downloaded on February 26,2026 at 08:07:53 UTC from IEEE Xplore. Restrictions apply.
© IEEE 2012 – All rights reserved
Full document details: ISO/IEC/IEEE 8802-1BR-2016

Contents

1. Overview ... 1

1.1 Scope ... 1
1.2 Purpose ... 2

2. Normative references ... 3

3. Definitions ... 4

4. Acronyms and abbreviations ... 6

5. Conformance ... 7

5.1 Terminology ... 7
5.2 Protocol Implementation Conformance Statement (PICS) ... 7
5.3 Bridge Port Extender Conformance ... 7
5.4 Controlling Bridge Conformance ... 8

6. Principles of Bridge Port Extension ... 10

6.1 Bridge Port Extension Overview ... 10
6.2 Extended Bridge ... 11
6.3 Base and aggregating Bridge Port Extenders ... 13
6.4 Bridge Port Extender operation ... 14
6.5 Bridge Port Extender architecture ... 16
6.6 Bridge Port Extender Model of operation ... 17
6.7 Bridge Port Extender Frame Reception ... 19
6.8 Bridge Port Extender Transmit and Receive ... 19
6.9 Bridge Port Extender tag handler ... 20
6.10 Bridge Port Extender Internal Sublayer Service ... 21
6.11 Bridge Port Extender Forwarding Process ... 25
6.12 Bridge Port Extender Filtering Database ... 29
6.13 Determination of the Upstream Port ... 29
6.14 Upstream Port Addressing ... 30
6.15 Bridge Port Extender Initialization ... 30
6.16 Support of Congestion Points ... 31

7. Tagged frame format ... 32

7.1 Representation and encoding of tag fields ... 32
7.2 Tag format ... 32
7.3 Tag Protocol Identifier (TPID) formats ... 32
7.4 Tag Protocol Identification ... 32
7.5 E-TAG Control Information ... 32

8. Support of Bridge Port Extension by C-VLAN components ... 35

8.1 Use of Tags ... 36
8.2 Bridge Port Extension Port Types ... 36
8.3 Internal Bridge Port Extender Cascade Ports ... 37
8.4 Bridge Port Extender Upstream Ports ... 39

Documents
Document Sharing Hub
Authorized licensed use limited to: Tsinghua University. Downloaded on February 26,2026 at 08:07:53 UTC from IEEE Xplore. Restrictions apply.
© IEEE 2012 – All rights reserved
Full document details: ISO/IEC/IEEE 8802-1BR-2016

8.5 External Extended Ports ... 39
8.6 External Bridge Port Extender Cascade Ports ... 40
8.7 Traffic isolation ... 41
8.8 Support of Port Extension by a C-VLAN component MAC Relay ... 41
8.9 Remote replication ... 42
8.10 Support of Remote Replication by a Controlling Bridge ... 43
8.11 Assignment of E-CIDs ... 44
8.12 Support of Congestion Notification ... 45

9. Port Extender Control and Status Protocol ... 46

9.1 Port Selection and Addressing ... 46
9.2 PE CSP State Machines ... 46
9.3 Protocol Errors ... 52
9.4 PE CSP PDUs ... 52
9.5 Basic TLV format ... 52
9.6 Command TLV ... 54
9.7 Flow Control ... 56
9.8 Messages ... 56
9.9 Additional TLVs ... 61

10. Bridge management ... 72

10.1 Data types ... 72
10.2 Bridge Port Extension Entries ... 72

11. Management Information Base (MIB) ... 75

11.1 Structure of the IEEE8021-PE MIB ... 75
11.2 Relationship to other MIBs ... 76
11.3 Security considerations ... 76
11.4 Definition of the IEEE8021-PE MIB Module ... 78

Annex A (normative) PICS proforma ... 89

Annex B (normative) IEEE 802.1 Organizationally Specific TLVs ... 105

Annex C (informative) Utilizing VDP with Port Extension ... 114

Annex D (informative) Extended Bridge Initialization ... 116

Annex E (informative) Bibliography ... 121

Documents
Document Sharing Hub
Authorized licensed use limited to: Tsinghua University. Downloaded on February 26,2026 at 08:07:53 UTC from IEEE Xplore. Restrictions apply.
© IEEE 2012 – All rights reserved
Full document details: ISO/IEC/IEEE 8802-1BR-2016

Figures

Figure 6-1—Extended Bridge ... 10
Figure 6-2—Aggregating and base Bridge Port Extenders ... 14
Figure 6-3—External Bridge Port Extender architecture ... 16
Figure 6-4—Internal Bridge Port Extender architecture ... 17
Figure 6-5—Relaying MAC frames in an External Bridge Port Extender ... 18
Figure 6-6—Operation of Bridge Port Extender Control and Status Protocol Agent ... 18
Figure 6-7—Port connectivity ... 20
Figure 6-8—Bridge Port Extender Forwarding Process functions ... 26
Figure 7-1—E-TAG TCI format ... 32
Figure 8-1—Internal organization of the MAC sublayer in an Extended Bridge ... 35
Figure 8-2—Extended Bridge Interconnection ... 37
Figure 8-3—Cascaded Bridge Port Extenders ... 40
Figure 8-4—Extended Bridge traffic isolation ... 41
Figure 9-1—PE CSP Receive PDU state machine ... 47
Figure 9-2—PE CSP Transmit PDU state machine ... 47
Figure 9-3—PE CSP Local Request state machine ... 48
Figure 9-4—PE CSP Remote Request state machine ... 48
Figure 9-5—Basic TLV format ... 52
Figure 9-6—Command TLV ... 54
Figure 9-7—Resource Limit Capability TLV ... 61
Figure 9-1—Port Parameters TLV ... 63
Figure 9-8—Port Array TLV ... 64
Figure 9-9—Port Entry ... 64
Figure 9-10—VID Array TLV ... 65
Figure 9-11—VID Entry ... 65
Figure 9-12—Port Status TLV ... 66
Figure 9-13—Statistics TLV ... 66
Figure 9-14—Object Name TLV ... 67
Figure 9-15—Object Value TLV ... 67
Figure 9-16—CN Parameters TLV ... 70
Figure 9-17—Basic format for Organizationally Specific TLVs ... 71
Figure B.1—Port Extension TLV format ... 105
Figure C.1—Relationship of Port Extension and EVB ... 114
Figure C.2—Port Extension and EVB combined architecture ... 115
Figure D.1—Attachment of a physical Bridge Port Extender ... 117
Figure D.2—Attachment of a downstream Bridge Port Extender ... 118
Figure D.3—Example Initialization Message Flow ... 120

Documents
Document Sharing Hub
Authorized licensed use limited to: Tsinghua University. Downloaded on February 26,2026 at 08:07:53 UTC from IEEE Xplore. Restrictions apply.
© IEEE 2012 – All rights reserved
Full document details: ISO/IEC/IEEE 8802-1BR-2016

Tables

Table 6-1—Bridge Port Extender Initialization ... 31
Table 6-2—Bridge Port Extender Port Initialization ... 31
Table 7-1—E-TAG EtherType allocation ... 32
Table 8-1—Bridge Port Extender parameter settings ... 38
Table 9-1—Port Extender Control and Status Protocol—Time out Values ... 52
Table 9-2—TLV type values ... 53
Table 9-3—Completion Codes ... 54
Table 9-4—Message Types ... 55
Table 9-5—Priority Code Point Selection Encoding ... 64
Table 9-6—Action Values ... 65
Table 9-8—Statistics TLV contents ... 66
Table 9-7—Action Values ... 66
Table 9-9—Reference ... 67
Table 9-10—Get Objects Value Error Codes ... 68
Table 9-11—Set Object Value Error Codes ... 68
Table 9-12—CN Parameter Fields ... 70
Table 10-1—Port Extension Port Table row elements ... 73
Table 10-3—Port Extension Upstream Port ETS Table row elements ... 74
Table 10-2—Port Extension Remote Replication Table row elements ... 74
Table 11-1—PE MIB structure and object cross reference ... 75
Table B.1—IEEE 802.1 Organizationally Specific TLVs ... 105
Table B.2—IEEE 802.1/LLDP extension MIB object cross reference ... 106

Documents
Document Sharing Hub
Authorized licensed use limited to: Tsinghua University. Downloaded on February 26,2026 at 08:07:53 UTC from IEEE Xplore. Restrictions apply.
© IEEE 2012 – All rights reserved
Full document details: ISO/IEC/IEEE 8802-1BR-2016

IEEE Standard for Local and metropolitan area networks—

Virtual Bridged Local Area Networks—Bridge Port Extension

IMPORTANT NOTICE: Implementers of IEEE Standards documents are responsible for determining and complying with all appropriate safety, security, environmental, health, and interference protection practices and all applicable laws and regulations.

This IEEE document is made available for use subject to important notices and legal disclaimers. These notices and disclaimers appear in all publications containing this document and may be found under the heading "Important Notice" or "Important Notices and Disclaimers Concerning IEEE Documents." They can also be obtained on request from IEEE or viewed at http://standards.ieee.org/IPR/disclaimers.html.

1. Overview

This standard specifies a Bridge Port Extender that provides the capability to extend MAC service over an Extended Bridge. This capability may be used, for example, to extend a bridge over multiple physical devices or to extend the MAC service of a bridge to a virtual end station.

1.1 Scope

This standard specifies the devices, protocols, procedures, and managed objects necessary to extend a bridge and its management beyond its physical enclosure using IEEE 802® LAN technologies.

To this end, it:

a) Identifies and isolates traffic between ports within an Extended Bridge;
b) Specifies a tag format for this identification;
c) Establishes an Extended Bridge consisting of a Controlling Bridge and one or more Bridge Port Extenders;
d) Specifies the functionality and the specific requirements of a Bridge Port Extender;
e) Extends the MAC service of a Bridge Port across the interconnected Bridge Port Extenders, including support of Customer Virtual Local Area Networks (C-VLANs).

Documents
Document Sharing Hub
Authorized licensed use limited to: Tsinghua University. Downloaded on February 26,2026 at 08:07:53 UTC from IEEE Xplore. Restrictions apply.
© IEEE 2012 – All rights reserved
Full document details: ISO/IEC/IEEE 8802-1BR-2016

f) Establishes the requirements of bridge components and systems for the attachment of Bridge Port Extenders;

g) Specifies a protocol to provide for the configuration and monitoring of Bridge Port Extenders by a Controlling Bridge; and

h) Establishes the requirements for Bridge Management to support Port Extension, identifying the managed objects and defining the management operations.

1.2 Purpose

The purpose of this standard is to extend a bridge, and the management of its objects, beyond its physical enclosure using IEEE 802 LAN technologies and interoperable interfaces.

Documents
Document Sharing Hub

Authorized licensed use limited to: Tsinghua University. Downloaded on February 26,2026 at 08:07:53 UTC from IEEE Xplore. Restrictions apply.
© IEEE 2012 – All rights reserved

Full document details: ISO/IEC/IEEE 8802-1BR-2016

2. Normative references

The following referenced documents are indispensable for the application of this document (i.e., they must be understood and used, so each referenced document is cited in the text and its relationship to this document is explained). For dated references, only the edition cited applies. For undated references, the latest edition of the referenced document (including any amendments or corrigenda) applies.

IEEE Std 802.1AB™, IEEE Standard for Local and metropolitan area networks—Station and Media Access Control—Connectivity Discovery.[1, 2]

IEEE Std 802.1Q™-2011, IEEE Standard for Local and Metropolitan Area Networks—Media Access Control (MAC) and Virtual Bridged Local Area Networks (as amended).

IEEE Std 802.1Qaz™-2011, IEEE Standard for Local and metropolitan area networks—Media Access Control (MAC) Bridges and Virtual Bridged Local Area Networks—Amendment 18: Enhanced Transmission Selection for Bandwidth Sharing Between Traffic Classes.

IEEE Std 802.1Qbb™-2011, IEEE Standard for Local and metropolitan area networks—Media Access Control (MAC) Bridges and Virtual Bridged Local Area Networks—Amendment 17: Priority-based Flow Control.

IEEE Std 802.1Qbc™-2011, IEEE Standard for Local and metropolitan area networks—Media Access Control (MAC) Bridges and Virtual Bridged Local Area Networks—Amendment 16: Provider Bridging—Remote Customer Service Interfaces.

IEEE Std 802.1Qbe™-2011, IEEE Standard for Local and metropolitan area networks—Media Access Control (MAC) Bridges and Virtual Bridged Local Area Networks—Amendment 15: Multiple I-SID Registration Protocol.

IEEE Std 802.1Qbg™-2012, IEEE Standard for Local and metropolitan area networks—Media Access Control (MAC) Bridges and Virtual Bridged Local Area Networks—Admendment 21: Edge Virtual Bridging.

IEEE Std 802.3.1™-2011, IEEE Standard for Management Information Base (MIB) Definitions for Ethernet.

IETF RFC 1042, A Standard for the Transmission of IP Datagrams over IEEE 802 Networks, Postel, J., and Reynolds, J., February 1988.[3]

IETF RFC 1390, STD 36, Transmission of IP and ARP over FDDI Networks, Katz, D., January 1993.

IETF RFC 2578, STD 58, Structure of Management Information Version 2 (SMIv2), McCloghrie, K., et al., April 1999.

ISO/IEC TR 11802-5:1997, Information technology—Telecommunications and information exchange between systems—Local and metropolitan area networks—Technical reports and guidelines—Part 5: Media Access Control (MAC) Bridging of Ethernet V2.0 in Local Area Networks.[4]

[1]IEEE publications are available from The Institute of Electrical and Electronics Engineers (http://standards.ieee.org/).

[2]The IEEE standards or products referred to in this clause are trademarks of The Institute of Electrical and Electronics Engineers, Inc.

[3]IETF documents (i.e., RFCs) are available for download at http://www.rfc-archive.org/.

[4]ISO/IEC publications are available from the ISO Central Secretariat (http://www.iso.org/). ISO publications are also available in the United States from the American National Standards Institute (http://www.ansi.org/).

Documents
Document Sharing Hub

Authorized licensed use limited to: Tsinghua University. Downloaded on February 26,2026 at 08:07:53 UTC from IEEE Xplore. Restrictions apply.
© IEEE 2012 – All rights reserved
Full document details: ISO/IEC/IEEE 8802-1BR-2016

3. Definitions

For the purposes of this document, the definitions in Clause 3 of IEEE Std 802.1Q and the following terms and definitions apply.[5] The *IEEE Standards Dictionary Online* should be consulted for terms not defined in this clause.[6]

Aggregating Port Extender: A Bridge Port Extender that supports the full E-channel Identifier (E-CID) space and is capable of aggregating base Port Extenders.

Base Port Extender: A Bridge Port Extender that supports a subset of the E-channel Identifier (E-CID) space.

Bridge Port Extender: A device used to extend the MAC service of a C-VLAN component to form a Controlling Bridge and to extend the MAC service of a Controlling Bridge to form an Extended Bridge.

Cascade Port: A Port of a Controlling Bridge or Bridge Port Extender that connects to an Upstream Port. In the case of the connection between two Bridge Port Extenders, the Cascade Port is the Port closest to the Controlling Bridge.

Controlling Bridge: A Bridge that supports one or more Bridge Port Extenders.

E-channel: An instance of the MAC service supported by a set of two E-paths forming a bidirectional service. An E-channel is point-to-point or point-to-multipoint.

E-channel Identifier (E-CID): A value conveyed in a E-TAG that identifies an E-channel.

E-path: A configured unidirectional connectivity path between an internal Extended Port and one or more external Extended Ports and/or Upstream Ports. E-paths originating from the Internal Bridge Port Extender can be point-to-point or point-to-multipoint. E-paths originating from an External Bridge Port Extender can be point-to-point or multipoint-to-point.

E-TAG: A tag header with a Tag Protocol Identification value allocated for "IEEE 802.1BR E-Tag Type."

Extended Bridge: A Controlling Bridge and at least one Bridge Port Extender under the Controlling Bridge's control.

Extended Port: A Port of a Bridge Port Extender that is not operating as a Cascade Port or Upstream Port. This includes the Ports of a Bridge Port Extender connected via internal LANs to the Port of a C-VLAN component within a Controlling Bridge.

External Bridge Port Extender: A Bridge Port Extender that is not physically part of a Controlling Bridge but is controlled by the Controlling Bridge.

external Extended Port: An Extended Port that is part of an External Bridge Port Extender.

Internal Bridge Port Extender: A Bridge Port Extender that is physically part of a Controlling Bridge.

internal Extended Port: An Extended Port that is part of an Internal Bridge Port Extender.

[5]Information on references can be found in Clause 2.

[6]*IEEE Standards Dictionary Online* subscription is available at: http://www.ieee.org/portal/innovate/products/standard/standards_dictionary.html.

Documents
Document Sharing Hub
Authorized licensed use limited to: Tsinghua University. Downloaded on February 26,2026 at 08:07:53 UTC from IEEE Xplore. Restrictions apply.
© IEEE 2012 – All rights reserved
Full document details: ISO/IEC/IEEE 8802-1BR-2016

Port Extender Control and Status Agent: The entity within a Bridge Port Extender that implements the Port Extender Control and Status Protocol (PE CSP).

Port Extender Control and Status Protocol (PE CSP): A protocol used between a Controlling Bridge and Bridge Port Extenders that provides the ability of the Controlling Bridge to assert control over and retrieve status information from its associated Bridge Port Extenders.

Replication Group: Within a Controlling Bridge, the set of C-VLAN component Ports connected to a single Bridge Port Extender.

Upstream Port: A Port on a Bridge Port Extender that connects to a Cascade Port. In the case of the connection between two Bridge Port Extenders, the Upstream Port is the Port furthest from the Controlling Bridge.

Documents
Document Sharing Hub

Authorized licensed use limited to: Tsinghua University. Downloaded on February 26,2026 at 08:07:53 UTC from IEEE Xplore. Restrictions apply.
© IEEE 2012 – All rights reserved
Full document details: ISO/IEC/IEEE 8802-1BR-2016

4. Acronyms and abbreviations

The acronyms and abbreviations in Clause 4 of IEEE Std 802.1Q and the following abbreviations are used in this standard:

E-CID	E-channel Identifier
PCID	Port E-CID
PE CSP	Port Extender Control and Status Protocol
PEISS	Port Extender Internal Sublayer Service

Documents
Document Sharing Hub
Authorized licensed use limited to: Tsinghua University. Downloaded on February 26,2026 at 08:07:53 UTC from IEEE Xplore. Restrictions apply.
© IEEE 2012 – All rights reserved
Full document details: ISO/IEC/IEEE 8802-1BR-2016

5. Conformance

This clause specifies the mandatory and optional capabilities provided by conformant implementations of this standard.

5.1 Terminology

For consistency with IEEE and existing IEEE 802.1™ standards terminology, requirements placed upon conformant implementations of this standard are expressed using the following terminology:

a) ***shall*** is used for mandatory requirements;
b) ***may*** is used to describe implementation or administrative choices ("may" means "is permitted to," and hence, "may" and "may not" mean precisely the same thing);
c) ***should*** is used for recommended choices (the behaviors described by "should" and "should not" are both permissible but not equally desirable choices).

The PICS proforma (Annex A) reflects the occurrences of the words *shall, may,* and *should* within the standard.

The standard avoids needless repetition and apparent duplication of its formal requirements by using ***is***, ***is not***, ***are***, and ***are not*** for definitions and the logical consequences of conformant behavior. Behavior that is permitted but is neither always required nor directly controlled by an implementor or administrator, or whose conformance requirement is detailed elsewhere, is described by ***can***. Behavior that never occurs in a conformant implementation or system of conformant implementations is described by ***can not***. The word ***allow*** is used as a replacement for the phrase "support the ability for," and the word ***capability*** means "is able to or can be configured to."

5.2 Protocol Implementation Conformance Statement (PICS)

The supplier of an implementation that is claimed to conform to this standard shall complete a copy of the PICS proforma provided in Annex A and shall provide the information necessary to identify both the supplier and the implementation.

5.3 Bridge Port Extender Conformance

A conformant implementation of a Bridge Port Extender shall:

a) Conform to the relevant standard for Media Access Control (MAC) technology implemented at each Port in support of the MAC Internal Sublayer Service (ISS), as specified in 6.6 and 6.7 of IEEE Std 802.1Q;
b) Support the Port Extender Internal Sublayer Service (PEISS) at each Port, as specified in 6.10;
c) Relay and filter frames as specified in 6.11;
d) For each Port, support a Port E-channel Identifier (PCID) value (6.10.4);
e) Allow E-TAG headers to be inserted and removed from relayed frames, as specified in 6.10;
f) Support determination of and encoding of priority and drop eligibility as specified in 6.9; and
g) Support the removal of Customer VLAN tags (C-TAGs) as specified in 6.9.

A conformant implementation of an External Bridge Port Extender shall:

h) Implement the Port Extender Control and Status Protocol (PE CSP) (Clause 9);
i) Implement Link Layer Discovery Protocol (LLDP) (IEEE Std 802.1AB);

Documents
Document Sharing Hub
Authorized licensed use limited to: Tsinghua University. Downloaded on February 26,2026 at 08:07:53 UTC from IEEE Xplore. Restrictions apply.
© IEEE 2012 – All rights reserved
Full document details: ISO/IEC/IEEE 8802-1BR-2016

j) Implement the LLDP Port Extension Type, Length, Value (TLV) (B.2);

k) Set the destination addresses in all LLDP protocol data units (PDUs) carrying the Port Extension TLV to the Nearest non-TPMR Bridge group address;

l) Process received LLDP PDUs with the destination address set to the Nearest non-TPMR Bridge group address; and

m) Implement the LLDP Port Extension MIB Module (B.3).

A conformant implementation of an External Bridge Port Extender may:

n) Support Priority-based Flow Control (PFC) (5.11 of IEEE Std 802.1Q);

A conformant implementation of an Internal Bridge Port Extender shall:

o) Support PFC (5.11 of IEEE Std 802.1Q) if the C-VLAN component to which it is attached supports PFC.

A conformant implementation of a Bridge Port Extender may:

p) Support congestion notification (CN).

A conformant implementation of a Bridge Port Extender that supports congestion notification shall:

q) Support, on one or more Ports, the creation of at least one Congestion Point (CP) (31.1.1 of IEEE Std 802.1Q);

r) Support, at each Congestion Point, the generation of Congestion Notification Messages (CNMs) (32.7 of IEEE Std 802.1Q) and the removal of Congestion Notification Tags (31.1.1 of IEEE Std 802.1Q);

s) Support the CN Parameters Set and CN Parameters Get messages and associated TLVs within PE CSP (9.8.13, 9.8.14); and

t) Support the Bridge Port Extender specific requirements in 6.16.

NOTE—A Bridge Port Extender operates in conjunction with the Controlling Bridge to implement congestion notification. Specifically, the Bridge Port Extender provides the functionality of the congestion point. The C-VLAN component performs the remaining functionality as specified in IEEE Std 802.1Q.[7]

5.4 Controlling Bridge Conformance

A conformant implementation of a Controlling Bridge shall comprise a conformant C-VLAN component as specified in IEEE Std 802.1Q, and support the instantiation of one or more Internal Bridge Port Extenders (5.3) connected as specified in Clause 8. In addition, the C-VLAN component shall:

a) Implement the PE CSP (Clause 9);

b) Implement LLDP (IEEE Std. 802.1AB);

c) Implement the LLDP Port Extension TLV (B.2);

d) Implement the LLDP Port Extension MIB Module (B.3); and

e) Support the Bridge Port Extension requirements specified in Clause 8.

[7]Notes in text, tables, and figures of a standard are given for information only and do not contain requirements needed to implement this standard.

Documents
Document Sharing Hub
Authorized licensed use limited to: Tsinghua University. Downloaded on February 26,2026 at 08:07:53 UTC from IEEE Xplore. Restrictions apply.
© IEEE 2012 – All rights reserved
Full document details: ISO/IEC/IEEE 8802-1BR-2016

A conformant implementation of a C-VLAN component that utilizes Bridge Port Extension may:

f) Support the Bridge Port Extension Management Objects (10.2);

g) Support the IEEE-PE MIB module (11.4); and

h) Support Congestion Points within a Bridge Port Extender (9.8.13, 9.8.14).

Documents
Document Sharing Hub

Authorized licensed use limited to: Tsinghua University. Downloaded on February 26,2026 at 08:07:53 UTC from IEEE Xplore. Restrictions apply.
© IEEE 2012 – All rights reserved
Full document details: ISO/IEC/IEEE 8802-1BR-2016

6. Principles of Bridge Port Extension

This clause:

a) Explains the principal elements of the operation of Bridge Port Extension and the operation of components within supporting systems, and lists the supporting functions;

b) Establishes a Bridge Port Extension architecture that governs the provision of these functions; and

c) Provides a model of Bridge Port Extension operation in terms of processes and entities that support the functions.

The principal elements of Bridge Port Extension are as follows:

d) Bridge Port Extender

e) Controlling Bridge

These elements combine to form an Extended Bridge.

6.1 Bridge Port Extension Overview

Bridge Port Extension introduces a new component referred to as a Bridge Port Extender that operates in conjunction with a bridge comprised of a C-VLAN component (IEEE Std 802.1Q). An Internal Bridge Port Extender is instantiated internal within a bridge system and attaches via internal LANs to Ports that would otherwise be exposed externally. This is illustrated in Figure 6-1.

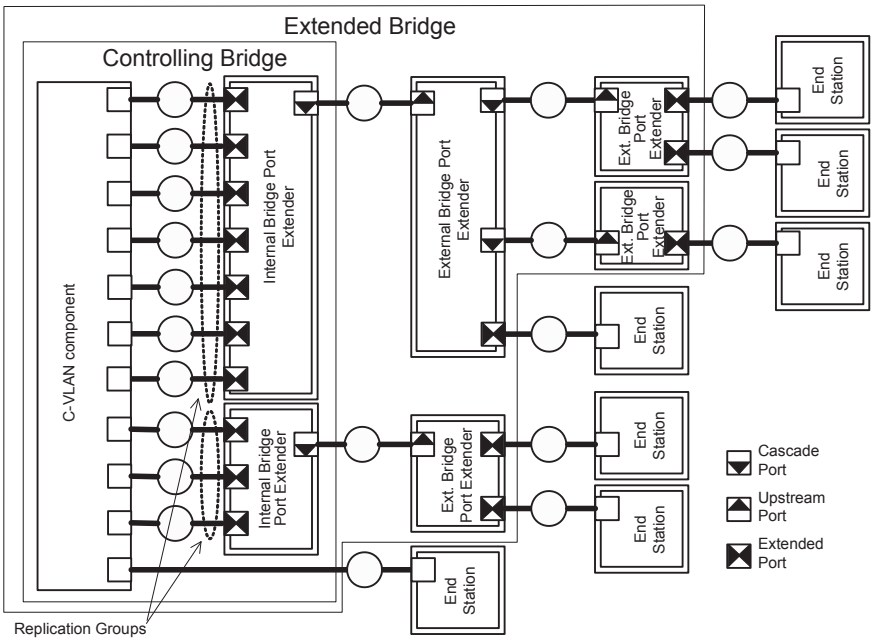

Figure 6-1—Extended Bridge

The Internal Bridge Port Extender aggregates these Ports into a single external Port. An E-TAG is inserted into each frame to provide identification of the port to which each frame belongs.

The aggregated port, referred to as a *Cascade Port,* is attached to an External Bridge Port Extender, or to a tree of Bridge Port Extenders, over a point-to-point LAN. These External Bridge Port Extenders provide a

Documents
Document Sharing Hub
Authorized licensed use limited to: Tsinghua University. Downloaded on February 26,2026 at 08:07:53 UTC from IEEE Xplore. Restrictions apply.
© IEEE 2012 – All rights reserved
Full document details: ISO/IEC/IEEE 8802-1BR-2016

Port, referred to as an *external Extended Port,* corresponding to a C-VLAN component Port. To the user, this provides the ability to extend the Ports of a physical bridge across point-to-point LANs to remote Bridge Port Extenders, including physical Bridge Port Extenders and Bridge Port Extenders instantiated as part of an end station such as a server.

The bidirectional path between the external Extended Port and the corresponding internal Extended Port is referred to as an *E-channel.* A unidirectional path between an internal Extended Port and one or more external Extended Ports is referred to as an *E-path.* An E-channel is comprised of a pair of congruent E-paths, one in each direction. E-paths are also used in multicast. Therefore, E-paths can be point-to-point, point-to-multipoint (i.e., have a single ingress point with multiple egress points), or multipoint-to-point (i.e., have multiple ingress points with a single egress point). The multipoint-to-point E-path is used to return frames in support of congestion notification. E-channels are identified by an E-channel Identifier (E-CID) that is contained in the E-TAG.

The External Bridge Port Extenders utilize the E-TAG to identify a path to the external port on egress, and to the internal port on ingress. Additionally, the External Bridge Port Extenders perform frame replication in support of multicast traffic (e.g., frames that are to be flooded or frames that are addressed to a group address).

The C-VLAN component and the set of attached Internal Bridge Port Extenders is referred to as a *Controlling Bridge.* The set of the Controlling Bridge and the attached External Bridge Port Extenders is referred to as an *Extended Bridge.* The Controlling Bridge provides the single point of management for the extended bridge. The Port Extender Control and Status Protocol (PE CSP) provides the ability for the Controlling Bridge to manage the Bridge Port Extenders under its control.

6.2 Extended Bridge

An example of an Extended Bridge is illustrated in Figure 6-1.

An Extended Bridge is constructed utilizing a single Controlling Bridge and one or more External Bridge Port Extenders. A Controlling Bridge is constructed from a C-VLAN component that supports Port Extension options (Clause 8) and one or more Bridge Port Extenders connected by internal LANs (6.14 of IEEE Std 802.1Q). Bridge Port Extenders enable the extension of the Controlling Bridge by supplying external Ports that correspond to the internal Ports of the C-VLAN component and by performing replication of frames as necessary. The entire Extended Bridge operates as a single bridge and is managed as a single entity.

Bridge Port Extenders may be attached to other Bridge Port Extenders forming a cascade. In this case, each Bridge Port Extender instantiates a single Upstream Port that provides connectivity towards the Controlling Bridge. This topologically forms a loop-free pruned tree. Therefore, within the Extended Bridge (i.e., between the Controlling Bridge and the Bridge Port Extenders), it is not necessary to run spanning tree. The spanning tree protocol operates on the C-VLAN component and the Bridge Protocol Data Units (BPDUs) transit through the intervening Bridge Port Extenders between the C-VLAN component and the external Extended Ports. The same applies to other protocols such as the Multiple Registration Protocol (MRP) family.

Each link between Bridge Port Extenders or between a Bridge Port Extender and its Controlling Bridge contains one Cascade Port (the Port closest to the Controlling Bridge) and one Upstream Port (the Port furthest from the controlling bridge). The Bridge Port Extender Ports that connect to other LAN components (including those that connect to the internal C-VLAN component, end stations, bridges, routers, and other Extended bridges) are referred to as *Extended Ports.*

Documents
Document Sharing Hub

Authorized licensed use limited to: Tsinghua University. Downloaded on February 26,2026 at 08:07:53 UTC from IEEE Xplore. Restrictions apply.
© IEEE 2012 – All rights reserved
Full document details: ISO/IEC/IEEE 8802-1BR-2016

Each internal Extended Port is paired with one Cascade or one external Extended Port. An independent E-channel is formed between the internal Extended Port and its paired Cascade or external Extended Port to enable segregation of the traffic for each Port pair as it traverses the common link.

The external Extended Port provides external connectivity to the Extended Bridge. The Upstream Port provides the termination of the E-channel over which frames between the Controlling Bridge and the Control and Status Agent of the attached Bridge Port Extender flow.

Within the Upstream Port, received frames whose E-CID matches the Port's PCID are forwarded by the PEISS to the MAC Service interface and higher layer entities. Conversely, frames initiated by the higher layer entities via the MAC Service are forwarded through the Upstream Port.

For each internal Extended Port, a corresponding Port is instantiated on the C-VLAN component within the Controlling Bridge. This Port on the C-VLAN component is attached to the internal Extended Port via an internal LAN. As a result, all unicast frames emitted from the Port on the C-VLAN component travel through the E-channel to the corresponding external Extended or Cascade Port. Likewise, every frame received on an external Extended Port, or initiated by a Bridge Port Extender on the Upstream Port, travels through the E-channel to the corresponding Port on the C-VLAN component.

A frame entering an external Extended Port has an E-TAG inserted by the ingress Bridge Port Extender. The same is true for a frame entering a Cascade Port initiated by the attached Bridge Port Extender. The E-CID encoded in the E-TAG identifies the E-channel and is maintained with the frame through any intervening Bridge Port Extenders (the E-TAG may be modified at the boundary between a base and aggregating Bridge Port Extender to support both types in a single cascade). Upon reaching the Controlling Bridge, the Internal Bridge Port Extender removes the E-TAG and forwards the frame to the corresponding Port on the C-VLAN component.

E-channels are configured within Bridge Port Extenders using member sets (similar to the method used to configure VLANs in C-VLAN components). A member set is the set of Bridge Port Extender Ports that are part of the E-channel. The Upstream Port of a Bridge Port Extender is implicitly in the member set of all E-channels. Within a given Bridge Port Extender, an E-channel that is used for unicast has exactly one other Port in its member set. Likewise, within a given Bridge Port Extender, an E-channel that is used for multicast has one or more additional Ports in its member set.

To provide efficient support of Multicast, Bridge Port Extenders provide frame replication. The set of C-VLAN bridge component Ports used for remote replication that attach to a single Internal Bridge Port Extender is referred to as a *Replication Group.* For each combination of Ports within the Replication Group to which a frame may need to be forwarded (based on the current state of the filtering database within the C-VLAN component), an E-channel is allocated. In this case, the E-channel is configured as a point-to-multipoint channel. The E-channel terminates within the Internal Bridge Port Extender at exactly one of the internal Extended Ports that share an internal LAN with one of the Ports in the combination. The selection of which Port within the Internal Bridge Port Extender terminates the E-channel is at the discretion of the implementation. The other end terminates at a set of external Extended Ports.

An E-channel member set is used to identify the set of Extended Ports that ultimately transmit a given multicast frame. The relay function within the C-VLAN component of a Controlling Bridge provides a port map in the connection_identifier parameter of the EM_UNITDATA.request. This port map indicates to which external Extended Ports the frame is to be forwarded. This port map travels with the frame through the ISS and across the internal LAN to the Internal Bridge Port Extender. In addition, the C-VLAN component maintains a Remote Replication Registration Table in each Internal Bridge Port Extender. Each entry in this table contains a port map and E-CID. Upon receipt of a frame with a port map included in the connection_identifier, the Internal Bridge Port Extender finds a matching port map in the Remote Replication Registration Table. The PEISS of the Internal Bridge Port Extender uses the E-CID from the matching entry to construct the E-TAG.

Documents
Document Sharing Hub

Authorized licensed use limited to: Tsinghua University. Downloaded on February 26,2026 at 08:07:53 UTC from IEEE Xplore. Restrictions apply.
© IEEE 2012 – All rights reserved

Full document details: ISO/IEC/IEEE 8802-1BR-2016

The relay function within the C-VLAN component will transmit a multicast frame to all ports of the Internal Bridge Port Extender corresponding to the port map. However, only one internal Extended Port is part of the member set of any given E-channel. Therefore, all but one copy of the frame is discarded.

In addition, if one of the external Extended Ports to which a frame is being forwarded is the Port on which the frame was received and the Port to which the frame is being forwarded is configured to provide reflective relay, ingress_echannel_identifier is set to zero in the connection_identifier parameter. The PEISS within the Internal Bridge Port Extender encodes this value in the E-TAG. As a result, the ingress external Extended Port does not filter the frame.

E-channels do not have an untagged set. Instead the Port type and the value of the per Port parameter PCID determines whether or not the Bridge Port Extender inserts an E-TAG. An Extended Port never inserts an E-TAG. In the case of a Cascade Port or an Upstream Port, an E-TAG is inserted if the E-CID associated with a frame does not match the PCID of the Cascade or Upstream Port.

Internal Bridge Port Extenders are configured directly. External Bridge Port Extenders are configured by the Controlling Bridge using the Bridge PE CSP (Clause 9). The entity within a Bridge Port Extender that processes the PE CSP is the Control and Status Agent.

A message is provided in the PE CSP that allows an External Bridge Port Extender to communicate its MAC_Operational status to the Controlling Bridge. The Controlling Bridge reflects this status in the MAC_Enabled parameter of the corresponding internal Extended Port. The setting of the MAC_Enabled parameter on the internal Extended Port is reflected across the internal LAN to the MAC_Operational parameter of the Port in the C-VLAN component. This provides MAC_Operational propagation from the external Extended Port to the C-VLAN component.

An External Bridge Port Extender sets the MAC-Enabled parameter of all Ports not capable of operating as an Upstream Port to FALSE whenever it is not in contact with the Controlling Bridge. MAC-Enabled is set TRUE upon successful completion of the PE CSP Extended Port Create command (9.8.2).

6.3 Base and aggregating Bridge Port Extenders

Two slightly different versions of Bridge Port Extenders are specified. A base Bridge Port Extender supports up to 4095 point-to-point E-channels and up to 12 287 point-to-multipoint E-channels. A Controlling Bridge assigns E-CIDs within a restricted range for base Bridge Port Extenders. For point-to-point E-channels, the range starts at one and ends at the number of point-to-point E-channels supported by the Bridge Port Extender. For point-to-multipoint E-channels, the range starts at 4096 and ends at 4095 plus the number of point-to-multipoint E-channels supported by the Bridge Port Extender (8.11). As a result, the E-CID can simply be used as a pointer into the Bridge Port Extender's Filtering Database enabling a simplified implementation.

An aggregating Bridge Port Extender can support up to 1 048 575 point-to-point E-channels and 3 145 727 point-to-multipoint E-channels. A Controlling Bridge can assign E-CIDs sparsely and the Bridge Port Extender forwarding process (6.11) performs a look-up operation on the E-CID to find the corresponding filtering entry (6.12). In addition, an aggregating Bridge Port Extender can provide additional E-CID bits to the E-Tag produced by a downstream base Bridge Port Extender enabling the aggregating Bridge Port Extender to aggregate multiple base Bridge Port Extenders within a single cascade providing expanded scalability.

An aggregating Bridge Port Extender may be placed downstream of a base Bridge Port Extender; however, the E-CID range that may be used by the aggregating Bridge Port Extender is limited to that of the upstream base Bridge Port Extender.

Documents
Document Sharing Hub

Authorized licensed use limited to: Tsinghua University. Downloaded on February 26,2026 at 08:07:53 UTC from IEEE Xplore. Restrictions apply.
© IEEE 2012 – All rights reserved
Full document details: ISO/IEC/IEEE 8802-1BR-2016

Figure 6-2 illustrates an example Extended Bridge composed of aggregating and base Bridge Port Extenders. In this example, the PCIDs for each port are shown. The PCID is broken down into a triple of GRP bits, extension bits, and base bits separated by periods (see 7.5 and 8.11). The extension bits in a base Bridge Port Extender are always set to zero and are ignored in the E-TAG. Frames sent from the Controlling Bridge to the top End Station are tagged with an E-CID of 0.2.2. The aggregating Bridge Port Extender is configured to forward frames with this E-CID to the top Cascade Port. When the frame arrives at the top base Bridge Port Extender, the extension bits are ignored, and the frame is forwarded to the top Extended Port.

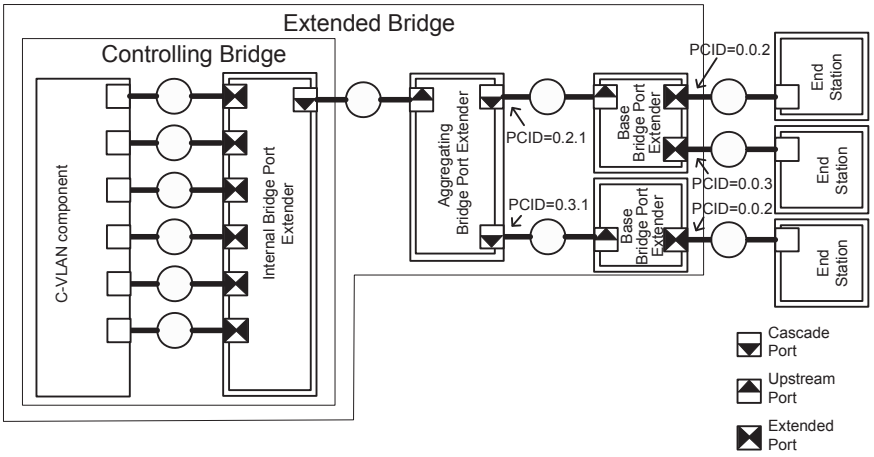

Figure 6-2—Aggregating and base Bridge Port Extenders

Frames sent from the top End Station enter the top base Bridge Port Extender and are tagged with an E-CID of 0.0.2, and forwarded to the aggregating Bridge Port Extender. The aggregating Bridge Port Extender replaces the extension bits with that of the receiving Ports PCID, thus forming an E-CID of 0.2.2. The frame is then forwarded to the Controlling Bridge with an E-CID of 0.2.2.

6.4 Bridge Port Extender operation

The principal elements of Bridge Port Extender operation are as follows:

a) Relay and filtering of frames (6.4.1);
b) Maintenance of the information required to make frame filtering and relaying decisions (6.4.2); and
c) Control of and status collection from items a) and b) (Clause 9).

6.4.1 Relay

A Bridge Port Extender relays individual MAC user data frames between the Upstream Port MACs and the Extended and Cascade Port MACs. The functions that support relaying of frames and maintaining the Quality of Service are as follows:

a) Frame reception (6.7)
b) Discard on received frame in error (6.7.1)
c) Discard of frames that do not carry user data (6.7 of IEEE Std 802.1Q)
d) Priority and drop eligibility decoding from a VLAN TAG, if present (6.9)
e) Classification of each received frame to a particular E-channel (6.10)

Documents
Document Sharing Hub
Authorized licensed use limited to: Tsinghua University. Downloaded on February 26,2026 at 08:07:53 UTC from IEEE Xplore. Restrictions apply.
© IEEE 2012 – All rights reserved
Full document details: ISO/IEC/IEEE 8802-1BR-2016

f) Frame discard to support segregation of traffic on independent E-paths (6.11.1)
g) Frame discard following the application of filtering information (6.12.1)
h) Forwarding of received frames to other Bridge Port Extender Ports (6.11.4)
i) Selection of traffic class and queuing of frames by traffic class (6.11.5)
j) Frame discard to ensure that a maximum Bridge Port Extender transit delay is not exceeded (6.11.5)
k) Preferential discard of drop eligible frames to preserve quality of service (QoS) for other frames (6.11.5)
l) Selection of queued frames for transmission (6.11.6)
m) Mapping of service data units and Frame Check Sequence recalculation, if required (6.10.6)
n) Frame transmission (6.8)

6.4.2 Filtering and relaying information

A Bridge Port Extender maintains filtering and relaying information for the following purposes:

a) Traffic segregation: to separate communication operating over different E-channels;
b) Traffic reduction: to enable replication of frames within Bridge Port Extenders;
c) Traffic expediting: to classify frames in order to expedite time critical traffic; and
d) Frame format conversion: to insert or remove tag headers as appropriate for the destination LAN and stations.

6.4.2.1 Traffic segregation

A Bridge Port Extender filters frames to restrict them to LANs that belong to the E-channels to which they are assigned and, thus, define the E-channel's extent. The functions that support the use and maintenance of information for this purpose are as follows:

a) Configuration of a PCID for each Port, to associate an E-channel with received frames that do not contain an E-TAG and to identify the E-channel for which frames transmitted by the Port are not to carry an E-TAG; and
b) Configuration of E-channel Registration Entries (6.12).

6.4.2.2 Traffic reduction

A Bridge Port Extender performs replication of multicast frames reducing the traffic on links between Bridge Port Extenders (6.10.7).

6.4.2.3 Traffic expediting

A Bridge Port Extender classifies frames into traffic classes in order to expedite transmission of frames generated by critical or time-sensitive services. The function that supports the use and maintenance of information for this purpose is as follows:

a) Explicit configuration of traffic class information associated with the Ports of the Bridge Port Extender.

6.4.2.4 Conversion of frame formats

A Bridge Port Extender adds and removes VLAN tag headers (6.9) and E-TAGs (6.10) from frames and performs the associated frame translations that may be required. The functions that support the use and maintenance of information for this purpose are as follows:

Documents
Document Sharing Hub
Authorized licensed use limited to: Tsinghua University. Downloaded on February 26,2026 at 08:07:53 UTC from IEEE Xplore. Restrictions apply.
© IEEE 2012 – All rights reserved
Full document details: ISO/IEC/IEEE 8802-1BR-2016

a) The Bridge Port Extender Tag Handler (6.9);
b) The Bridge Port Extender ISS (6.10); and
c) The Bridge Port Extender filtering database (6.12).

6.5 Bridge Port Extender architecture

A Bridge Port Extender comprises the following:

a) A MAC Relay Entity that interconnects the Bridge Port Extender's Ports;
b) One Upstream Port (External Bridge Port Extender) or one Cascade Port (Internal Bridge Port Extender);
c) At least one additional Port; and
d) Higher layer entities, including at least a Port Extender Control and Status Protocol Entity (External Bridge Port Extender).

The external and Internal Bridge Port Extender architecture is illustrated in Figure 6-3 and Figure 6-4.[8] The MAC Relay Entity handles the media access method independent functions of filtering frames and relaying frames among Bridge Port Extender Ports. It uses the PEISS (6.10) provided by each Bridge Port Extender Port. Each Bridge Port Extender Upstream Port of External Bridge Port Extenders also functions as an end station providing one instance of the MAC Service. This instance of the MAC Service is provided to a distinct LLC Entity that supports protocol identification, multiplexing, and demultiplexing, for PDU transmission and reception by one or more higher layer entities, including the Port Extender Control and Status Agent. A tag handler function (6.9) on each Extended Port processes C-TAGs.

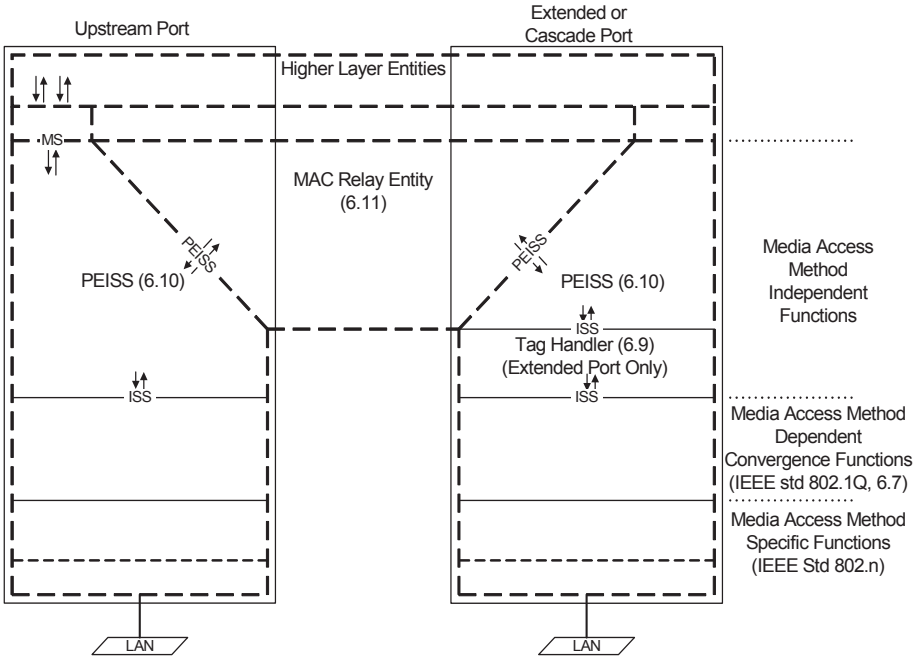

NOTE—The notation "IEEE Std 802.n" in this figure indicates that the specifications for these functions can be found in the relevant standard for the media access method concerned; for example, n would be 3 (IEEE Std 802.3™ [B2]) in the case of Ethernet.

Figure 6-3—External Bridge Port Extender architecture

[8]The numbers in brackets correspond to those of the Bibliography in Annex E.

Documents
Document Sharing Hub
Authorized licensed use limited to: Tsinghua University. Downloaded on February 26,2026 at 08:07:53 UTC from IEEE Xplore. Restrictions apply.
© IEEE 2012 – All rights reserved
Full document details: ISO/IEC/IEEE 8802-1BR-2016

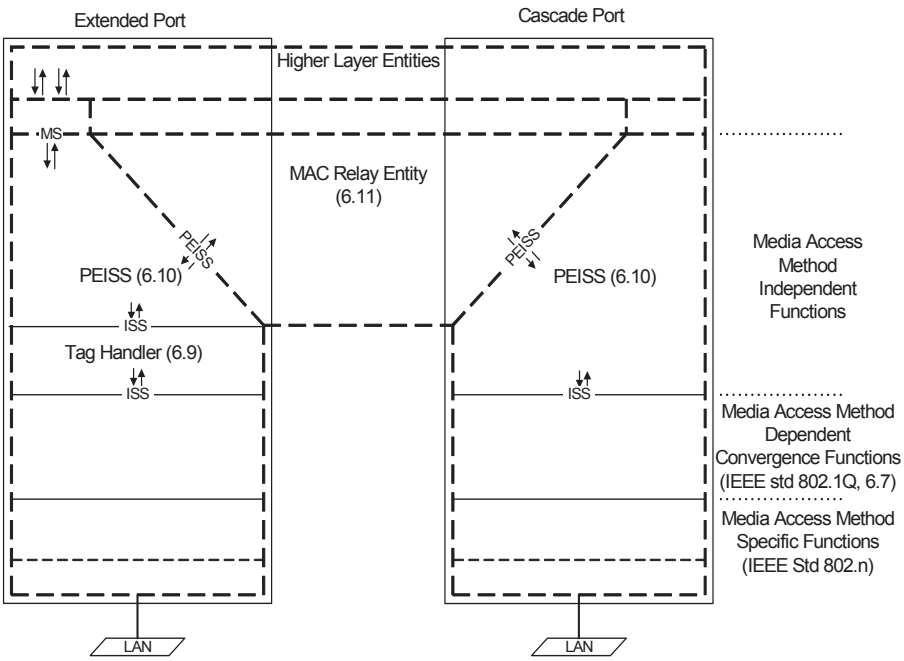

NOTE—The notation "IEEE Std 802.n" in this figure indicates that the specifications for these functions can be found in the relevant standard for the media access method concerned; for example, n would be 3 (IEEE Std 802.3™ [B2]) in the case of Ethernet.

Figure 6-4—Internal Bridge Port Extender architecture

6.6 Bridge Port Extender Model of operation

The model of operation is simply a basis for describing the functionality of the Bridge Port Extender. It is in no way intended to constrain real implementations of a Bridge Port Extender; these may adopt any internal model of operation compatible with the externally visible behavior that this standard specifies. Conformance of equipment to this standard is purely in respect of observable protocol.

The processes and entities that model the operation of a Bridge Port Extender Port include the following:

a) A Bridge Port Extender Port Transmit and Receive Process (6.8) that:
   1) Receives and transmits frames from and to the attached LAN (6.8);
   2) Determines the format, VLAN-tagged or untagged, of transmitted frames; and
   3) Delivers and accepts frames to and from the MAC Relay Entity and LLC Entities.

b) The LLC Entity that supports Higher Layer Entities such as:
   1) Port Extender Control and Status Protocol (PE CSP) (Clause 9); and
   2) Link Layer Discovery Protocol (LLDP) (IEEE Std 802.1AB).

The processes and entities that model the operation of the MAC Relay Entity are the following:

c) The Forwarding Process (6.11), that:
   1) Filters frames based on their E-CID (6.11.1); and
   2) Forwards received frames that are to be relayed to other Bridge Port Extender Ports.

d) The Filtering Database (6.12), that holds filtering information and supports queries by the Forwarding Process as to whether frames with a given value of E-CID can be forwarded to a given Port.

Documents
Document Sharing Hub
Authorized licensed use limited to: Tsinghua University. Downloaded on February 26,2026 at 08:07:53 UTC from IEEE Xplore. Restrictions apply.
© IEEE 2012 – All rights reserved
Full document details: ISO/IEC/IEEE 8802-1BR-2016

Figure 6-5 illustrates a single instance of frame relay between the Ports of a Bridge Port Extender with two Ports. Within an Internal Bridge Port Extender, frame relay takes place between a Cascade Port and the Extended Ports. Within an External Bridge Port Extender, frame relay takes place between the Upstream Port and the set of Cascade and Extended Ports.

Figure 6-6 illustrates the operation of the Port Extender Control and Status Protocol Agent.

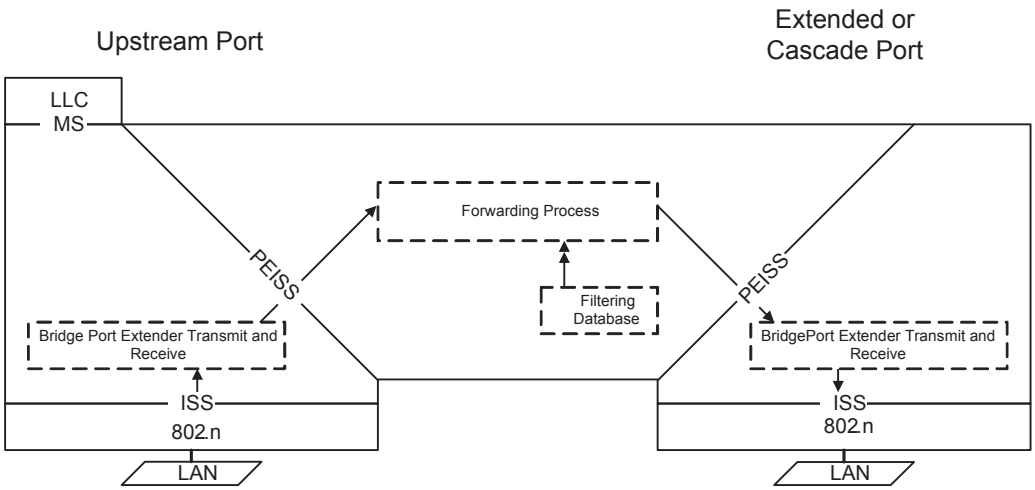

Figure 6-5—Relaying MAC frames in an External Bridge Port Extender

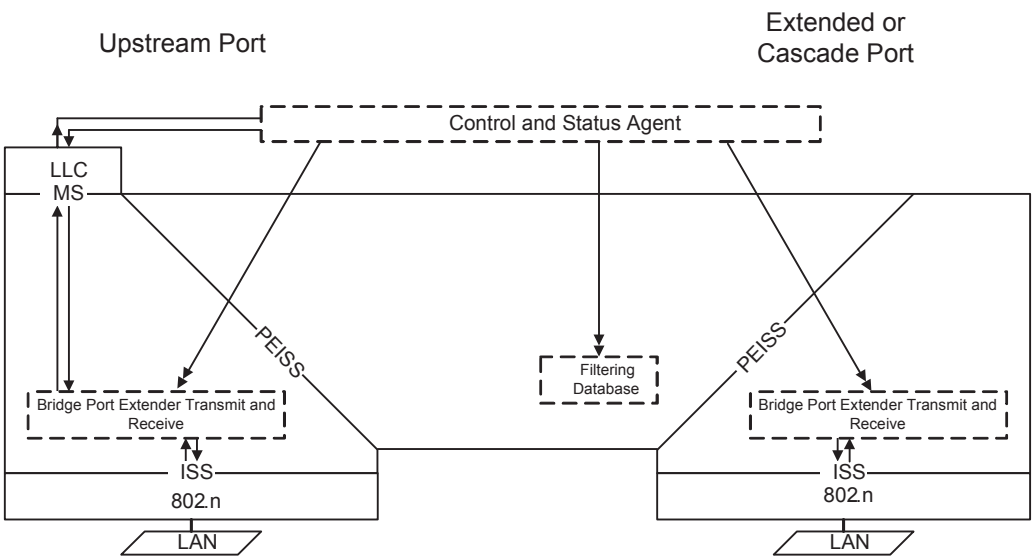

Figure 6-6—Operation of Bridge Port Extender Control and Status Protocol Agent

Documents
Document Sharing Hub
Authorized licensed use limited to: Tsinghua University. Downloaded on February 26,2026 at 08:07:53 UTC from IEEE Xplore. Restrictions apply.
© IEEE 2012 – All rights reserved
Full document details: ISO/IEC/IEEE 8802-1BR-2016

6.7 Bridge Port Extender Frame Reception

Frame reception comprises the following functions:

a) Discard of frames received in error (6.7.1); and
b) Discard of frames that do not contain user data (6.7 of IEEE Std 802.1Q).

6.7.1 Frame Loss

The MAC Service does not guarantee the delivery of Service Data Units. Frames transmitted by a source station arrive, uncorrupted, at the destination station with high probability. The operation of a Bridge Port Extender introduces minimal additional frame loss.

A frame transmitted by a source station can fail to reach its destination station as a result of the following:

a) Frame corruption during physical layer transmission or reception;
b) Frame discard by a Bridge Port Extender because
    1) It is unable to transmit the frame within some maximum period of time and, hence, must discard the frame to prevent the Bridge Port Extender transit delay (6.11.5) from being exceeded;
    2) It is unable to continue to store the frame due to exhaustion of internal buffering capacity as frames continue to arrive at a rate in excess of that at which they can be transmitted;
    3) The size of the service data unit carried by the frame exceeds the maximum supported by the MAC procedures employed on the LAN to which the frame is to be relayed;
    4) The frame was received on a port that is not in the frame's E-channel member set; and
    5) No potential transmission Port is in the member set of the E-channel identified by the frame's E-CID.

6.8 Bridge Port Extender Transmit and Receive

The Port Transmit and Receive process supports the attachment of the Bridge Port Extender Port to a network. It comprises the following functions:

a) Mapping between the PEISS (6.10) provided to the MAC Relay Entity, and the ISS (6.6 of IEEE Std 802.1Q), adding, recognizing, interpreting, and removing E-TAGs;
b) A shim that uses and provides the ISS (6.6 of IEEE Std 802.1Q), recognizing and interpreting C-TAGs as specified in 6.9; and
c) Connectivity between the following ISS access points:
    1) That provided by the MAC Entity for the LAN attached to the Port, as specified in 6.7 of IEEE Std 802.1Q; and
    2) That supporting the MAC Relay Entity; and
    3) On an Upstream Port, an LLC entity.

6.8.1 Port connectivity

Figure 6-7 illustrates Port connectivity. Each M_UNITDATA.indication provided by the ISS access point for an attached LAN shall result in a corresponding M_UNITDATA.indication with identical parameters at each of the access points supporting the MAC Relay and Higher Layer Entities. Each M_UNITDATA.request from the ISS access point supporting the MAC Relay Entity shall result in a corresponding M_UNITDATA.indication with identical parameters at the access point for the LAN. Each M_UNITDATA.request from an ISS access point supporting a Higher Layer Entity shall result in a corresponding M_UNITDATA.indication with identical parameters at the access point for the LAN.

Documents
Document Sharing Hub
Authorized licensed use limited to: Tsinghua University. Downloaded on February 26,2026 at 08:07:53 UTC from IEEE Xplore. Restrictions apply.
© IEEE 2012 – All rights reserved
Full document details: ISO/IEC/IEEE 8802-1BR-2016

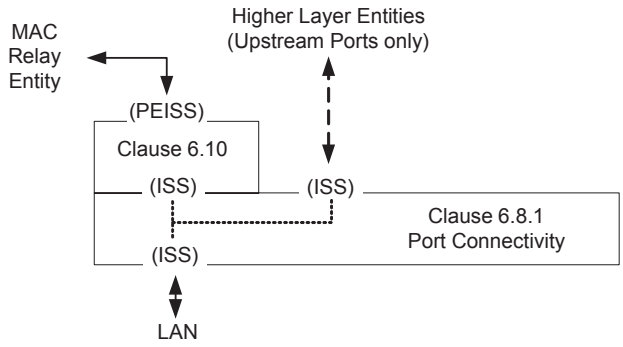

Figure 6-7—Port connectivity

6.8.2 Support of Higher Layer Entities

The MAC Service is provided to a Higher Layer Entity using one of the ISS access points provided for that purpose by the Port connectivity function (6.8.1).

Each ISS M_UNITDATA.indication with a destination MAC address that is either the individual address of a MAC service access point (MSAP) provided by the Port or a group address used by the attached LLC Entity shall cause an MA_UNITDATA.indication at that MSAP with destination address, source address, MSDU, and priority parameters identical to those in the M_UNITDATA.indication. No other indications or frames give rise to indications to the MAC Service user.

Each MA_UNITDATA.request at the MSAP shall result in an M_UNITDATA.request at the ISS access point with identical destination address, source address, MSDU, and priority parameters. Each MA_UNITDATA.request at the MSAP with a destination MAC address that is either the individual address of the MSAP or a group address used by the attached LLC Entity shall also result in an MA_UNITDATA.indication at the MSAP with identical destination address, source address, MSDU, and priority parameters.

NOTE—The requirement to reflect self-addressed MA_UNITDATA.request primitives back as MA_UNITDATA.indications to the MSAP at which they were received exists because the MAC Service expects this behavior (ISO/IEC 15802-1 [B5]) but the ISS does not expect it or provide it.

6.9 Bridge Port Extender tag handler

The functions specified in this subclause comprise a shim that uses an ISS SAP supported by a MAC entity (6.7 of IEEE Std 802.1Q) to provide functions to handle C-TAGs within Bridge Port Extenders. This shim is utilized and instantiated only on Extended Ports, see Figure 6-3 and Figure 6-4.

This shim provides the following functions:

a) Upon a M_UNITDATA.indication within an external Extended Port, determination of a frame's Priority and Drop Eligibility; and

b) Upon a M_UNITDATA.request within an external Extended Port, deletion of the C-TAG if the corresponding VLAN is in the shim's untagged set.

NOTE—On egress from the C-VLAN component of a Controlling Bridge, all frames on point-to-multipoint E-channels contain a C-TAG. Deletion of the C-TAG for Extended Ports that are in the untagged set of the corresponding VLAN is handled by the Extended Port of the External Bridge Port Extender. This is done to facilitate remote replication in which a subset of the Ports to which the frame is replicated may be in the untagged set.

Documents
Document Sharing Hub
Authorized licensed use limited to: Tsinghua University. Downloaded on February 26,2026 at 08:07:53 UTC from IEEE Xplore. Restrictions apply.
© IEEE 2012 – All rights reserved
Full document details: ISO/IEC/IEEE 8802-1BR-2016

To provide this capability, the following parameters are configured for each Extended Port within Bridge Port Extenders:

c) use_dei: Use_DEI parameter as specified in 6.9.3 of IEEE Std 802.1Q; and

d) untagged_vlan_list: Applies only to External Bridge Port Extenders. A list of customer VLANs for which this Port is in the VLAN's untagged set. An External Bridge Port Extender shall support at least one entry in this list.

The setting of these parameters by the Controlling Bridge is specified in Clause 8.

6.9.1 Data Indications

On receipt of an M_UNITDATA.indication primitive from the lower ISS SAP, an M_UNITDATA.indication primitive shall be invoked to the upper ISS SAP with parameter values determined as follows:

a) The priority and drop_eligible parameters of the M_UNITDATA.indication are set as follows:
   1) If the mac_service_data_unit contains a C-TAG, the drop_eligible parameter and received priority are derived from the VLAN tag as specified in 6.9.3 of IEEE Std 802.1Q, and then the priority parameter is regenerated using the received priority as specified in 6.9.4 of IEEE Std 802.1Q; otherwise
   2) The priority and drop_eligible indication are set to the corresponding parameter in the M_UNITDATA.indication from the lower ISS SAP.

b) All other parameters are set to the value in the corresponding parameter in the M_UNITDATA.indication from the lower ISS SAP.

6.9.2 Data Requests

On receipt of an M_UNITDATA.request primitive from the upper ISS SAP destined to an external Extended Port, the following operations shall be performed:

a) Extract the VLAN Identifier (VID) from the C-TAG in the M_UNITDATA.request mac_service_data_unit parameter;

b) If the VID is in the untagged_vlan_list, then remove the C-TAG from the M_UNITDATA.request mac_service_data_unit parameter;

c) Invoke a M_UNITDATA.request to the lower ISS SAP with the following parameters:
   1) The mac_service_data_unit is set to the corresponding parameter in the received data as updated by this process;
   2) The frame_check_sequence parameter is set to the value in the corresponding parameter in the receive data if the mac_service_data_unit was not modified; otherwise the frame_check_sequence parameter is set to indicate invalid;
   3) All other parameters are set to the corresponding parameter in the M_UNITDATA.request from the upper ISS SAP.

On receipt of an M_UNITDATA.request primitive from the upper ISS SAP destined to an internal Extended Port, an M_UNITDATA.request to the lower ISS SAP shall be invoked with all parameters copied from that of the upper ISS SAP.

6.10 Bridge Port Extender Internal Sublayer Service

The Bridge Port Extender Internal Sublayer Service (PEISS) provides for the insertion and removal of E-TAGs.

Documents
Document Sharing Hub

Authorized licensed use limited to: Tsinghua University. Downloaded on February 26,2026 at 08:07:53 UTC from IEEE Xplore. Restrictions apply.
© IEEE 2012 – All rights reserved
Full document details: ISO/IEC/IEEE 8802-1BR-2016

The PEISS provides the same service status and point-to-point parameters as the ISS (6.6.2 and 6.6.3 of IEEE Std 802.1Q).

6.10.1 Service primitives

The unit-data primitives that define this service are as follows:

```
PEM_UNITDATA.indication     (
                            destination_address,
                            source_address,
                            mac_service_data_unit,
                            priority,
                            drop_eligible,
                            ingress_echannel_identifier,
                            echannel_identifier,
                            frame_check_sequence,
                            service_access_point_identifier,
                            connection_identifier
                            )

PEM_UNITDATA.request        (
                            destination_address,
                            source_address,
                            mac_service_data_unit,
                            priority,
                            drop_eligible,
                            ingress_echannel_identifier,
                            echannel_identifier,
                            frame_check_sequence,
                            service_access_point_identifier,
                            connection_identifier
                            )
```

The destination_address, source_address, mac_service_data_unit, priority, drop_eligible, service_access_point_identifier, connection_identifier, and frame_check_sequence parameters are as defined for the ISS.

NOTE—Some of the functions supporting the PEISS may result in changes to the mac_service_data_unit or other parameters used to construct a frame. The original FCS associated with a frame is invalidated if there are changes to any fields of the frame, if fields are added or removed, or if bit ordering or other aspects of the frame encoding have changed. An invalid FCS is signaled in the PEISS by an unspecified value in the frame_check_sequence parameter. This signals the need for the FCS to be regenerated according to the normal procedures for the transmitting MAC. The options for regenerating the FCS under these circumstances are discussed in Annex F of IEEE Std 802.1D [B1].

The echannel_identifier parameter carries the E-CID.

The ingress_echannel_identifier carries the E-CID of the E-channel over which a frame was received.

6.10.2 Status Parameters

The PEISS also makes available the MAC_Enabled and MAC_Operational status parameters that reflect the operational state and administrative controls over each instance of the service provided. The values of these parameters are mapped directly from the values made available by the ISS (6.6.2 of IEEE Std 802.1Q).

Documents
Document Sharing Hub
Authorized licensed use limited to: Tsinghua University. Downloaded on February 26,2026 at 08:07:53 UTC from IEEE Xplore. Restrictions apply.
© IEEE 2012 – All rights reserved
Full document details: ISO/IEC/IEEE 8802-1BR-2016

6.10.3 Point-to-point parameters

The PEISS also makes available the operPointToPointMAC and adminPointToPointMAC status parameters that reflect the point-to-point status of each instance of the service provided and provide administrative control over the use of that information. The values of these parameters are mapped directly from the values made available by the ISS (6.6.3 of IEEE Std 802.1Q).

6.10.4 Support of the PEISS

The PEISS is supported by E-TAG (7.5) insertion and removal functions that in turn use the ISS (6.6 and 6.7 of IEEE Std 802.1Q).

Each Extended and Cascade Port shall support a PCID value that provides the default E-CID value for that Port.

Each Extended and Cascade Port of an aggregating External Bridge Port Extender shall support a useDefault Boolean. This value indicates whether or not the aggregating Bridge Port Extender is to provide the extension bits of the E-CID.

6.10.5 Data indications

On receipt of an M_UNITDATA.indication primitive from the ISS, the indication is discarded if all of the following are true:

a) The Port is a Cascade Port;

b) The initial octets of the mac_service_data_unit contain a valid E-TAG header (7.5); and

c) The E-CID value within the header is zero or 0x3F FFFF.

Otherwise a PEM_UNITDATA.indication primitive is invoked, with parameter values determined as follows:

The destination_address, source_address, and frame_check_sequence parameters carry values equal to the corresponding parameters in the received data indication. The values of the remaining parameters are affected by the contents of the E-TAG if present.

The value of the mac_service_data_unit parameter is as follows:

d) If the frame contains an E-TAG then the value used is equal to the value of the received mac_service_data_unit following removal of the E-TAG; otherwise,

e) The value used is equal to the value of the received mac_service_data_unit.

The value of the echannel_identifier parameter is as follows:

f) If the mac_service_data_unit contains an E-TAG and the Port is a Cascade Port of an external aggregating Bridge Port Extender and useDefault is FALSE, the value decoded as specified in 7.5.2; otherwise

g) If the mac_service_data_unit contains an E-TAG and the Port is a Cascade Port of an external aggregating Bridge Port Extender and useDefault is TRUE, the value decoded as specified in 7.5.2 except that extension bits of the echannel_identifier shall be set to the extension bits of the PCID; otherwise

Documents
Document Sharing Hub

Authorized licensed use limited to: Tsinghua University. Downloaded on February 26,2026 at 08:07:53 UTC from IEEE Xplore. Restrictions apply.
© IEEE 2012 – All rights reserved
Full document details: ISO/IEC/IEEE 8802-1BR-2016

h) If the mac_service_data_unit contains an E-TAG, and the Port is a Cascade Port or and Upstream Port of an external base Bridge Port Extender, the value decoded as specified in 7.5.2 except that extension bits of the echannel_identifier shall be set to zero; otherwise

i) If the connection_identifier contains a port map, the E-CID value extracted from the Remote Replication Registration Table as specified in 6.10.7; otherwise,

j) The value of the PCID for the Port.

NOTE—The connection_identifier is used to pass a Port Map across an internal LAN (6.14 of IEEE Std 802.1Q) from a C-VLAN component to a Bridge Port Extender within a Controlling Bridge for use with remote replication. Otherwise, the port map is not present in the connection_identifier.

The value of the ingress_echannel_identifier parameter is as follows:

k) If the frame contains an E-TAG, the value decoded as specified in 7.5.1; otherwise

l) If the connection_identifier contains a ingress E-CID, then that E-CID, otherwise

m) Zero.

The value of the drop_eligible and priority parameters are determined as follows:

n) If the frame contains an E-TAG, the value of the drop_eligible parameter and the received priority value are set to the DEI and Priority Code Point (PCP) values contained in the E-TAG, respectively; otherwise,

o) The received priority value and the drop_eligible parameter value are the values in the M_UNITDATA.indication.

6.10.6 Data requests

On invocation of a PEM_UNITDATA.request primitive by a user of the PEISS, if the ingress_echannel_identifier matches the PCID, the PEM_UNITDATA.request is discarded. Otherwise M_UNITDATA.request primitive is invoked, with parameter values as follows:

The destination_address, source_address, drop_eligible, and priority parameters carry values equal to the corresponding parameters in the received data request.

An E-TAG is inserted as the initial octets of the mac_service_data_unit parameter if the Port is an Upstream Port and the echannel_identifier does not match the Port's PCID. An E-TAG is inserted as the initial octets of the mac_service_data_unit parameter if the Port is a Cascade Port and if any of the following conditions are true:

a) The echannel_identifier is in the range of 0x00 0001 to 0x0F FFFF and does not match the PCID; or

b) The echannel_identifier is greater than 0x0F FFFF and the Port is in the member set of more than one E-channel whose E-CID is in the range of 0x00 0001 to 0x0F FFFF.

If an E-TAG is inserted, it shall be formatted as described in Clause 7.

NOTE—A Bridge Port Extender does not have direct knowledge if one of its Ports is operating as a Cascade Port versus an Extended Port, nor does it need to. A sufficient but not necessary condition to infer that a Port is operating as a Cascade Port is if the Port is in the member set of more than one unicast E-channel. However, a Port operating as a Cascade Port connected to a Bridge Port Extender that does not have any Extended Ports active would reside in only one such member set. An E-TAG should never be inserted on an Extended Port. Furthermore, an E-TAG is inserted on Cascade Ports except for the frames destined to the attached Bridge Port Extender (i.e., the frames on the E-channel identified by the Cascade Port PCID). Condition a) covers the Cascade Port case for unicast. Condition b) covers the multicast case for most Cascade Ports. Neither case covers a Cascade Port that is attached to a Bridge Port Extender with

Documents
Document Sharing Hub
Authorized licensed use limited to: Tsinghua University. Downloaded on February 26,2026 at 08:07:53 UTC from IEEE Xplore. Restrictions apply.
© IEEE 2012 – All rights reserved
Full document details: ISO/IEC/IEEE 8802-1BR-2016

no extended Ports. As a result, no frame will be sent to the attached Bridge Port Extender with an E-TAG, which is the desired behavior.

The ingress_echannel_identifier is set to zero if all of the following conditions are true:

c) The port is a Cascade or Extended Port of an external aggregating Bridge Port Extender;

d) useDefault is TRUE;

e) The value of echannel_identifier is greater than or equal to 0x10 0000 (i.e., a point-to-multipoint E-channel); and

f) The extension bits of the ingress_echannel_identifier do not match those of the PCID.

The values of the echannel_identifier, ingress_echannel_identifier, priority, and drop_eligible parameters are used to determine the contents of the E-TAG, in accordance with 7.5.

The remaining octets of the mac_service_data_unit parameter are those accompanying the PEM_UNITDATA.request.

If the data request is a consequence of relaying a frame and the MAC type of the Port differs from that used to receive the frame, they are modified, if necessary, in accordance with the procedures described in ISO/IEC TR 11802-5, IETF RFC 1042, and IETF RFC 1390.

The value of the frame_check_sequence parameter is determined as follows:

g) If the frame_check_sequence parameter received in the data request is either unspecified or still carries a valid value, then that value is used; otherwise,

h) The value used is either derived from the received FCS information by modification to take account of the conditions that have caused it to become invalid, or the unspecified value is used.

6.10.7 Support of remote replication by the PEISS

A remote replication registration table shall be provided within each Internal Bridge Port Extender. This table is configured by the C-VLAN component to which it is attached (8.10.1). It is used by the PEISS of the Internal Bridge Port Extender to determine the E-CID to be used for remote replication.

Each entry in the Remote Replication Registration Table shall comprise the following:

a) The E-CID of the E-channel to which the filtering information applies; and

b) A Port Map, with a control element for each outbound Port in the Replication Group. This Port Map operates as the key to identify the Remote Replication Registration Entry. Each control element may be set to *filter* or *forward*.

The PEISS uses this table to determine the E-CID and Ingress_E-CID when processing data indications (6.10.5).

6.11 Bridge Port Extender Forwarding Process

Each frame submitted to the MAC Relay Entity shall be forwarded subject to the constituent functions of the Forwarding Process (Figure 6-8). Each function is described in terms of the action taken for a given frame received on a given Port (termed “the reception Port”). The frame can be forwarded for transmission on some Ports (termed “transmission Ports”) and discarded without being transmitted at the other Ports.

Documents
Document Sharing Hub

Authorized licensed use limited to: Tsinghua University. Downloaded on February 26,2026 at 08:07:53 UTC from IEEE Xplore. Restrictions apply.
© IEEE 2012 – All rights reserved
Full document details: ISO/IEC/IEEE 8802-1BR-2016