INTERNATIONAL STANDARD

ISO/IEC/IEEE 8802-22

Second edition
2022-06

Telecommunications and information exchange between systems — Wireless Regional Area Networks (WRAN) — Specific requirements —

Part 22: Cognitive Wireless RAN Medium Access Control (MAC) and Physical Layer (PHY) Specifications: Policies and procedures for operation in the bands that allow spectrum sharing where the communications devices may opportunistically operate in the spectrum of primary service

Télécommunications et échange d'information entre systèmes — Réseaux régionaux sans fil (WRAN) — Exigences spécifiques —

Partie 22: Spécifications du contrôle d'accès du milieu sans fil cognitif (MAC) et de la couche physique (PHY) : Politiques et procédures pour le fonctionnement dans les bandes qui permettent le partage du spectre, où les dispositifs de communication peuvent fonctionner de manière opportuniste dans le spectre du service primaire

Reference number
ISO/IEC/IEEE 8802-22:2022(E)

© IEEE 2020

Authorized licensed use limited to: Tsinghua University. Downloaded on February 26,2026 at 08:39:27 UTC from IEEE Xplore. Restrictions apply.

Full document details: ISO/IEC/IEEE 8802-22-2021

COPYRIGHT PROTECTED DOCUMENT

© IEEE 2020

All rights reserved. Unless otherwise specified, or required in the context of its implementation, no part of this publication may be reproduced or utilized otherwise in any form or by any means, electronic or mechanical, including photocopying, or posting on the internet or an intranet, without prior written permission. Permission can be requested from IEEE at the address below.

Institute of Electrical and Electronics Engineers, Inc
3 Park Avenue, New York
NY 10016-5997, USA

Email: stds.ipr@ieee.org
Website: www.ieee.org

Published in Switzerland

© IEEE 2020 – All rights reserved
Authorized licensed use limited to: Tsinghua University. Downloaded on February 26,2026 at 08:39:27 UTC from IEEE Xplore. Restrictions apply.

Documents
Document Sharing Hub

Full document details: ISO/IEC/IEEE 8802-22-2021

Foreword

ISO (the International Organization for Standardization) and IEC (the International Electrotechnical Commission) form the specialized system for worldwide standardization. National bodies that are members of ISO or IEC participate in the development of International Standards through technical committees established by the respective organization to deal with particular fields of technical activity. ISO and IEC technical committees collaborate in fields of mutual interest. Other international organizations, governmental and non-governmental, in liaison with ISO and IEC, also take part in the work.

The procedures used to develop this document and those intended for its further maintenance are described in the ISO/IEC Directives, Part 1. In particular, the different approval criteria needed for the different types of ISO/IEC documents should be noted. This document was drafted in accordance with the editorial rules of the ISO/IEC Directives, Part 2 (see www.iso.org/directives or www.iec.ch/members_experts/refdocs).

IEEE Standards documents are developed within the IEEE Societies and the Standards Coordinating Committees of the IEEE Standards Association (IEEE-SA) Standards Board. The IEEE develops its standards through a consensus development process, approved by the American National Standards Institute, which brings together volunteers representing varied viewpoints and interests to achieve the final product. Volunteers are not necessarily members of the Institute and serve without compensation. While the IEEE administers the process and establishes rules to promote fairness in the consensus development process, the IEEE does not independently evaluate, test, or verify the accuracy of any of the information contained in its standards.

Attention is drawn to the possibility that some of the elements of this document may be the subject of patent rights. ISO and IEC shall not be held responsible for identifying any or all such patent rights. Details of any patent rights identified during the development of the document will be in the Introduction and/or on the ISO list of patent declarations received (see www.iso.org/patents) or the IEC list of patent declarations received (see patents.iec.ch).

Any trade name used in this document is information given for the convenience of users and does not constitute an endorsement.

For an explanation of the voluntary nature of standards, the meaning of ISO specific terms and expressions related to conformity assessment, as well as information about ISO's adherence to the World Trade Organization (WTO) principles in the Technical Barriers to Trade (TBT), see www.iso.org/iso/foreword.html. In the IEC, see www.iec.ch/understanding-standards.

ISO/IEC/IEEE 8802-22 was prepared by the LAN/MAN of the IEEE Computer Society (as IEEE Std 802.22-2019) and drafted in accordance with its editorial rules. It was adopted, under the “fast-track procedure” defined in the Partner Standards Development Organization cooperation agreement between ISO and IEEE, by Joint Technical Committee ISO/IEC JTC 1, *Information technology*, Subcommittee SC 6, *Telecommunications and information exchange between systems*.

This second edition cancels and replaces the first edition (ISO/IEC/IEEE 8802-22:2015), which has been technically revised.

A list of all parts in the ISO/IEC/IEEE 8802 series can be found on the ISO and IEC websites.

Any feedback or questions on this document should be directed to the user’s national standards body. A complete listing of these bodies can be found at www.iso.org/members.html and www.iec.ch/national-committees.

© IEEE 2020 – All rights reserved

Authorized licensed use limited to: Tsinghua University. Downloaded on February 26,2026 at 08:39:27 UTC from IEEE Xplore. Restrictions apply.

Full document details: ISO/IEC/IEEE 8802-22-2021

Abstract: This standard specifies the air interface, including the cognitive medium access control layer (MAC) and physical layer (PHY), of point–to–multipoint wireless regional area networks (WRANs) comprised of a professional fixed base station (BS) with fixed and portable user terminals operating in the VHF/UHF TV broadcast bands between 54 MHz to 862 MHz, and potentially in the 1300 MHz to 1750 MHz, and 2700 MHz to 3700 MHz bands provided the regulatory regime allows it.

Keywords: broadband wireless access network, cognitive radio, fixed user terminals, IEEE 802.22™, portable user terminals, radio spectrum sensing, regional area network, WRAN standards

The Institute of Electrical and Electronics Engineers, Inc.
3 Park Avenue, New York, NY 10016-5997, USA

Copyright © 2020 by The Institute of Electrical and Electronics Engineers, Inc.
All rights reserved. Published 5 May 2020. Printed in the United States of America.

IEEE and 802 are registered trademarks in the U.S. Patent & Trademark Office, owned by The Institute of Electrical and Electronics Engineers, Incorporated.

Print: ISBN 978-1-5044-6148-1 STDPD23878
PDF: ISBN 978-1-5044-6147-4 STD23878

IEEE prohibits discrimination, harassment, and bullying.
For more information, visit http://www.ieee.org/web/aboutus/whatis/policies/p9-26.html.
No part of this publication may be reproduced in any form, in an electronic retrieval system or otherwise, without the prior written permission of the publisher.

Copyright © 2020 IEEE. All rights reserved.

Documents
Document Sharing Hub

Authorized licensed use limited to: Tsinghua University. Downloaded on February 26,2026 at 08:39:27 UTC from IEEE Xplore. Restrictions apply.

Full document details: ISO/IEC/IEEE 8802-22-2021

Important Notices and Disclaimers Concerning IEEE Standards Documents

IEEE documents are made available for use subject to important notices and legal disclaimers. These notices and disclaimers, or a reference to this page, appear in all standards and may be found under the heading "Important Notices and Disclaimers Concerning IEEE Standards Documents." They can also be obtained on request from IEEE or viewed at http://standards.ieee.org/ipr/disclaimers.html.

Notice and Disclaimer of Liability Concerning the Use of IEEE Standards Documents

IEEE Standards documents (standards, recommended practices, and guides), both full-use and trial-use, are developed within IEEE Societies and the Standards Coordinating Committees of the IEEE Standards Association ("IEEE SA") Standards Board. IEEE ("the Institute") develops its standards through a consensus development process, approved by the American National Standards Institute ("ANSI"), which brings together volunteers representing varied viewpoints and interests to achieve the final product. IEEE Standards are documents developed through scientific, academic, and industry-based technical working groups. Volunteers in IEEE working groups are not necessarily members of the Institute and participate without compensation from IEEE. While IEEE administers the process and establishes rules to promote fairness in the consensus development process, IEEE does not independently evaluate, test, or verify the accuracy of any of the information or the soundness of any judgments contained in its standards.

IEEE Standards do not guarantee or ensure safety, security, health, or environmental protection, or ensure against interference with or from other devices or networks. Implementers and users of IEEE Standards documents are responsible for determining and complying with all appropriate safety, security, environmental, health, and interference protection practices and all applicable laws and regulations.

IEEE does not warrant or represent the accuracy or content of the material contained in its standards, and expressly disclaims all warranties (express, implied and statutory) not included in this or any other document relating to the standard, including, but not limited to, the warranties of: merchantability; fitness for a particular purpose; non-infringement; and quality, accuracy, effectiveness, currency, or completeness of material. In addition, IEEE disclaims any and all conditions relating to: results; and workmanlike effort. IEEE standards documents are supplied "AS IS" and "WITH ALL FAULTS."

Use of an IEEE standard is wholly voluntary. The existence of an IEEE standard does not imply that there are no other ways to produce, test, measure, purchase, market, or provide other goods and services related to the scope of the IEEE standard. Furthermore, the viewpoint expressed at the time a standard is approved and issued is subject to change brought about through developments in the state of the art and comments received from users of the standard.

In publishing and making its standards available, IEEE is not suggesting or rendering professional or other services for, or on behalf of, any person or entity nor is IEEE undertaking to perform any duty owed by any other person or entity to another. Any person utilizing any IEEE Standards document, should rely upon his or her own independent judgment in the exercise of reasonable care in any given circumstances or, as appropriate, seek the advice of a competent professional in determining the appropriateness of a given IEEE standard.

IN NO EVENT SHALL IEEE BE LIABLE FOR ANY DIRECT, INDIRECT, INCIDENTAL, SPECIAL, EXEMPLARY, OR CONSEQUENTIAL DAMAGES (INCLUDING, BUT NOT LIMITED TO: PROCUREMENT OF SUBSTITUTE GOODS OR SERVICES; LOSS OF USE, DATA, OR PROFITS; OR BUSINESS INTERRUPTION) HOWEVER CAUSED AND ON ANY THEORY OF LIABILITY, WHETHER IN CONTRACT, STRICT LIABILITY, OR TORT (INCLUDING NEGLIGENCE OR OTHERWISE) ARISING IN ANY WAY OUT OF THE PUBLICATION, USE OF, OR RELIANCE UPON ANY STANDARD, EVEN IF ADVISED OF THE POSSIBILITY OF SUCH DAMAGE AND REGARDLESS OF WHETHER SUCH DAMAGE WAS FORESEEABLE.

Copyright © 2020 IEEE. All rights reserved.

Documents
Document Sharing Hub

Authorized licensed use limited to: Tsinghua University. Downloaded on February 26,2026 at 08:39:27 UTC from IEEE Xplore. Restrictions apply.

Full document details: ISO/IEC/IEEE 8802-22-2021

Translations

The IEEE consensus development process involves the review of documents in English only. In the event that an IEEE standard is translated, only the English version published by IEEE should be considered the approved IEEE standard.

Official statements

A statement, written or oral, that is not processed in accordance with the IEEE SA Standards Board Operations Manual shall not be considered or inferred to be the official position of IEEE or any of its committees and shall not be considered to be, or be relied upon as, a formal position of IEEE. At lectures, symposia, seminars, or educational courses, an individual presenting information on IEEE standards shall make it clear that his or her views should be considered the personal views of that individual rather than the formal position of IEEE.

Comments on standards

Comments for revision of IEEE Standards documents are welcome from any interested party, regardless of membership affiliation with IEEE. However, IEEE does not provide consulting information or advice pertaining to IEEE Standards documents. Suggestions for changes in documents should be in the form of a proposed change of text, together with appropriate supporting comments. Since IEEE standards represent a consensus of concerned interests, it is important that any responses to comments and questions also receive the concurrence of a balance of interests. For this reason, IEEE and the members of its societies and Standards Coordinating Committees are not able to provide an instant response to comments or questions except in those cases where the matter has previously been addressed. For the same reason, IEEE does not respond to interpretation requests. Any person who would like to participate in revisions to an IEEE standard is welcome to join the relevant IEEE working group.

Comments on standards should be submitted to the following address:

Secretary, IEEE SA Standards Board
445 Hoes Lane
Piscataway, NJ 08854 USA

Laws and regulations

Users of IEEE Standards documents should consult all applicable laws and regulations. Compliance with the provisions of any IEEE Standards document does not imply compliance to any applicable regulatory requirements. Implementers of the standard are responsible for observing or referring to the applicable regulatory requirements. IEEE does not, by the publication of its standards, intend to urge action that is not in compliance with applicable laws, and these documents may not be construed as doing so.

Copyrights

IEEE draft and approved standards are copyrighted by IEEE under US and international copyright laws. They are made available by IEEE and are adopted for a wide variety of both public and private uses. These include both use, by reference, in laws and regulations, and use in private self-regulation, standardization, and the promotion of engineering practices and methods. By making these documents available for use and adoption by public authorities and private users, IEEE does not waive any rights in copyright to the documents.

Copyright © 2020 IEEE. All rights reserved.

Documents
Document Sharing Hub

Authorized licensed use limited to: Tsinghua University. Downloaded on February 26,2026 at 08:39:27 UTC from IEEE Xplore. Restrictions apply.

Full document details: ISO/IEC/IEEE 8802-22-2021

Photocopies

Subject to payment of the appropriate fee, IEEE will grant users a limited, non-exclusive license to photocopy portions of any individual standard for company or organizational internal use or individual, non-commercial use only. To arrange for payment of licensing fees, please contact Copyright Clearance Center, Customer Service, 222 Rosewood Drive, Danvers, MA 01923 USA; +1 978 750 8400. Permission to photocopy portions of any individual standard for educational classroom use can also be obtained through the Copyright Clearance Center.

Updating of IEEE Standards documents

Users of IEEE Standards documents should be aware that these documents may be superseded at any time by the issuance of new editions or may be amended from time to time through the issuance of amendments, corrigenda, or errata. An official IEEE document at any point in time consists of the current edition of the document together with any amendments, corrigenda, or errata then in effect.

Every IEEE standard is subjected to review at least every 10 years. When a document is more than 10 years old and has not undergone a revision process, it is reasonable to conclude that its contents, although still of some value, do not wholly reflect the present state of the art. Users are cautioned to check to determine that they have the latest edition of any IEEE standard.

In order to determine whether a given document is the current edition and whether it has been amended through the issuance of amendments, corrigenda, or errata, visit IEEE Xplore at http://ieeexplore.ieee.org/ or contact IEEE at the address listed previously. For more information about the IEEE SA or IEEE's standards development process, visit the IEEE SA Website at http://standards.ieee.org.

Errata

Errata, if any, for IEEE standards can be accessed via https://standards.ieee.org/standard/index.html. Search for standard number and year of approval to access the web page of the published standard. Errata links are located under the Additional Resources Details section. Errata are also available in IEEE Xplore: https://ieeexplore.ieee.org/browse/standards/collection/ieee/. Users are encouraged to periodically check for errata.

Patents

Attention is called to the possibility that implementation of this standard may require use of subject matter covered by patent rights. By publication of this standard, no position is taken by the IEEE with respect to the existence or validity of any patent rights in connection therewith. If a patent holder or patent applicant has filed a statement of assurance via an Accepted Letter of Assurance, then the statement is listed on the IEEE SA Website at https://standards.ieee.org/about/sasb/patcom/patents.html. Letters of Assurance may indicate whether the Submitter is willing or unwilling to grant licenses under patent rights without compensation or under reasonable rates, with reasonable terms and conditions that are demonstrably free of any unfair discrimination to applicants desiring to obtain such licenses.

Essential Patent Claims may exist for which a Letter of Assurance has not been received. The IEEE is not responsible for identifying Essential Patent Claims for which a license may be required, for conducting inquiries into the legal validity or scope of Patents Claims, or determining whether any licensing terms or conditions provided in connection with submission of a Letter of Assurance, if any, or in any licensing agreements are reasonable or non-discriminatory. Users of this standard are expressly advised that determination of the validity of any patent rights, and the risk of infringement of such rights, is entirely their own responsibility. Further information may be obtained from the IEEE Standards Association.

Copyright © 2020 IEEE. All rights reserved.

Documents
Document Sharing Hub

Authorized licensed use limited to: Tsinghua University. Downloaded on February 26,2026 at 08:39:27 UTC from IEEE Xplore. Restrictions apply.

Full document details: ISO/IEC/IEEE 8802-22-2021

Participants

The following is a list of participants in the Wireless Regional Area Networks Working Group:

Apurva N. Mody, *Chair*
Oliver Holland, *Vice Chair*
Ranga K. Reddy, *Lead Editor*

Subir Das
Robert F. Heile
Gianfranco Miele
Paul Nikolich
Steve Shellhammer

Historical participants

At the time this standard was submitted to the IEEE SA for approval, the following voting members had participated in the IEEE P802.22 Working Group until December 2011:

Apurva N. Mody, *Chair*
Gerald Chouinard, *Vice Chair and Lead Editor*

Kyu Hwan An
Chee Wei Ang
Kwok Shum Au
Mark Austin
Anuj Batra
John Benko
Robert Berger
Dagnachew Birru
Scott Blue
Monique Bourgeois Brown
Gregory Buchwald
Winston Caldwell
Ed Callaway
Dave Cavalcanti
Kiran Challapali
Soo-Young Chang
Remi Chayer
Shiuh Yuan Chen
Tao Chen
Jinxia Cheng
Aik Chindapol
InHwan Choi
Liwen Chu
Joon–Hwa Chun
Chris Clanton
Charles Cook
Charles Cooper
Carlos Cordeiro
Subir Das
W. Carl Day
Upkar Dhaliwal
Johnny Dixon
Peter Ecclesine
Charles Einolf
Michael Fischer
Wen Gao
Ingo Gaspard
Monisha Ghosh
Joanna Guenin
Jin Guo
Thomas Gurley
JaeSong Han
Hiroshi Harada
Ahren Hartman
Robert F. Heile
Anh Twan Hoang
Michael Hoghooghi
Mark Hopkins
Victor Hou
Wendong Hu
Junhong Hui
Duckdong Hwang
Sung Hyun Hwang
Tae–In Hyon
Yutaka Ikeda
Soon Ik Jeon
Baowei Ji
Ravi Kalavakunta
Jerome J. Kalke
Bub-Joo Kang
Mark Kelley
Ramon Khalona
Thomas Kiernan
Byoung–Jo Kim
Chang-Joo Kim
HakSun Kim
Kihong Kim
Sangbum Kim
Gwangzeen Ko
Tom Kolze
Bruce Kraemer
Steve Kuffner
Denis Kuwahara
Chang-Ho Lee
Geunho Lee
Haeyoung Lee
Jeong Suk Lee
Zhongding Lei
Wing Seng Leon
Barry Lewis
Lingjie Li
Ying-Chang Liang
Euntack Lim
Kyutae Lim
Jiezhen Lin
Hang Liu
Jinnan Liu
Michael Lynch
Steve Mace
David Magee
Ben Manny
David Mazzarese
Tony Morella
Peter Murray
Max Muterspaugh
Mullaguru Naidu
Paul Nikolich
John Notor
Moh Nouroozian
Seungmok Oh
Barry O'Mahony
Ashish Pandharipande
Juha Pihlaja
Patrick Pirat
Ron Porat

Copyright © 2020 IEEE. All rights reserved.

Documents
Document Sharing Hub
Authorized licensed use limited to: Tsinghua University. Downloaded on February 26,2026 at 08:39:27 UTC from IEEE Xplore. Restrictions apply.
Full document details: ISO/IEC/IEEE 8802-22-2021

Jeff Poston
Jim Raab
Mohammad Rahman
Ranga K. Reddy
Ivan Reede
Edgar Reihl
Jon Walter Rosdahl
William Rose
Luis Escobar Sanz
Shigenobu Sasaki
Jeffrey Schiffer
Chris Seagren
Alireza Seyedi
Cheng Shan
Steve Shellhammer
Dave Silk
Kirk Skeba
Douglas Smith
Eli Sofer
Myung Sun Song
Srikathyayani Srikanteswara
Jayne Stancavage
Carl Stevenson
William Stiles
Hideki Tanaka
Clifford Tavares
Victor Tawil
Shawn Taylor
Paul Thompson
James Tomcik
JungSun Um
George Vlantis
Lei Wang
Jianfeng Wang
Yunbiao Wang
Tom Wasilewski
Alfred Wieczorek
Kelly Williams
Yuchun Wu
Shiquan WuBo Xia
Changlong Xu
ShanShan Xu
Steve Yao
Yonghong Zeng
Jianwei Zhang
Xin Zhang

Major contributions to this standard were made by the following individuals:

Kwok Shum Au
John Benko
Winston Caldwell
Dave Cavalcanti
Soo-Young Chang
Gerald Chouinard
Carlos Cordeiro
Charles Einolf
Wen Gao
Monisha Ghosh
Thomas Gurley
Anh Twan Hoang
Wendong Hu
Sung Hyun Hwang
Jerome J. Kalke
Ramon Khalona
Thomas Kiernan
Kak-Sun Kim
Kihong Kim
Sangbum Kim
Gwangzeen Ko
Steve Kuffner
Zhongding Lei
Lingjie Li
Kyutae Lim
Jinnan Liu
David Mazzarese
Apurva N. Mody
Peter Murray
Mogh Nouroozian
Ashish Pandharipande
Patrick Pirat
Mohammad Rahman
Ranga K. Reddy
Ivan Reede
Shigenobu Sasaki
Cheng Shan
Steve Shellhammer
Eli Sofer
Carl Stevenson
Victor Tawil
JungSun Um
George Vlantis
Jianfeng Wang
Yonghong Zeng

The following members participated and voted on the development of IEEE Std 802.22a™-2014:

Apurva N. Mody, *Chair*
Chang-woo Pyo, *Vice Chair*

When this amendment was sent to sponsor ballot, the Task Group a had the following membership:

Ranga K. Reddy, *Chair and Editor*

Winston Caldwell
Charles Einolf
Peter Flynn
Tom Gurley
Hiroshi Harada
Robert F. Heile
Byng Jeong Jang
Jerry Kalke
Hynduk Kang
Gwangzeen Ko
Bruce Kraemer
Donghun Lee
Liru Lu
Michael Lynch
Paul Nikolich
Shigenobu Sasaki
Steven Shellhammer
Chunyi Song
Victor Tawil
Keat-Beng Toh
Junyi Wang
Bing Xuan Zhao
Xin (Amy) Zhang

Copyright © 2020 IEEE. All rights reserved.

Documents
Document Sharing Hub

Authorized licensed use limited to: Tsinghua University. Downloaded on February 26,2026 at 08:39:27 UTC from IEEE Xplore. Restrictions apply.

Full document details: ISO/IEC/IEEE 8802-22-2021

Major contributions were received from the following individuals:

Gerald Chouinard
Charles Einolf
Sunghyun Hwang
Gwangzeen Ko
Chang-woo Pyo
Ranga K. Reddy
Ivan Reede

The following members participated and voted on the development of IEEE Std 802.22b™-2015:

Apurva N. Mody, *Chair*
Chang–woo Pyo, *Vice Chair*

When this amendment was sent to sponsor ballot, the Task Group b had the following membership:

Chang–woo Pyo, *Chair and Editor*
Sung Hyun Hwang, *Vice Chair*
Gabriel Villardi, *Secretary*

Gregory Buchwald
Winston Caldwell
Gerald Chouinard
Subir Das
Peter Flynn
Thomas Gurley
Hiroshi Harada
Robert F. Heile
Dien Hoang
Byung Jang Jeong
Jerome J. Kalke
Hynduk Kang
Gwangzeen Ko
Bruce Kraemer
Donghun Lee
PinHsun Lin
Liru Lu
Michael Lynch
Apurva N. Mody
Paul Nikolich
Masayuki Oodo
Ranga K. Reddy
Ivan Reede
Shigenobu Sasaki
Steve Shellhammer
Chunyi Song
Keat–Beng Toh
Xin (Amy) Zhang
Bing Xuan Zhao
Lei Zhongding

The following members of the individual balloting committee voted on this standard. Balloters may have voted for approval, disapproval, or abstention.

Thomas Alexander
Richard Alfvin
Amelia Andersdotter
Butch Anton
Stefan Aust
Harry Bims
Kenneth Bow
Nancy Bravin
Vern Brethour
Demetrio Bucaneg Jr.
William Byrd
C. Caicedo Bastidas
Paul Cardinal
Juan Carreon
Pin Chang
Todor Cooklev
Alistair Duffy
Michael Fischer
Avraham Freedman
Zhigang Gong
Randall Groves
Robert F. Heile
Marco Hernandez
Werner Hoelzl
Atsushi Ito
Raj Jain
SangKwon Jeong
Pranav Jha
Jerome Kalke
Piotr Karocki
Stuart Kerry
Evgeny Khorov
Yongbum Kim
Jan Kruys
Thomas Kurihara
Alexander Lackpour
Hyeong Ho Lee
Michael Lynch
Bruce Mackie
Jeffery Masters
Stephen McCann
Apurva N. Mody
Ronald Murias
Charles Ngethe
Nick S. A. Nikjoo
Paul Nikolich
Bansi Patel
Walter Pienciak
Clinton Powell
Venkatesha Prasad
R. K. Rannow
Ranga K. Reddy
Maximilian Riegel
Naotaka Sato
Thomas Starai
Walter Struppler
David Tepen
David Thompson
Mark–Rene Uchida
Lisa Ward
Scott Willy
Andreas Wolf
Oren Yuen

Copyright © 2020 IEEE. All rights reserved.

Documents
Document Sharing Hub

Authorized licensed use limited to: Tsinghua University. Downloaded on February 26,2026 at 08:39:27 UTC from IEEE Xplore. Restrictions apply.

Full document details: ISO/IEC/IEEE 8802-22-2021

When the IEEE SA Standards Board approved this standard on 5 September 2019, it had the following membership:

Gary Hoffman, *Chair*
Ted Burse, *Vice Chair*
Jean-Philippe Faure, *Past Chair*
Konstantinos Karachalios, *Secretary*

Masayuki Ariyoshi
Stephen D. Dukes
J. Travis Griffith
Guido Hiertz
Christel Hunter
Joseph L. Koepfinger*
Thomas Koshy
John D. Kulick
David J. Law
Joseph Levy
Howard Li
Xiaohui Liu
Kevin Lu
Daleep Mohla
Andrew Myles
Annette D. Reilly
Dorothy Stanley
Sha Wei
Phil Wennblom
Philip Winston
Howard Wolfman
Feng Wu
Jingyi Zhou

*Member Emeritus

Copyright © 2020 IEEE. All rights reserved.

Documents
Document Sharing Hub

Authorized licensed use limited to: Tsinghua University. Downloaded on February 26,2026 at 08:39:27 UTC from IEEE Xplore. Restrictions apply.

Full document details: ISO/IEC/IEEE 8802-22-2021

Introduction

This introduction is not part of IEEE Std 802.22–2019, IEEE Standard for Information Technology—Telecommunications and information exchange between systems—Wireless Regional Area Networks (WRAN) Specific requirements—Part 22: Cognitive Wireless RAN Medium Access Control (MAC) and Physical Layer (PHY) Specifications: Policies and Procedures for Operation in the Bands that Allow Spectrum Sharing where the Communications Devices May Opportunistically Operate in the Spectrum of Primary Service.

This standard specifies the air interface, including the cognitive radio MAC and PHY, of point-to-multipoint and backhaul WRANs comprised of a professional fixed BS with fixed and portable user terminals. The standard specifies operation in the bands that allow spectrum sharing where the communications devices may opportunistically operate in the spectrum of the primary service, such as the VHF/UHF TV broadcast bands between 54 MHz to 862 MHz, and the 1300 MHz to 1750 MHz and 2700 MHz to 3700 MHz bands provided the regulatory regime allows it.

Copyright © 2020 IEEE. All rights reserved.

Documents
Document Sharing Hub

Authorized licensed use limited to: Tsinghua University. Downloaded on February 26,2026 at 08:39:27 UTC from IEEE Xplore. Restrictions apply.

Full document details: ISO/IEC/IEEE 8802-22-2021

Contents

1. Overview ... 15

1.1 Scope ... 15
1.2 Purpose ... 15
1.3 Introduction ... 16
1.4 Word usage ... 19

2. Normative references ... 20

3. Definitions ... 22

4. Abbreviations and acronyms ... 30

5. System architecture ... 36

5.1 Reference architecture ... 36
5.2 Management reference architecture ... 40

6. Packet Convergence sublayer ... 44

6.1 MAC SDU format ... 44
6.2 Classification ... 44
6.3 IEEE 802.3/Ethernet-specific part ... 46
6.4 IP specific part ... 47

7. MAC Common Part sublayer ... 48

7.1 General ... 48
7.2 Addressing and connections ... 49
7.3 General superframe structure ... 50
7.4 General frame structure (on PHY-OM1) ... 52
7.5 General frame structure (on PHY-OM2) ... 55
7.6 General frame structure for a relay network ... 59
7.7 Control headers ... 66
7.8 MAC PDU formats ... 76
7.9 Management messages ... 92
7.10 Management of MAC PDUs ... 220
7.11 ARQ mechanism ... 240
7.12 Scheduling services ... 253
7.13 Bandwidth management ... 256
7.14 PHY support ... 262
7.15 Contention resolution ... 264
7.16 Initialization and network association ... 266
7.17 Ranging ... 312
7.18 Channel descriptor management ... 326
7.19 Multicast support ... 328
7.20 Quality of service ... 331
7.21 Incumbent protection ... 372
7.22 Self-coexistence ... 382
7.23 Quiet periods and sensing ... 400
7.24 Channel management ... 412

Copyright © 2020 IEEE. All rights reserved.

Documents
Document Sharing Hub

Authorized licensed use limited to: Tsinghua University. Downloaded on February 26,2026 at 08:39:27 UTC from IEEE Xplore. Restrictions apply.

Full document details: ISO/IEC/IEEE 8802-22-2021

7.25 Synchronization of the IEEE 802.22 WRAN BSs and IEEE 802.22 A-BSs 417
7.26 Multi-channel operation on PHY-OM2 417
7.27 Group Resource Allocation on PHY-OM2 437

8. Security mechanism in IEEE 802.22 441

8.1 Security Architecture for the Data/Control and Management Planes 442
8.2 SCM protocol 444
8.3 Key usage 471
8.4 Cryptographic methods 475
8.5 Certificate profile 482
8.6 Security sublayer 2—Security mechanisms for the cognitive functions 490
8.7 CPE privacy 503

9. Operation Mode 1 (PHY-OM1) 504

9.1 Symbol description 505
9.2 Data rates 508
9.3 Functional block diagram applicable to the PHY layer 509
9.4 Superframe and frame structures 510
9.5 CBP packet format 518
9.6 OFDM subcarrier allocation 520
9.7 Channel coding 528
9.8 Constellation mapping and modulation 550
9.9 Control mechanisms 554
9.10 Network synchronization 561
9.11 Frequency Control requirements 562
9.12 Antenna 562
9.13 RF mask 567
9.14 Receiver requirements 568
9.15 Multiple-input, multiple-output (MIMO) 569
9.16 Using PHY-OM1 in non-TV whitespace frequency bands 577

10. PHY Operation Mode 2 (PHY-OM2) 578

10.1 Symbol description 578
10.2 Data rates 585
10.3 Functional block diagram applicable to the PHY 598
10.4 Frame structure 599
10.5 CBP packet format 603
10.6 OFDM subcarrier allocation 603
10.7 Channel coding 612
10.8 Constellation mapping and modulation 619
10.9 Control mechanisms 623
10.10 Network synchronization 628
10.11 Frequency control requirements 628
10.12 Antenna 628
10.13 RF mask 628
10.14 Receiver requirements 629
10.15 MIMO pilot allocation 629
10.16 Using PHY-OM2 in non-TV Whitespace Frequency Bands 631

Copyright © 2020 IEEE. All rights reserved.

Documents
Document Sharing Hub

Authorized licensed use limited to: Tsinghua University. Downloaded on February 26,2026 at 08:39:27 UTC from IEEE Xplore. Restrictions apply.

Full document details: ISO/IEC/IEEE 8802-22-2021

11. Cognitive radio capability ... 632

11.1 General ... 632
11.2 Spectrum Manager operation ... 633
11.3 Spectrum Sensing Automaton ... 659
11.4 Spectrum sensing ... 672
11.5 Geolocation ... 685
11.6 Database service ... 690
11.7 Operation in non-TV white-space bands ... 691

12. Configuration ... 692

13. Parameters and connection management ... 693

13.1 Parameters, timers, message IEs ... 693
13.2 Well-known CIDs ... 705
13.3 ARQ parameters ... 709

14. MIB structure ... 710

14.1 MIB description ... 710
14.2 MIB module definitions (ASN.1) ... 832

15. Management plane interfaces and procedures ... 1230

15.1 Primitive format ... 1230
15.2 Primitive definitions ... 1231

Annex A (normative) IEEE 802.22 regulatory domains and regulatory classes requirements ... 1336

A.1 Regulatory domains, regulatory classes, and professional installation ... 1336
A.2 Radio performance requirements ... 1338
A.3 Channel availability and sensing requirements ... 1343
A.4 Device identification requirements ... 1350
A.5 Channelization based on the regulatory domain ... 1351
A.6 Example of the regulatory framework in the UK ... 1355

Annex B (informative) Multicarrier fine ranging method ... 1359

B.1 General description ... 1359
B.2 Practical embodiment of the proposed multicarrier fine ranging method ... 1365
B.3 References ... 1367

Annex C (informative) Sensing ... 1368

C.1 Blind sensing techniques ... 1368
C.2 Signal specific sensing techniques ... 1377
C.3 References ... 1421

Annex D (informative) Summary of the characteristics of the IEEE 802.22.1 beacon signal and protocols ... 1423

D.1 General ... 1423
D.2 Superframe structure ... 1423

Copyright © 2020 IEEE. All rights reserved.

Documents
Document Sharing Hub

Authorized licensed use limited to: Tsinghua University. Downloaded on February 26,2026 at 08:39:27 UTC from IEEE Xplore. Restrictions apply.

Full document details: ISO/IEC/IEEE 8802-22-2021

D.3 Beacon frame structure 1424
D.4 Synchronization burst 1425
D.5 Inter-device communication period (ICP) 1426
D.6 PHY specifications 1426
D.7 Reference architecture for the WRAN receiver 1427
D.8 Sensing and detection at the WRAN receiver 1429
D.9 Options for detecting the IEEE 802.22.1 beacon signal 1438
D.10 Operation scenarios for the coexistence of IEEE 802.22.1 and IEEE 802.22 1440
D.11 References 1441

Annex E (informative) Distributed spectrum sensing and authentication to provide protection against thermal noise 1442

Annex F (informative) Network security aspects 1447

F.1 Availability 1447
F.2 Authentication 1447
F.3 Authorization 1447
F.4 Identification 1448
F.5 Integrity 1448
F.6 Confidentiality/Privacy 1448

Annex G (informative) Multiple-input, multiple-output (MIMO)—Receiver side implementation 1450

G.1 Overview 1450

Annex H (informative) Bibliography 1460

Copyright © 2020 IEEE. All rights reserved.

Documents
Document Sharing Hub

Authorized licensed use limited to: Tsinghua University. Downloaded on February 26,2026 at 08:39:27 UTC from IEEE Xplore. Restrictions apply.

Full document details: ISO/IEC/IEEE 8802-22-2021

IEEE Standard for Information Technology—
Telecommunications and information exchange between systems
Wireless Regional Area Networks (WRAN)—
Specific requirements

Part 22: Cognitive Wireless RAN Medium Access Control (MAC) and Physical Layer (PHY) Specifications: Policies and Procedures for Operation in the Bands that Allow Spectrum Sharing where the Communications Devices May Opportunistically Operate in the Spectrum of Primary Service

1. Overview

1.1 Scope

This standard specifies the air interface, including the cognitive radio medium access control layer (MAC) and physical layer (PHY), of point-to-multipoint and backhaul wireless regional area networks (WRANs) comprised of a professional fixed base station (BS) with fixed and portable user terminals. The standard specifies operation in the bands that allow spectrum sharing where the communications devices may opportunistically operate in the spectrum of the primary service, such as the VHF/UHF TV broadcast bands between 54 MHz to 862 MHz, and the 1300 MHz to 1750 MHz and 2700 MHz to 3700 MHz bands provided the regulatory regime allows it.

1.2 Purpose

This standard is intended to enable deployment of interoperable IEEE 802® multivendor WRAN products, to facilitate competition in broadband access by providing alternatives to wireline broadband access and extending the deployability of such systems into diverse geographic areas, including sparsely populated rural areas, while preventing harmful interference to incumbent licensed services. The standard specifies operation in the bands that allow spectrum sharing where the communications devices may opportunistically operate in the spectrum of the primary service, such as the VHF/UHF TV broadcast bands between 54 MHz to 862 MHz, and the 1300 MHz to 1750 MHz and 2700 MHz to 3700 MHz bands provided the regulatory regime allows it.

Copyright © 2020 IEEE. All rights reserved.

Documents
Document Sharing Hub

Authorized licensed use limited to: Tsinghua University. Downloaded on February 26,2026 at 08:39:27 UTC from IEEE Xplore. Restrictions apply.

Full document details: ISO/IEC/IEEE 8802-22-2021

1.3 Introduction

The WRANs for which this standard has been developed are expected to operate primarily in low population density areas in order to provide broadband access to data networks. The WRAN systems will use vacant channels in the VHF and UHF bands allocated to the Television Broadcasting Service in the frequency range between 54 MHz and 862 MHz while avoiding interference to the broadcast incumbents in these bands. A typical application can be the coverage of the rural area around a village, as illustrated in Figure 1(a), within a radius of 10 km to 30 km from the BS depending on its EIRP and antenna height. The MAC can also accommodate user terminals located as far as 100 km with proper scheduling of the traffic in the frame when exceptional radio frequency (RF) signal propagation conditions are present. With the PHY implemented in this standard, WRAN systems can cover up to a radius of 30 km without special scheduling.

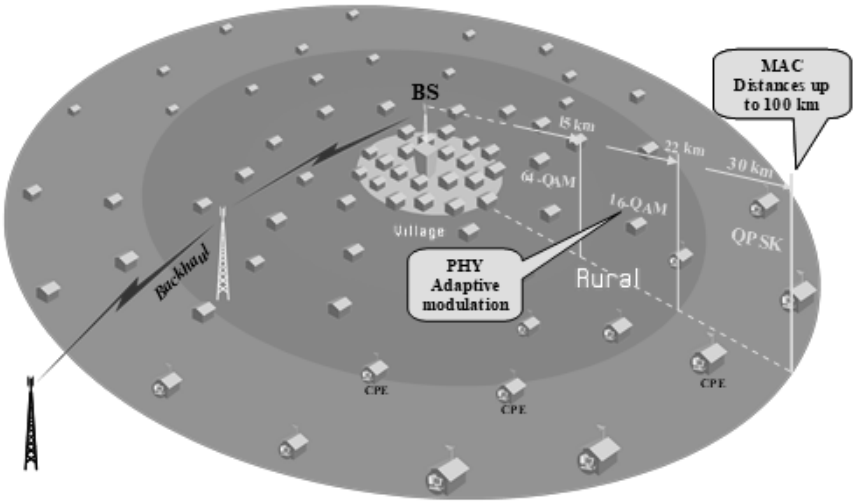

Figure 1(a)—IEEE 802.22 WRAN cell with a base station and user terminals

A BS complying with this standard shall be able to provide high-speed Internet service for up to 512 fixed or portable customer premise equipment (CPE) devices or groups of devices within its coverage area assuming different quality of service (QoS) requirements for various CPEs, while meeting the regulatory requirements for protection of the incumbents.

This standard includes cognitive radio techniques to mitigate interference to incumbents, including geolocation capability, provision to access a database of incumbent services, and spectrum-sensing technology to detect the presence of incumbent services, other WRAN systems, and IEEE 802.22.1 wireless beacons.

The Advanced Wireless Regional Area Networks (A-WRANs) for which this standard has also been developed are expected to support enhanced broadband services and monitoring applications such as real-time and/or near real-time monitoring, emergency broadband services, remote medical services, etc. The A-WRAN provides all essential functionalities of PHY, MAC, security, and cognitive radio technologies defined in the original IEEE 802.22 WRAN and supports an additional PHY Operational mode (PHY-OM2) and additional functionalities of multi-hop relay operations, multiple channel operations, multiple-input-multiple-output (MIMO) operations, and advanced security to extend regional area broadband services to the regional monitoring applications and the enhanced broadband services. The A-WRAN provides connectivity through two new types of services, multi-hop relay and multi-channel operation. Figure 1(b) and Figure 1(c) are examples of the A-WRAN providing enhancement to connectivity using multi-hope relay. Figure 1(d) and Figure 1(e) are examples of the A-WRAN increasing capacity in the network using multi-channel operation at the A-BS, or at the A-BS and A-CPEs. The A-WRAN can only operate in the multirelay or multi-channel services at any given time.

Copyright © 2020 IEEE. All rights reserved.

Documents
Document Sharing Hub

Authorized licensed use limited to: Tsinghua University. Downloaded on February 26,2026 at 08:39:27 UTC from IEEE Xplore. Restrictions apply.

Full document details: ISO/IEC/IEEE 8802-22-2021

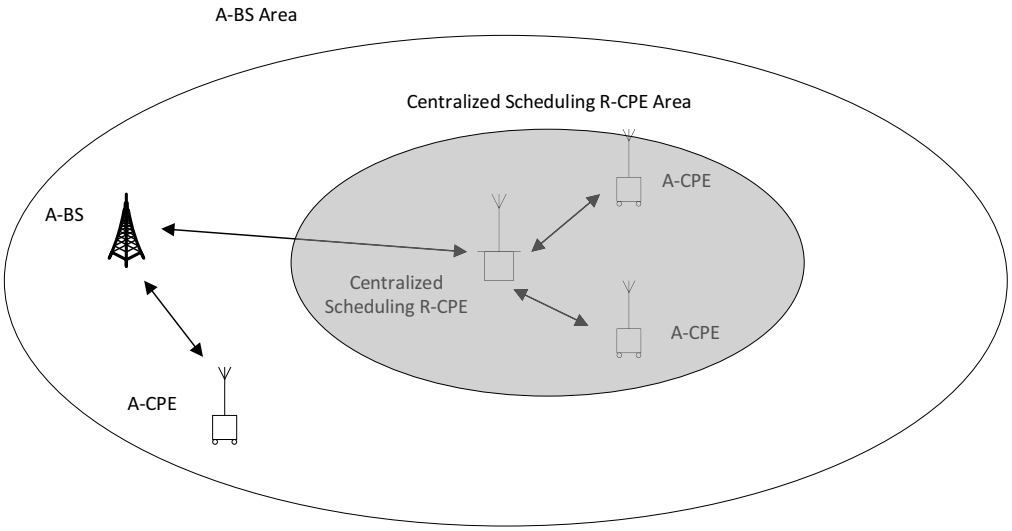

Figure 1(b)—Example of an IEEE 802.22 A-WRAN cell with centralized scheduling multi-hop relay

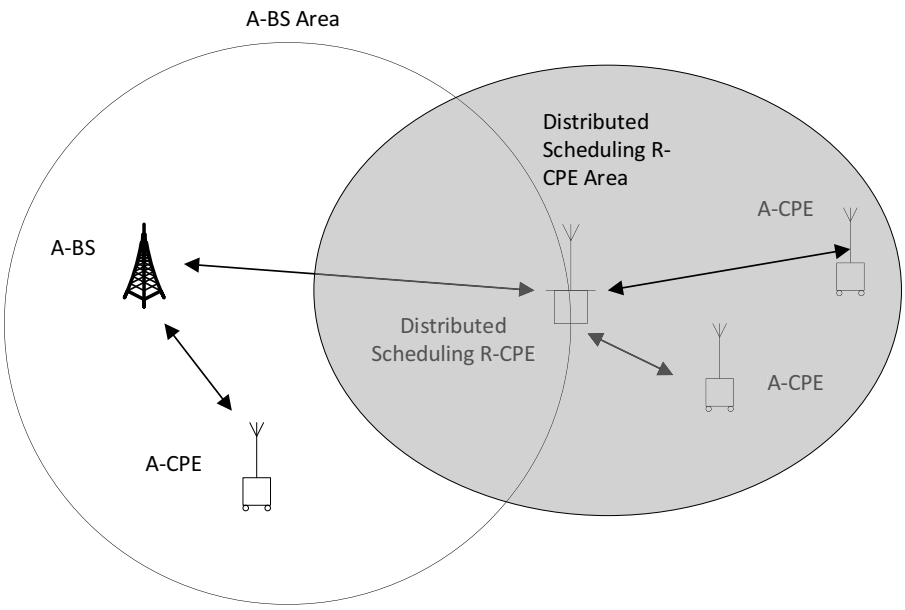

Figure 1(c)—Example of IEEE 802.22 A-WRAN cell with distributed scheduling multi-hop relay

Copyright © 2020 IEEE. All rights reserved.

Documents
Document Sharing Hub

Authorized licensed use limited to: Tsinghua University. Downloaded on February 26,2026 at 08:39:27 UTC from IEEE Xplore. Restrictions apply.

Full document details: ISO/IEC/IEEE 8802-22-2021

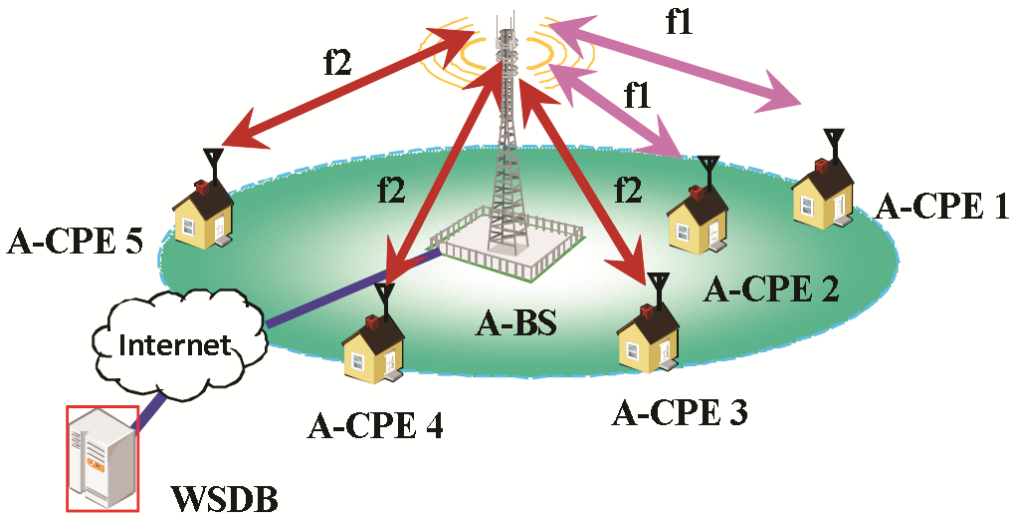

Figure 1(d)—Example of IEEE 802.22 A-WRAN cell with multi-channel operation at the A-BS

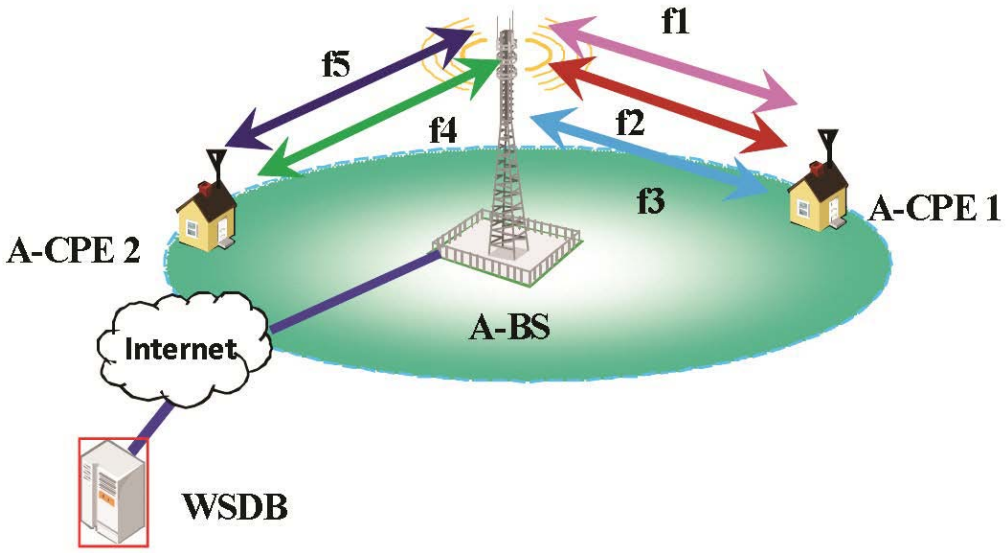

Figure 1(e)—Example of IEEE 802.22 A-WRAN cell with multi-channel operation at the A-BS and the A-CPE

An advanced base station (A-BS) complying with this standard shall be able to provide broadband services for the CPEs such as the advanced CPE (A-CPE) through direct connectivity to the A-BS, and/or through a relay CPE (R-CPE) that is an A-CPE configured to act as a relay CPE. An A-BS complying with this standard shall be able to provide broadband services to A-CPEs operating on multiple channels when multi-channel operation is enabled.

Copyright © 2020 IEEE. All rights reserved.

Documents
Document Sharing Hub

Authorized licensed use limited to: Tsinghua University. Downloaded on February 26,2026 at 08:39:27 UTC from IEEE Xplore. Restrictions apply.

Full document details: ISO/IEC/IEEE 8802-22-2021

1.4 Word usage

The word *shall* indicates mandatory requirements strictly to be followed in order to conform to the standard and from which no deviation is permitted (shall equals is required to).[1, 2]

The word *should* indicates that among several possibilities one is recommended as particularly suitable, without mentioning or excluding others; or that a certain course of action is preferred but not necessarily required (should equals is recommended that).

The word *may* is used to indicate a course of action permissible within the limits of the standard (may equals is permitted to).

The word *can* is used for statements of possibility and capability, whether material, physical, or causal (can equals is able to).

[1] The use of the word *must* is deprecated and cannot be used when stating mandatory requirements, *must* is used only to describe unavoidable situations.

[2] The use of *will* is deprecated and cannot be used when stating mandatory requirements, *will* is only used in statements of fact.

Copyright © 2020 IEEE. All rights reserved.

Documents
Document Sharing Hub

Authorized licensed use limited to: Tsinghua University. Downloaded on February 26,2026 at 08:39:27 UTC from IEEE Xplore. Restrictions apply.

Full document details: ISO/IEC/IEEE 8802-22-2021

2. Normative references

The following referenced documents are indispensable for the application of this document (i.e., they must be understood and used, so each referenced document is cited in text and its relationship to this document is explained). For dated references, only the edition cited applies. For undated references, the latest edition of the referenced document (including any amendments or corrigenda) applies.

ANSI X9.62-2005, Public Key Cryptography for the Financial Services Industry: The Elliptic Curve Digital Signature Algorithm (ECDSA).[3]

ANSI X9.63-2001, Public Key Cryptography for the Financial Services Industry: Key Agreement and Key Transport Using Elliptic Curve Cryptography.

Federal Communications Commission 08-260, Second Report and Order and Memorandum Opinion and Order in the Matter of Unlicensed Operation in the TV Broadcast Bands, November 14, 2008.[4]

Federal Communications Commission 10-174, Second Memorandum Opinion and Order in the Matter of Unlicensed Operation in the TV Broadcast Bands, September 23, 2010.

FIPS 180-3, Secure Hash Standard (SHS), October 2008.[5]

FIPS 186-3, Digital Signature Standard (DSS), June 2009.

FIPS 197, Advanced Encryption Standard, November 2001.

IEEE Std 802®, IEEE Standard for Local and metropolitan area networks: Overview and Architecture.[6, 7]

IEEE Std 802.1Qcp™-2018, IEEE Standard for Local and metropolitan area networks—Bridges and Bridged Networks—Amendment 30: YANG Data Model.

IEEE Std 802.3™, IEEE Standard for Ethernet.

IEEE Std 802.16™, IEEE Standard for Local and metropolitan area networks—Part 16: Air Interface for Broadband Wireless Access Systems.

IEEE Std 802.22.1™-2010, IEEE Standard for Information Technology—Telecommunications and information exchange between systems—Local and metropolitan area networks—Specific requirements: Part 22.1: Standard to Enhance Harmful Interference Protection for Low-Power Licensed Devices Operating in TV Broadcast Bands.

IETF RFC 2437, PKCS #1: RSA Cryptography Specifications Version 2.0, October 1998.[8]

IETF RFC 2578, Structure of Management Information Version 2 (SMIv2), April 1999.

[3]ANSI publications are available from the American National Standards Institute (http://www.ansi.org/).

[4]FCC publications are available at https://www.fcc.gov/edocs.

[5]FIPS publications are available from the National Technical Information Service, U. S. Department of Commerce (http://www.ntis.org/).

[6]The IEEE standards or products referred to in Clause 2 are trademarks owned by The Institute of Electrical and Electronics Engineers, Incorporated.

[7]IEEE publications are available from the Institute of Electrical and Electronics Engineers (http://standards.ieee.org).

[8]IETF documents (i.e., RFCs) are available for download at http://www.rfc-archive.org/.

Copyright © 2020 IEEE. All rights reserved.

Documents
Document Sharing Hub

Authorized licensed use limited to: Tsinghua University. Downloaded on February 26,2026 at 08:39:27 UTC from IEEE Xplore. Restrictions apply.

Full document details: ISO/IEC/IEEE 8802-22-2021

IETF RFC 2758, Definitions of Managed Objects for Service Level Agreements Performance Monitoring, February 2000.

IETF RFC 3279, Algorithms and Identifiers for the Internet X.509 Public Key Infrastructure Certificate and Certificate Revocation List (CRL) Profile, April 2002.

IETF RFC 4492, Elliptic Curve Crytopgraphy (ECC) for Transport Layer Security (TLS), May 2006.

IETF RFC 5216, The EAP-TLS Authentication Protocol, March 2008.

IETF RFC 5246, The Transport Layer Security (TLS) Protocol Version 1.2, August 2008.

IETF RFC 5280, Internet X.509 Public Key Infrastructure Certificate and Certificate Revocation List (CRL) Profile, May 2008.

IETF RFC 5281, Extensible Authentication Protocol Tunneled Transport Layer Security Authenticated Protocol Version 0 (EAP-TTLSv0), August 2008.

IETF RFC 5649, Advanced Encryption Standard (AES) Key Wrap with Padding Algorithm, August 2009.

IETF RFC 6020, YANG—A Data Modeling Language for the Network Configuration Protocol (NETCONF), October 2010.

International Telecommunications Union, Radio Regulations, Geneva, Switzerland, Edition of 2008.[9]

NIST Special Publication 800-38D, Recommendation for Block Cipher Modes of Operation: Galois/ Counter Mode (GCM) and GMAC, November 2007.[10]

NMEA 0183, Interface Standard of the National Marine Electronics Association, Version 4.00.[11]

Standards for Efficient Cryptography Group (SECG), SEC 4: Elliptic Curve Qu-Vanstone Implicit Certificate Scheme (ECQV), Version 1.0, January 24, 2013.[12]

Trusted Computing Group, TPM Main Part 1 Design Principles Specification Version 1.2 Level 2 (Revision 103) 9 July 2007.[13]

Trusted Computing Group, TPM Main Part 2 TPM Structures Specification Version 1.2 Level 2 (Revision 116) 1 March 2011.

Trusted Computing Group, TPM Main Part 3 Commands Specification Version 1.2 Level 2 (Revision 116) 1 March 2011.

[9]ITU-T publications are available from the International Telecommunications Union (http://www.itu.int/).
[10]NIST publications are available from the National Institute of Standards and Technology (http://www.csrc.nist.gov/).
[11]NMEA publications are available from the National Marine Electronics Association at https://www.nmea.org/.
[12]Available at https://www.secg.org/.
[13]Trusted Computing Group publications available at https://trustedcomputinggroup.org/resource/tpm-main-specification/.

Copyright © 2020 IEEE. All rights reserved.

Documents
Document Sharing Hub

Authorized licensed use limited to: Tsinghua University. Downloaded on February 26,2026 at 08:39:27 UTC from IEEE Xplore. Restrictions apply.

Full document details: ISO/IEC/IEEE 8802-22-2021

3. Definitions

For the purposes of this document, the following terms and definitions apply. The *IEEE Standards Dictionary Online* should be consulted for terms not defined in this clause.[14]

access zone (AZ): A communication zone between an advanced base station (A-BS) and relay customer premise equipment (R-CPE) or between an A-BS and an advanced customer premise equipment (A-CPE) in a frame defined by frame structure for PHY Operation Mode 2 (PHY-OM2).

advanced base station (A-BS): A generalized equipment set providing connectivity, management, and control of the advanced customer premise equipment (A-CPE) and the relay customer premise equipment (R-CPE).

NOTE—The functionalities attributed to the A-BS, in the context of this standard, may be implemented by a device or a collection of devices.[15]

advanced customer premise equipment (A-CPE): A generalized equipment set providing connectivity between an advanced base station (A-BS) and a subscriber premise, or between an relay customer premise equipment (R-CPE) and a subscriber premise. A-CPE is used for any customer premise equipment that is not a CPE or an R-CPE. When multi-hop relay is not operational in the Advanced Wireless Regional Area Network (A-WRAN), the A-CPE can be configured to operate in multi-channel mode.

Advanced Wireless Regional Area Network (A-WRAN): The A-WRAN provides all essential functionalities of PHY, MAC, security, and cognitive radio technologies defined in the IEEE 802.22 WRAN and supports additional functionalities of an additional PHY Operation Mode 2 (PHY-OM2), multi-hop relay operations, multiple channel operations, multiple-input-multiple-output (MIMO) operations, and advanced security to extend regional area broadband services to the regional monitoring applications and the enhanced broadband services.

analog television: Radio frequency (RF) transmission of audio and video by analog signals [e.g., NTSC, PAL, SECAM).

NOTE—See ITU-R BT.470 [B47].[16]

authenticator: An entity at one end of a point-to-multipoint Wireless Regional Area Network (WRAN) link that facilitates the authentication of the entity attached at the other end of that link.

backup channel: A channel that has been cleared [i.e., verified that no incumbent service will be affected by Wireless Regional Area Network (WRAN) operation in this channel] to immediately become the operating channel in case the WRAN needs to switch channel.

NOTE—See 11.2.2.

base station (BS): Generalized equipment set providing connectivity, management, and control of the customer premise equipment (CPE).

NOTE—The functionalities attributed to the BS, in the context of this standard, may be implemented by a device or a collection of devices.

broadcast connection: A connection established to transport MAC management messages and data from the base station (BS) to all of the customer premise equipment (CPE) in the cell on the downstream (DS).

[14] *IEEE Standards Dictionary Online* is available at: http://dictionary.ieee.org.

[15] Notes in text, tables, and figures of a standard are given for information only and do not contain requirements needed to implement this standard.

[16] The numbers in brackets correspond to those of the bibliography in Annex H.

Copyright © 2020 IEEE. All rights reserved.

Documents
Document Sharing Hub

Authorized licensed use limited to: Tsinghua University. Downloaded on February 26,2026 at 08:39:27 UTC from IEEE Xplore. Restrictions apply.

Full document details: ISO/IEC/IEEE 8802-22-2021

burst: A two-dimensional segment of OFDM subchannels (frequency domain) and symbols (time domain). It may comprise multiple MAC Protocol Data Units (PDUs) that are encoded with the same physical modulation and coding.

candidate channel: A channel that, once cleared from potential harmful interference to incumbents, can become a backup channel.

NOTE—See 11.2.2.

carrier-to-noise ratio (CNR): Ratio of the power of a subcarrier to the noise power in a bandwidth corresponding to the subcarrier spacing for a set of system parameters.

NOTE—See Table 248.

cell: An IEEE 802.22 cell (or simply, a cell) is formed by a single IEEE 802.22 base station (BS) and zero or more IEEE 802.22 customer premise equipment (CPE) associated with and under control of this IEEE 802.22 BS. The coverage area of this cell extends up to the point where the signal received from the IEEE 802.22 BS is sufficient to allow IEEE 802.22 CPEs to associate and maintain communication with the BS.

centralized relay zone (CRZ): A communication zone between a centralized scheduling relay customer premise equipment (R-CPE) and advanced customer premise equipment (A-CPE) in a frame defined by frame structure for PHY Operation Mode 2 (PHY-OM2).

centralized scheduling relay customer premise equipment (R-CPE): A generalized equipment set providing relay connectivity between an advanced base station (A-BS) and advanced customer premise equipment (A-CPE) using centralized scheduling mode.

centralized scheduling mode: A mode where an advanced customer premise equipment (A-CPE) operates as a centralized scheduling relay customer premise equipment (R-CPE).

channel: Refers to a specific physical radio frequency (RF) channel, a contiguous segment of spectrum in the TV broadcast frequency bands, which may be 6 MHz, 7 MHz, or 8 MHz wide, depending on the relevant regulatory domains. *See also:* **logical channel.**

cognitive plane: The cognitive plane consists of all the entities in the IEEE 802.22 reference architecture that relate to cognitive functions. These cognitive functions are the spectrum manager/spectrum automaton, spectrum sensing function, the geolocation function, and the security sublayer 2. The spectrum manager/ spectrum automaton reside at the same level as the MAC common part sublayer in the data plane whereas the spectrum sensing function (SSF) and the geolocation function reside at the same level as the PHY in the data plane.

cognitive radio: A functionality of some wireless communication devices in which either a network or a wireless node can change the devices' transmission and/or reception parameters to communicate efficiently and to avoid interference with licensed or license-exempt users. This alteration of parameters is based on the active monitoring of several factors in the external and internal radio environment, such as radio frequency spectrum, location information, user behavior, network state, etc.

coexistence: State by which license-exempt wireless communication systems of various types can share a same radio frequency (RF) transmission channel in a common area while minimizing harmful interference to each other by the use of appropriate means.

coexistence beacon: Series of bursts that is transmitted with the goal of improving self-coexistence among overlapping IEEE 802.22 cells, potentially improving coexistence among license-exempt wireless

Copyright © 2020 IEEE. All rights reserved.

Documents
Document Sharing Hub

Authorized licensed use limited to: Tsinghua University. Downloaded on February 26,2026 at 08:39:27 UTC from IEEE Xplore. Restrictions apply.

Full document details: ISO/IEC/IEEE 8802-22-2021

communication systems of various types if so equipped, regularly signaling the identity of the transmission device for potential interference resolution and enhancing geolocation ranging resolution between customer premise equipment (CPE) within a cell. The beacon is transmitted under the control of the base station (BS) during self-coexistence windows.

connection: Data path established between base station (BS) and customer premise equipment (CPE) for transport of data.

customer premise or portable equipment (CPE): A generalized equipment set providing connectivity between a base station (BS) and a subscriber premise.

cyclic prefix (CP): The portion of an OFDM symbol used to absorb inter-symbol interference caused by transmission channel time dispersion. The cyclic prefix is actually a copy of the last portion of the symbol appended to the front of the same symbol. Its size is defined in terms of a ratio to the useful part of the OFDM symbol

NOTE—See Table 249.

database service: Service officially operated under the rules of the local regulatory authority that provides a list of available channels and possibly the maximum EIRP allowable on these channels based on queries containing the geolocation of the Wireless Regional Area Network (WRAN) devices.

digital television: Radio frequency (RF) transmission of audio and video by digital signals (e.g., ATSC, DVB-T, ISDB-T).

NOTE—See ITU-R BT-798 [B49].

distributed relay zone (DRZ): A communication zone between a distributed scheduling relay customer premise equipment (R-CPE) and advanced customer premise equipment (A-CPE) frame defined by frame structure for PHY Operation Mode 2 (PHY-OM2).

distributed scheduling relay customer premise equipment (R-CPE): A generalized equipment set providing relay connectivity between an advanced base station (A-BS) and advanced customer premise equipment (A-CPE), and providing connectivity, management and control of the A-CPEs within a local network, while operating in distributed scheduling mode.

distributed scheduling mode: A mode where an operates as a distributed scheduling relay customer premise equipment (R-CPE).

downstream (DS): The direction of the transmitted signal from a base station (BS) to customer premise equipment (CPE).

downstream channel descriptor (DCD): A medium access control layer (MAC) message that describes the physical layer (PHY) characteristics of a downstream burst.

downstream interval usage code (DIUC): An interval usage code specific to a downstream burst. *See also:* **interval usage code.**

downstream map (DS-MAP): A medium access control layer (MAC) message that defines the structure of the downstream subframe, i.e., burst locations in the time and frequency domain of the OFDM.

flow Type (FT): An identifier that identifies a particular flow of traffic assigned to a specific customer premise equipment (CPE) or group of CPEs. *See also:* **station ID (SID)**.

Copyright © 2020 IEEE. All rights reserved.

Documents
Document Sharing Hub

Authorized licensed use limited to: Tsinghua University. Downloaded on February 26,2026 at 08:39:27 UTC from IEEE Xplore. Restrictions apply.

Full document details: ISO/IEC/IEEE 8802-22-2021

frame: Basic time unit over which base stations (BSs) and customer premise equipment (CPE) communicate with each other. It is comprised of one downstream subframe, one upstream subframe, and a self-coexistence window when present.

frame contention source (FC-SRC): A Wireless Regional Area Network (WRAN) cell that is demanding additional spectrum resources (i.e., data frame transmission opportunities on a channel) and is initiating an interactive frame contention process with the target frame contention destination (FC-DST).

frame contention destination (FC-DST): A Wireless Regional Area Network (WRAN) cell that is the target of the frame contention request initiated by a frame contention source (FC-SRC), and is the occupier of the spectrum resources being requested by the FC-SRC.

frame contention number (FCN): Number randomly generated by the frame contention sources (FC-SRCs) and frame contention destinations (FC-DSTs) for determining by contention the priority of frame access.

geolocation: The process of acquiring the location data of a device, determining its latitude and longitude, and producing the corresponding NMEA string.

group resource allocation (GRA): The group is composed of one relay customer premise equipment (R-CPE) and many advanced customer premise equipment (A-CPE). The advanced base station (A-BS) allocates the resources on a group basis, and manages the backup and candidate channels on a group basis.

harmful interference: Any emission, radiation, or induction that endangers the functioning of a radio navigation service or of other safety services or seriously degrades, obstructs, or repeatedly interrupts a radiocommunications service operating in accordance with the ITU and local Regulations.

NOTE—See Article 1 of the ITU Radio Regulations, 1.169, and the FCC 47 CFR 15.3(m).[17]

IEEE 802.22.1 wireless beacon: A radio frequency (RF) device that provides enhanced protection to licensed low-power auxiliary devices such as those used in the production and transmission of broadcast programs [e.g., devices licensed as secondary under Title 47 of the Code of Federal Regulations (CFR) in the USA and equivalent devices in other regulatory domains] from harmful interference potentially caused by Wireless Regional Area Network (WRAN) operation.

in-band: The operating channel (N) and its first adjacent channels (N–1 and N+1).

incumbents: Licensed transmission systems operating in the TV bands on a primary or secondary basis according to international and local regulatory rules.

interval usage code: A code identifying a particular burst profile that can be used for a downstream (DS) or upstream (US) transmission interval.

local cell: A cell is formed by a distributed scheduling relay customer premise equipment (R-CPE) and zero or more advanced customer premise equipment (A-CPEs) associated with and under control of the distributed scheduling R-CPE. The coverage area of this local cell extends up to the point where the signal received from the distributed scheduling R-CPE is sufficient to allow A-CPEs to associate and maintain communication with the advanced base station (A-BS) on relay connection.

logical channel: This is the channel number used by the medium access control layer (MAC), and does not necessarily reflect a physical channel. This can be mapped into any representation as defined by the physical layer (PHY). *See also:* **channel.**

[17]Information on references can be found in Clause 2.

Copyright © 2020 IEEE. All rights reserved.

Documents
Document Sharing Hub

Authorized licensed use limited to: Tsinghua University. Downloaded on February 26,2026 at 08:39:27 UTC from IEEE Xplore. Restrictions apply.

Full document details: ISO/IEC/IEEE 8802-22-2021

MAC Protocol Data Unit (PDU): The smallest unit of transmission/reception to be processed by the medium access control layer (MAC). It is comprised of the MAC header, the payload, and Cyclic Redundancy Check (CRC).

managed node: A node that collects and stores the managed objects in the format of a management information base (MIB) that is made available to the network management system via the Simple Network Management Protocol (SNMP).

managed object: A specific characteristic, among many, of a managed device. Managed objects are comprised of one or more object instances, which are essentially variables. A managed object is also referred to as a management information base (MIB) object or an object.

management connection: A connection established to transport medium access control layer (MAC) management messages and data between the base station (BS) and a particular customer premise equipment (CPE).

Management Information Base (MIB): A collection of information that is organized hierarchically. MIBs are accessed using Simple Network Management Protocol (SNMP). They are comprised of managed objects that are identified by object identifiers.

multicast management connection: A connection established to transport medium access control layer (MAC) management messages and data from the base station (BS) to a particular group of customer premise equipment (CPE) on the downstream (DS).

multicast transport connection: A connection established to transport user data from the base station (BS) to a particular group of customer premise equipment (CPE) on the downstream (DS).

multiple channel: Refers to more than one specific physical radio frequency (RF) channel in the TV broadcast frequency bands, which may be 6 MHz, 7 MHz, or 8 MHz wide depending on the relevant regulatory domains.

multiple-input, multiple-output (MIMO): A system employing at least two transmit (Tx) antennas and at least two receive (Rx) antennas to improve the system capacity, coverage, or throughput

OFDM slot: A two-dimensional entity defined as one OFDM symbol by one subchannel.

operating channel: Channel being used by a Wireless Regional Area Network (WRAN) system.

out-of-band: Any channel that is not in-band. *See also:* **in-band.**

PHY Operation Mode 1 (PHY-OM1): A physical layer mode supporting the system defined in Clause 9.

PHY Operation Mode 2 (PHY-OM2): A physical layer mode supporting the system defined in Clause 10.

protected contour: The regulator-defined boundary of an area within which a TV station is entitled to protection from harmful interference.

quiet period: A specific period of time during which the base station (BS) has scheduled a cessation of all transmission in its cell for the purpose of sensing.

receive/transmit transition gap (RTG): A gap between the last sample of the upstream (US) subframe and the first sample of the subsequent downstream (DS) subframe at the antenna port of the base station (BS) in a time division duplex (TDD) transceiver. This gap allows time for the BS to switch from receive (Rx) to

Copyright © 2020 IEEE. All rights reserved.

Documents
Document Sharing Hub

Authorized licensed use limited to: Tsinghua University. Downloaded on February 26,2026 at 08:39:27 UTC from IEEE Xplore. Restrictions apply.

Full document details: ISO/IEC/IEEE 8802-22-2021

transmit (Tx) mode. During this gap, the BS is not transmitting modulated data but simply allowing the BS transmitter carrier to ramp up and the Tx/Rx antenna switch to actuate.

relay customer premise equipment (R-CPE): An advanced customer premise equipment (A-CPE) configured to provide relay connectivity between an advanced base station (A-BS) and A-CPEs. An R-CPE can operate in one of two modes: centralized scheduling mode or distributed scheduling mode.

relay receive/transmit transition gap (RRTG): A gap between the last sample of the downstream (DS) access zone and the first sample of the subsequent DS relay zone at the antenna port of the relay customer premise equipment (R-CPE) in a time division duplex (TDD) transceiver. This gap allows time for the R-CPE to switch from receive (Rx) to transmit (Tx) mode. During this gap, the R-CPE is not transmitting modulated data but simply allowing the R-CPE transmitter carrier to ramp up and the Tx/Rx antenna switch to actuate.

relay transmit/receive transition gap (RTTG): A gap between the last sample of the upstream (US) access zone and the first sample of the subsequent US relay zone at the antenna port of the relay customer premise equipment (R-CPE) in a time division duplex (TDD) transceiver. This gap allows time for the R-CPE to switch from transmit (Tx) to receive (Rx) mode. During this gap, the R-CPE is not transmitting modulated data but simply allowing the R-CPE transmitter carrier to ramp down and the Tx/Rx antenna switch to actuate, and the R-CPE receiver section to activate.

relay zone (RZ): A communication zone between any relay customer premise equipment (R-CPE) and an advanced customer premise equipment (A-CPE) or advanced base station (A-BS). A relay zone is operated as one of the following two relay zones: centralized relay zone (CRZ) and distributed relay zone (DRZ).

RSSL: Received Wireless Regional Area Network (WRAN) signal strength level at a base station (BS) or customer premise equipment (CPE).

RSSI: Received signal strength indication (estimate) on the sensing signal path or Wireless Regional Area Network (WRAN) signal path in sensing mode 2 at a base station (BS) or customer premise equipment (CPE).

security association (SA): The set of security information a base station (BS) and one or more of its customer premise equipment (CPE) share in order to support secure communications. This shared information includes traffic encryption keys (TEKs) and the cipher suite that is to be applied to the SA.

security association identifier (SAID): An identifier shared between the base station (BS) and a customer premise equipment (CPE) that uniquely identifies a security association (SA).

security sublayer 1: Security functions for the Data/Control Plane.

security sublayer 2: Security functions for the Cognitive Plane.

self-coexistence: A state by which wireless communication systems of the same type can share a radio frequency (RF) transmission channel in a common area while minimizing harmful interference to each other by the use of appropriate means.

NOTE—In the case of IEEE 802.22, this means coexistence of multiple nearby IEEE 802.22 cells.

sensing mode: A mode of operation of the spectrum sensing function that specifies the valid outputs of the spectrum sensing function.

Copyright © 2020 IEEE. All rights reserved.

Documents
Document Sharing Hub

Authorized licensed use limited to: Tsinghua University. Downloaded on February 26,2026 at 08:39:27 UTC from IEEE Xplore. Restrictions apply.

Full document details: ISO/IEC/IEEE 8802-22-2021

service flow: Defines the quality of service (QoS) parameters for the Protocol Data Units (PDUs) that are exchanged on a connection, and provides a mechanism for upstream (US) and downstream (DS) QoS management.

service flow identifier (SFID): A unique identifier for a service flow dealing with how higher layer packets/application sessions are mapped to their quality of service (QoS) requirements and scheduling constraints.

signal type array (STA): A one-dimensional array indicating which signal types the spectrum sensing function is to sense.

spectrum manager: The cognitive function at the base station (BS) that will use the inputs from the database service based on the geolocation at the BS and the customer premise equipment (CPE), as well as the input from the spectrum sensing automaton (SSA) at the BS and the CPEs to decide on the channel to be used by the Wireless Regional Area Network (WRAN) cell as well as the EIRP limits imposed on the specific WRAN devices.

spectrum sensing automation: Cognitive function resident at the base station (BS) and the customer premise equipment (CPE) that includes essential features to allow autonomous and directed sensing at the BS and at the CPE as well as proper CPE operation when it is not under the control of a BS.

spectrum sensing function (SSF): The function that observes the radio frequency (RF) spectrum for a defined set of signal types and reports the results of its observations.

station ID (SID): A unique identifier for a customer premise equipment (CPE) under the control of a base station (BS). This can reflect a single CPE, or a group of CPEs (e.g., multicast group).

subchannel: The basic unit of a logical channel used for subcarrier allocation in both downstream (DS) and upstream (US). A subchannel is composed of 28 subcarriers (24 data and 4 pilot subcarriers).

subframe: Formed by a number of bursts transmitted in the same direction [e.g., downstream (DS) subframe, upstream (US) subframe].

superframe: Group of 16 frames initiated by the transmission from the base station (BS) of the superframe preamble and the Superframe Control header (SCH).

Supplicant: An entity at one end of a point-to-multipoint Wireless Regional Area Network (WRAN) link that seeks to be authenticated by an Authenticator attached to the other end of that link.

symbol period: Fundamental unit of duration in the time domain that is equal to the duration of an OFDM symbol in the time domain.

NOTE—See Table 284.

time division duplex (TDD): A duplex scheme where upstream (US) and downstream (DS) transmissions occur at different times but may share the same transmission channel.

transmit/receive transition gap (TTG): A gap between the last sample of the downstream (DS) subframe and the first sample of the subsequent upstream (US) subframe at the antenna port of the base station (BS) in a time division duplex (TDD) transceiver. This gap allows time for the BS to switch from transmit (Tx) to receive (Rx) mode. During this gap, the BS is not transmitting modulated data but simply allowing the BS transmitter carrier to ramp down and the Tx/Rx antenna switch to actuate, and the BS receiver section to activate.

Copyright © 2020 IEEE. All rights reserved.

Documents
Document Sharing Hub

Authorized licensed use limited to: Tsinghua University. Downloaded on February 26,2026 at 08:39:27 UTC from IEEE Xplore. Restrictions apply.

Full document details: ISO/IEC/IEEE 8802-22-2021

transport connection: A connection established to transport user data between the base station (BS) and a particular customer premise equipment (CPE).

upstream (US): The direction of the transmitted signal from a customer premise equipment (CPE) to the base station (BS).

upstream channel descriptor (UCD): A medium access control layer (MAC) message that describes the physical layer (PHY) characteristics of an upstream transmission burst.

upstream interval usage code (UIUC): An interval usage code specific to an upstream burst. *See also:* **interval usage code.**

upstream map (US-MAP): A medium access control layer (MAC) message that defines the media access parameters (i.e., burst start time, burst length, and subchannel usage) for the OFDMA upstream (US) subframe for the customer premise equipment (CPE) scheduled to transmit toward the base station (BS).

urgent coexistence situation (UCS): A situation where a Wireless Regional Area Network (WRAN) detects incumbents in the current operating channel.

wireless microphone: A wireless microphone with licensed use of the TV broadcast bands (e.g., Part 73 and 74 devices in the U.S.A.) and equivalent low-power auxiliary devices allowed under the rules of various regulatory domains.

Copyright © 2020 IEEE. All rights reserved.

Documents
Document Sharing Hub

Authorized licensed use limited to: Tsinghua University. Downloaded on February 26,2026 at 08:39:27 UTC from IEEE Xplore. Restrictions apply.

Full document details: ISO/IEC/IEEE 8802-22-2021

4. Abbreviations and acronyms

AAA	Authentication, Authorization, and Accounting
AAD	additional authenticated data
A-BS	advanced base station
A-CPE	advanced customer premise equipment
AES	Advanced Encryption Standard
A-FCH	advanced frame control header
AK	authorization key
ARQ	Automatic Repeat Request
AU	antenna unit
A-WRAN	advanced wireless regional area network
AZ	access zone
BCC	binary convolutional coding
BE	best effort
BS	base station
BSN	block sequence number
BTC	Block Turbo Code
CA	Certificate Authority
CAM	channel allocation manager
CBP	Coexistence Beacon Protocol
CC	confirmation code
CDMA	Code Division Multiple Access
CHU	channel transceiver unit
CID	connection identifier
CINR	carrier-to-interference and noise ratio
CNR	carrier-to-noise ratio
CoS	class of service
CP	cyclic prefix
CPE	customer premise equipment
CPS	Common Part sublayer
CRC	Cyclic Redundancy Check

Copyright © 2020 IEEE. All rights reserved.

Documents
Document Sharing Hub

Authorized licensed use limited to: Tsinghua University. Downloaded on February 26,2026 at 08:39:27 UTC from IEEE Xplore. Restrictions apply.

Full document details: ISO/IEC/IEEE 8802-22-2021

CRZ	centralized relay zone
CS SAP	Convergence sublayer Service Access Point
CS	Convergence sublayer
C-SAP	Control Service Access Point
CTC	Convolutional Turbo Code
CTR	Counter Mode Encryption
DAMA	Demand Assigned Multiple Access
DCD	Downstream Channel Descriptor
DFS	Dynamic Frequency Selection
DHCP	Dynamic Host Configuration Protocol
DIUC	Downstream Interval Usage Code
DL	downlink
DRZ	distributed relay zone
DS	downstream
DSA	Dynamic Service Addition
DSC	Dynamic Service Change
DSD	Dynamic Service Deletion
DSx	Dynamic Service Addition, Change, or Deletion
DTT	downstream transit test
EAP	Extensible Authentication Protocol
ECC	Elliptic Curve Cryptography
EIRP	Effective Isotropic Radiated Power
Ext-FCH	extended frame control header
FC-DST	Frame Contention Destination
FCH	Frame Control Header
FCN	Frame Contention Number
FC-SRC	Frame Contention Source
FDD	Frequency Division Duplex
FFT	Fast Fourier Transform
FT	flow type
GCM	Galois Counter Mode

Copyright © 2020 IEEE. All rights reserved.

Documents
Document Sharing Hub

Authorized licensed use limited to: Tsinghua University. Downloaded on February 26,2026 at 08:39:27 UTC from IEEE Xplore. Restrictions apply.

Full document details: ISO/IEC/IEEE 8802-22-2021

GMAC	AES-GCM Message Authentication Code
GMH	generic MAC header
GRA	group resource allocation
HCS	Header Check Sequence
IANA	Internet Assigned Numbers Authority
ID	identification
IDRP	Incumbent Detection Recovery Protocol
IE	information element
IETF	Internet Engineering Task Force
IFFT	Inverse FFT
IP	Internet Protocol
IUC	Interval Usage Code
LAN	Local Area Network
LBS	Location Based Service
LCU	local cell update
LDPC	Low Density Parity Check Code
LLC	Link Layer Control
LSB	least significant bit
LTS	Long Training Sequence
MAC SAP	Medium Access Control Service Access Point
MAC	Medium Access Control Layer
MD-TCM	multidimensional trellis coded modulation
MIB	Management Information Base
MIC	Message Integrity Check
MIMO	multiple-input, multiple-output
MPDU	MAC Layer Protocol Data Unit
MPEG	Moving Pictures Experts Group
MPFA	Maximum Probability of False Alarm
MPR	microphone protection radius
M-SAP	Management Service Access Point
MSB	most signification bit

Copyright © 2020 IEEE. All rights reserved.

Documents
Document Sharing Hub

Authorized licensed use limited to: Tsinghua University. Downloaded on February 26,2026 at 08:39:27 UTC from IEEE Xplore. Restrictions apply.

Full document details: ISO/IEC/IEEE 8802-22-2021

MSDU	MAC Layer Service Data Unit
NCMS	Network Control and Management System
NCS	Network Control System
NMEA	National Marine Electronics Association
NMS	Network Management System
nrtPS	Non-real-time Polling Service
ODFC	on-demand frame contention
OFDM	Orthogonal Frequency Division Multiplexing
OFDMA	Orthogonal Frequency Division Multiple Access[18]
OSIC	ordered successive interference cancellation
OSTBC	orthogonal space-time block codes
PAPR	Peak-to-Average Power Ratio
PDU	Protocol Data Unit
PER	Packet Error Rate
PHY SAP	Physical Layer Service Access Point
PHY	Physical Layer
PHY-OM1	Physical Layer Operation Mode 1
PHY-OM2	Physical Layer Operation Mode 2
PMP	point to multipoint
PN	Packet Number, also used for pseudo-noise
PPDU	Physical Layer Protocol Data Unit (PHY burst)
PRM	Protocol Reference Model
PSDU	Physical Layer Service Data Unit (equivalent to MPDU)
QAM	Quadrature Amplitude Modulation
QoS	quality of service
QP	quiet period
QPSK	Quadrature Phase-Shift Keying
RAN	Regional Area Network
R-CPE	relay customer premise equipment

[18] To align with accepted usage, OFDMA is also used in this standard to refer to the multi-user variant of OFDM.

Copyright © 2020 IEEE. All rights reserved.

Documents
Document Sharing Hub

Authorized licensed use limited to: Tsinghua University. Downloaded on February 26,2026 at 08:39:27 UTC from IEEE Xplore. Restrictions apply.

Full document details: ISO/IEC/IEEE 8802-22-2021

ROHC	Robust Header Compression
RRM	Radio Resource Management
RRTG	relay receive/transmit transition gap
RS	Reed-Solomon
RSSI	Received Signal Strength Indication on the WRAN signal path or sensing path in sensing mode 2
RSSL	Received WRAN Signal Strength
RTG	Receive/Transmit Transition Gap
rtPS	Real-time Polling Service
RTTG	relay transmit/receive transition gap
SA	security association
SAID	security association identifier
SAP	service access point
SBTC	Shortened Block Turbo Code
SCH	superframe control header
SCM	Security for Control and Management
SCW	self-coexistence window
SDU	Service Data Unit
SFID	service flow identifier
SID	station ID
SM	spectrum manager
SM-GL SAP	Spectrum Manager, Geolocation Service Access Point
SM-SSF SAP	Spectrum Manager, Spectrum Sensing Function Service Access Point
SNMP	Simple Network Management Protocol
SNR	signal-to-noise ratio
SPA	Signal Present Array
SPC	Subcarrier Power Control
SPD	Secondary Protecting Device
SSA	Spectrum Sensing Automaton
SSF	Spectrum Sensing Function
STA	Signal Type Array

Copyright © 2020 IEEE. All rights reserved.

Documents
Document Sharing Hub

Authorized licensed use limited to: Tsinghua University. Downloaded on February 26,2026 at 08:39:27 UTC from IEEE Xplore. Restrictions apply.

Full document details: ISO/IEC/IEEE 8802-22-2021

STC	space time coding
STS	Short Training Sequence
SWS	Sensing Window Specification
SWSA	Sensing Window Specification Array
TCP	Transmission Control Protocol
TDD	time division duplex
TDM	time division multiplex
TDMA	Time Division Multiple Access
TEK	Traffic Encryption Key
TFTP	Trivial File Transfer Protocol
TPC	Transmit Power Control
TRU	transceiver unit
TTG	Transmit/Receive Transition Gap
TU	Time Unit corresponding to a nominal sampling period (see Table 199)
UCD	Upstream Channel Descriptor
UCS	urgent coexistence situation
UGS	Unsolicited Grant Service
UIUC	Upstream Interval Usage Code
UL	uplink
US	upstream
WG	working group
WGS	World Geodetic System
WRAN	Wireless Regional Area Network
YANG	Yet Another Next Generation
ZF	zero-forcing

Copyright © 2020 IEEE. All rights reserved.

Documents
Document Sharing Hub

Authorized licensed use limited to: Tsinghua University. Downloaded on February 26,2026 at 08:39:27 UTC from IEEE Xplore. Restrictions apply.

Full document details: ISO/IEC/IEEE 8802-22-2021

5. System architecture

5.1 Reference architecture

The IEEE 802.22 reference architecture is depicted in Figure 3 and Figure 4. A unique characteristic of this architecture is the addition of cognitive components. Spectrum availability in the TV bands can be fragmented, i.e., some channels can be occupied by incumbents in an area (see Figure 2) while others can be available for WRAN transmission, and this availability can vary in time. As shown in Figure 2, channel 3 is allocated to the IEEE 802.22 WRAN system, while channels 1 and 5 are in use by overlapping IEEE 802.22 cells. Channels 2, 4, and 6 would be available for more WRAN services in the area. Also, proper frequency separation is enforced in order to protect incumbent services using cognitive radio techniques—the air interface must be frequency agile, must adjust to the fragmented and time-varying spectrum availability, and must avoid interference to the TV band incumbent services. The required functional capabilities of these cognitive radio techniques are established in this standard (see Clause 11). In particular, the cognitive components of the system architecture must keep track of multiple channels, know which of these channels are occupied by incumbents and which can be used for WRAN transmission, allow for dynamic frequency selection, and avoid interference to incumbents on a real-time basis.

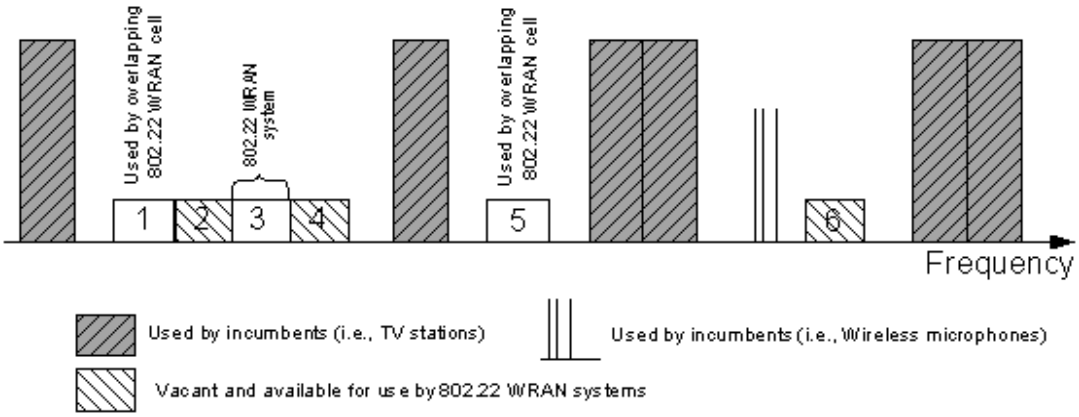

Figure 2—Illustrative diagram of spectrum allocations in TV bands

The Protocol Reference Model (PRM), shown in Figure 3 and Figure 4, keeps the usual data and management/control plane functionality intact, while creating a new cognitive plane to support cognitive radio capabilities. The data plane must carry the end user data as well as the management and control information. Figure 3 and Figure 4 show the PRMs at the BS and at the CPE, respectively.

Copyright © 2020 IEEE. All rights reserved.

Documents
Document Sharing Hub

Authorized licensed use limited to: Tsinghua University. Downloaded on February 26,2026 at 08:39:27 UTC from IEEE Xplore. Restrictions apply.

Full document details: ISO/IEC/IEEE 8802-22-2021

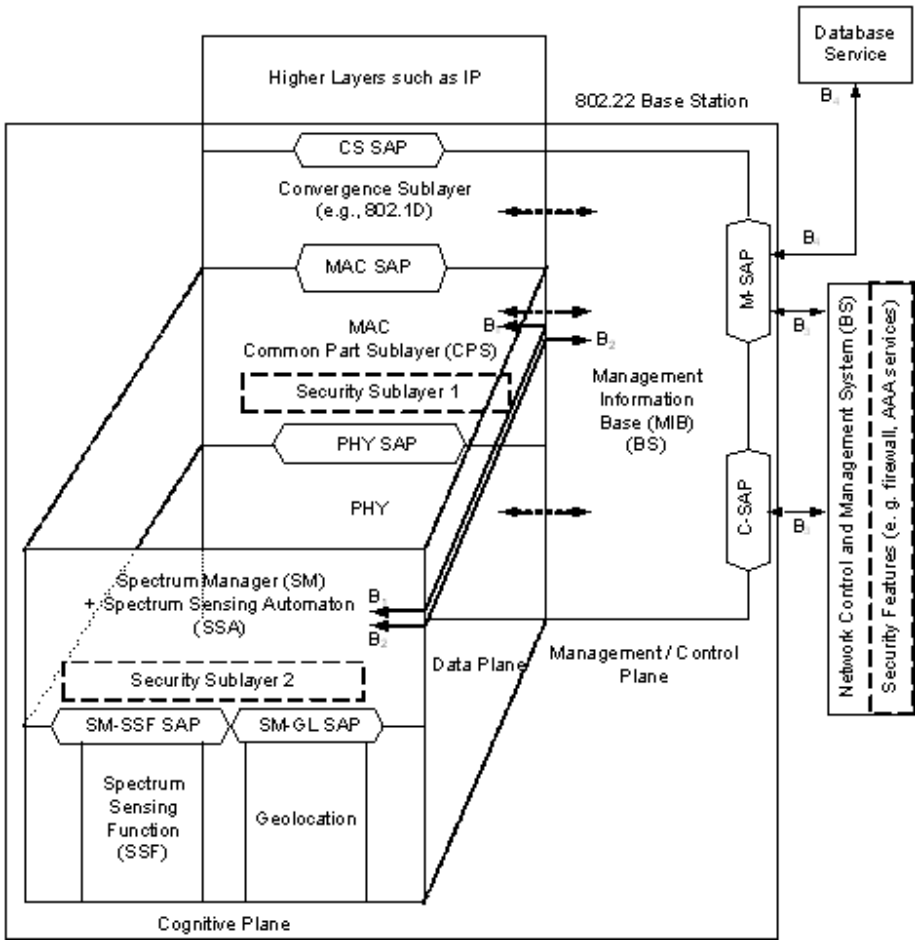

Figure 3—Protocol Reference Model (PRM) of the IEEE 802.22 BS

Copyright © 2020 IEEE. All rights reserved.

Documents
Document Sharing Hub

Authorized licensed use limited to: Tsinghua University. Downloaded on February 26,2026 at 08:39:27 UTC from IEEE Xplore. Restrictions apply.

Full document details: ISO/IEC/IEEE 8802-22-2021

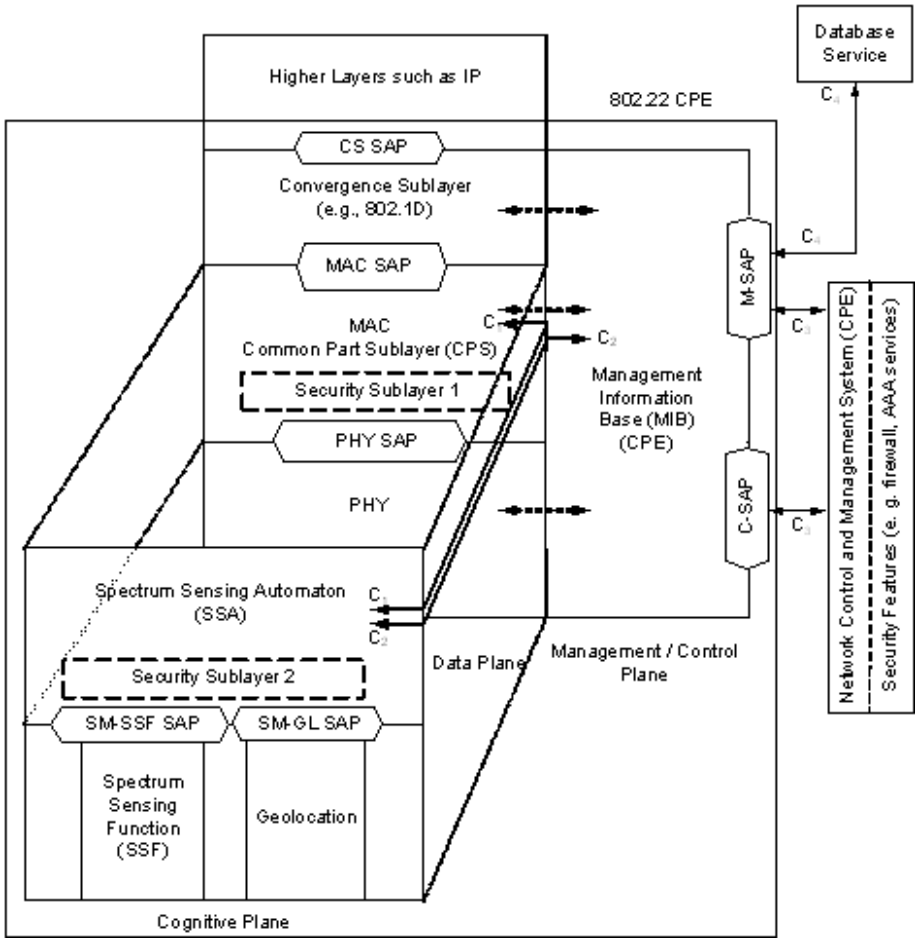

Figure 4—Protocol Reference Model (PRM) of the IEEE 802.22 CPE

5.1.1 Data plane

The data plane consists of the Physical Layer (PHY), the Medium Access Control Layer (MAC) and the Convergence sublayer (CS). Service Access Points (SAPs) are added in between these layers to allow modularization of the system where different components may be disjointed and/or supplied by different vendors. A SAP is provided with a well-defined interface or set of primitives to exchange the information, by virtue of which these different components can talk to each other.

The Data & Control/Management plane of the MAC shall be comprised of three sublayers: service-specific CS, the MAC Common Part sublayer (CPS), and the security sublayer 1. The service-specific CS shall provide transformation or mapping of external network data that is received through the CS SAP, into MAC Service Data Units (SDUs) and data that is received by the MAC CPS through the MAC SAP. This transformation or mapping shall include classifying external network SDUs and associating them to the proper MAC service flow identifier (SFID) and flow type (FT). Multiple CS specifications are provided for interfacing with various protocols. The internal format of the CS payload is unique to the CS, and the MAC CPS is not required to understand the format of or parse any information from the CS payload.

The MAC Common Part sublayer shall provide the core MAC functionality of system access, connection establishment, and connection maintenance. The data that the MAC layer receives from the various CSs through the MAC SAP shall be classified onto particular MAC connections. An example of the MAC CPS

Copyright © 2020 IEEE. All rights reserved.

Documents
Document Sharing Hub

Authorized licensed use limited to: Tsinghua University. Downloaded on February 26,2026 at 08:39:27 UTC from IEEE Xplore. Restrictions apply.

Full document details: ISO/IEC/IEEE 8802-22-2021

service definition is given in Clause 6. QoS is applied to the transmission and scheduling of data over the PHY. The MAC security sublayer 1 shall provide mechanisms for authentication, secure key exchange, encryption, etc. Data, PHY control, and monitoring statistics (spectrum sensing, RSSI, RSSL, etc.) shall be transferred between the MAC CPS and the PHY via the PHY SAP.

5.1.2 Management/control plane

The management/control plane shall consist of the Management Information Base (MIB), or optionally consist of the YANG data model (see IEEE 802.1Qcp-2018 and IETF 6020). SNMP is used to communicate with the MIB database and some of its primitives may be used to manage the network entities (BS, CPE, switches, routers, etc.). The MIB primitives shall be used for system configuration, monitoring statistics, notifications, triggers, CPE and session management, Radio Resources Management (RRM), communication with the database service, spectrum sensing and geolocation reporting, etc. The MIB data may be obtained either from the network, predefined within the system, or obtained from another device (e.g., BS) after an exchange of information using SNMP over the communication medium.

5.1.3 Cognitive plane

The cognitive plane shall be comprised of the spectrum sensing function (SSF), the geolocation (GL) function, the spectrum manager/spectrum sensing automaton (SM/SSA) and a dedicated security sublayer 2.

The SSF shall implement spectrum sensing algorithms and the GL module shall provide the information to determine the location of the IEEE 802.22 device (BS or CPE). The SSF and the GL modules are described in 15.2.2 and 15.2.3, respectively.

5.1.3.1 Spectrum Manager (SM)

The SM shall reside in the cognitive plane of the BS at the same layer as the MAC CPS in the data plane as shown in Figure 3. The SM shall maintain spectrum availability information, manage channel lists, manage quiet periods scheduling, and implement coexistence mechanisms. The SM shall also take requests from the MAC/PHY. For example, the MAC must inform the SM if an interference situation has been detected (e.g., with incumbents or other IEEE 802.22 cells) during normal operation in the channel. The SM must then take appropriate actions to resolve the issue such as moving to another channel (as specified in 11.2.3). In order to do this, the SM must first provide sufficient quiet period time for the CPEs to carry out in-band sensing (on channels N and N±1) to clear these channels within the specified channel monitoring requirement (see Annex A), and then keep an updated list of backup and candidate channels in a prioritized order and make sure that the CPEs have enough idle time to clear a sufficient number of backup channels. If an incumbent is found from the in-band sensing, the MAC shall use the informed response from the SM to perform the switching operation.

The SM has a key role in the overall architecture as it is the central point at the BS where all the information on the spectrum availability resulting from the database service and the spectrum sensing function is gathered. Based on this combined information, local regulations, and predefined SM policies (as specified in 11.2.5), the SM shall provide the necessary configuration information to the MAC, which shall remotely configure all the registered CPEs. Explicit connections B_1 and B_2 are shown in Figure 3. This signifies that different kinds of information are exchanged between the SM and the MAC, and the SM and the MIBs. Connection B2 shall be used for configuration of the SM at the BS, transmission of the available channel list to the SM, as well as reporting the RF environment information via the MIBs. Connection B_1 shall be used by the SM to initiate channel move, to configure the SSA at the CPE (backup/candidate channel list, specific channels to be sensed, etc.) as well as to gather information from the CPEs (local sensing information, local geolocation information, etc.).

The functions of the SM are described in 11.2.

Copyright © 2020 IEEE. All rights reserved.

Documents
Document Sharing Hub

Authorized licensed use limited to: Tsinghua University. Downloaded on February 26,2026 at 08:39:27 UTC from IEEE Xplore. Restrictions apply.

Full document details: ISO/IEC/IEEE 8802-22-2021

5.1.3.2 Spectrum Sensing Automaton (SSA)

A simpler spectrum management entity, called Spectrum Sensing Automaton, is present at the BS and at the CPEs and independently implements specific procedures for sensing the RF environment at initialization of the BS and before the registration of a CPE with the BS. The SSA at the CPE shall also include essential features to allow proper operation when the CPE is not under the control of a BS such as independent procedures during initialization and channel change and, while the CPE is idle, the SSA shall conduct out-of-band sensing and report to the BS so that it can refresh the status of the channels in the backup/candidate channel list. At any other time, the SSA at the CPE is under the control of the SM. The SSA at the BS is also active when the BS is not transmitting to conduct out-of-band sensing. The SSA located at the BS can also carry-out sensing to clear channels when the BS is not transmitting. The functions of the SSA are described in 11.3.

Explicit connections C_1 and C_2 at the CPE are shown in Figure 4. Connection C_2 shall be used to convey the environment monitoring information (e.g., list of service providers detected) via the MIBs to the CPE local interface in order to allow for the choice of the WRAN service by a professional installer through upper layers at the CPE. Connection C_1 shall be used to convey the local environment information such as sensing and geolocation to the BS.

5.1.3.3 Security sublayer 2

In addition to the security sublayer 1 at the data plane, security sublayer 2 is introduced in the cognitive plane. Security sublayer 2 enhances the security for the cognitive radio based access. The detailed operation of the security sublayers 1 and 2 are described in Clause 8. The functions of the security sublayers 1 and 2 shall help ensure spectrum and service availability; provide data and signal authentication; as well as ensure data, control and management message integrity, confidentiality and non-repudiation. The role of the security sublayer 2 is to provide enhanced protection to the incumbents as well as necessary protection to the IEEE 802.22 systems. If the IEEE 802.22.1 beacon has to be detected in the given regulatory domain and the transmission needs to be authenticated, the security sublayer 2 shall be used along with the security mechanism provided (ECC-based signature) to authenticate this beacon. Similarly, security sublayer 1 shall be used to authenticate a CBP packet originating from a neighboring cell CPE.

5.2 Management reference architecture

IEEE 802.22 network cells consist of a BS and up to 512 CPE devices or groups of devices. IEEE 802.22 networks may contain multiple cells. For multiple cells operation, interfacing with entities for management and control purposes is required. This standard refers to an abstract “black box” Network Control and Management System (NCMS) containing these entities. The NCMS allows the PHY/MAC layers specified in this standard to be independent of the network architecture, the transport network, and the protocols used at the backend and therefore allows greater flexibility. NCMS logically exists at the BS and CPE sides of the radio interface, termed NCMS (BS) and NCMS (CPE) respectively. Any necessary inter-BS coordination is handled through the NCMS (BS).

Figure 5 shows an example of a management reference model for WRANs. This example consists of a Network Management System (NMS), a Network Control System (NCS), and managed nodes. The BS and CPEs shall collect and store the managed objects (see 5.2.4) in the format as defined in the WRAN Management Information Base (MIB). The MIB is defined and specified in Clause 13. The Network Control System contains the service flow and the associated QoS information that is pre-populated in service classes at the BS and instantiated when a CPE requests services.

Interfaces B4 in Figure 3 and C4 in Figure 4 describe the interface between the CPE/BS and the database service. These interfaces are used to register with the database and request a set of available channels. Interfaces B3 in Figure 3 and C3 in Figure 4 describe the interface between the CPE/BS and the NCMS.

Copyright © 2020 IEEE. All rights reserved.

Documents
Document Sharing Hub

Authorized licensed use limited to: Tsinghua University. Downloaded on February 26,2026 at 08:39:27 UTC from IEEE Xplore. Restrictions apply.

Full document details: ISO/IEC/IEEE 8802-22-2021

In the management reference architecture example in Figure 5, management information that is stored in the form of MIBs must be conveyed using SNMP messages. Use of MIBs to define the structure of management information and SNMP to convey this data is optional. If MIBs and the SNMP are not used to store and transport management information, the network operator and device manufacturers will have to specify another means (e.g., YANG data models, see IEEE Std 802.1Qcp-2018 and IETF 6020) to enable management functions. The management information between the CPE and the BS may be carried over a secondary management connection.

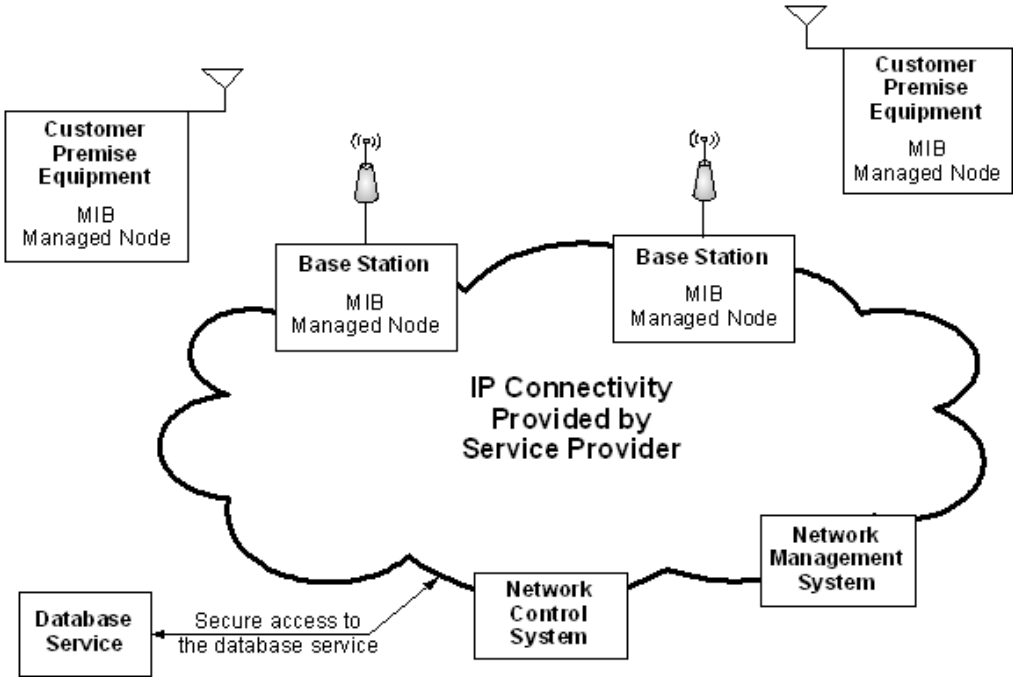

Figure 5—Management reference model

Examples of services that may be provided by the NCMS include: Authentication, Authorization, and Accounting (AAA) services, Radio Resources Management (RRM) services, security services, Service Flow Management services, Location-Based services (LBS) management, and Network Management services.

5.2.1 Service access primitives (SAPs)

In the Management/Control Plane, the NCMS is interfaced to the MAC and PHY layer entities of the CPE and BS through two Service Access Primitives (SAPs). The BS and CPE shall include a Control-SAP (C-SAP) and Management-SAP (M-SAP) that provide NCMS access to the control plane and management plane functions from upper layers. The M-SAP is used for less time-sensitive Management plane primitives, and the C-SAP is used for more time-sensitive Control plane primitives. The C-SAP and M-SAP interfaces are described in 5.2.1.1 and 5.2.1.2. The NCMS uses the C-SAP and M-SAP to interface with the IEEE 802.22 managed nodes.

In the Cognitive Plane, the SM is interfaced with the SSA through two SAPs. The SM uses the SM-SSF SAP to interface with the Spectrum Sensing Function on the SSA and the SM-GL SAP to interface with the geolocation function on the SSA.

5.2.1.1 Management SAP (M-SAP)

The M-SAP may include, but is not limited to primitives related to the following:

Copyright © 2020 IEEE. All rights reserved.

Documents
Document Sharing Hub

Authorized licensed use limited to: Tsinghua University. Downloaded on February 26,2026 at 08:39:27 UTC from IEEE Xplore. Restrictions apply.

Full document details: ISO/IEC/IEEE 8802-22-2021

— System configuration
— Monitoring statistics
— Notifications/triggers
— Sensing and geolocation reporting
— Communication with the database service

5.2.1.2 Control SAP (C-SAP)

The Control SAP may include, but is not limited to primitives related to the following:

— Subscriber and Session management
— Security context management
— Radio Resource Management
— AAA server signaling

5.2.1.3 SM-SSF SAP (SM-SSF-SAP)

The SM-SSF SAP includes, but is not limited to, primitives related to the following:

— Channel Sensing configuration
— Channel Sensing reporting

5.2.1.4 SM-GL SAP (SM-GL-SAP)

The SM-GL SAP includes, but is not limited to, primitives related to the following:

— Geolocation fix calculation request
— Geolocation fix calculation results

5.2.2 Network Reference Model

Figure 6 describes a simplified network reference model. Multiple CPEs may be attached to a BS. CPEs communicate to the BS over the U interface using a Basic Management Connection, a Primary Management Connection, or a Secondary Management Connection (see 7.2).

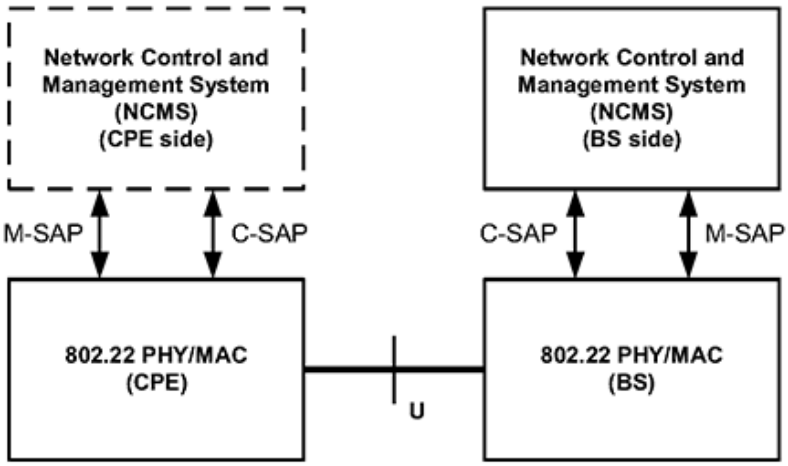

Figure 6—IEEE 802.22 Network Reference Model

Copyright © 2020 IEEE. All rights reserved.

Documents
Document Sharing Hub

Authorized licensed use limited to: Tsinghua University. Downloaded on February 26,2026 at 08:39:27 UTC from IEEE Xplore. Restrictions apply.

Full document details: ISO/IEC/IEEE 8802-22-2021

5.2.3 CPE and BS Interface

This standard observes the following correlation:

— MAC management PDUs that are exchanged on the basic management connection trigger or are triggered by primitives that are exchanged over the C-SAP.

— MAC management PDUs that are exchanged on the primary management connection trigger or are triggered by primitives that are exchanged over either the C-SAP or the M-SAP depending on the particular management or control operation.

— Messages that are exchanged over the secondary management connection trigger or are triggered by primitives that are exchanged over the M-SAP.

5.2.4 Managed objects

Managed information items are also known as “managed objects.” If managed objects are defined as MIBs (see Clause 14), the definition of them shall follow conventions expressed in IETF RFC 2578. It supports a management protocol agnostic approach, including SNMP. If managed objects are not defined as MIBs, use of conventions defined in IETF RFC 2578 to define them is optional; use of SNMP to transport this information is optional as well.

Copyright © 2020 IEEE. All rights reserved.

Documents
Document Sharing Hub

Authorized licensed use limited to: Tsinghua University. Downloaded on February 26,2026 at 08:39:27 UTC from IEEE Xplore. Restrictions apply.

Full document details: ISO/IEC/IEEE 8802-22-2021

6. Packet Convergence sublayer

The Packet Convergence sublayer (CS) resides on top of the MAC Common Part sublayer (CPS). The CS shall perform the following functions using classification governed by rules (see 6.3.2 or 6.4.2) defined by the implementer/operator to process higher layer SDUs so they can be sent and received by the IEEE 802.22 BS and CPE. This process can be broken down into the following four steps, each utilizing the services of the MAC:

— Receiving higher-layer packet protocol data units (PDUs) from the higher layer
— Classifying the higher-layer PDUs into the appropriate connection
— Delivering the resulting CS PDUs to the MAC SAP associated with the service flow for transport to the peer MAC SAP
— Receiving the CS PDUs from the peer MAC SAP

The sending CS is responsible for delivering the MAC SDU to the MAC SAP. The MAC is responsible for delivery of the MAC SDU to peer MAC SAP in accordance with the QoS, fragmentation, concatenation, and other transport functions associated with the service flow characteristics of a particular connection. The receiving CS is responsible for accepting the MAC SDU from the peer MAC SAP and delivering it to a higher-layer entity.

The packet CS is used for transport of the following two packet-based protocols supported by this standard, i.e., IEEE Std 802.3™ (Ethernet) and Internet Protocol (IP).

6.1 MAC SDU format

Once classified and associated with a specific MAC connection, a higher-layer PDU shall be encapsulated in a MAC SDU according to the format illustrated in Figure 7.

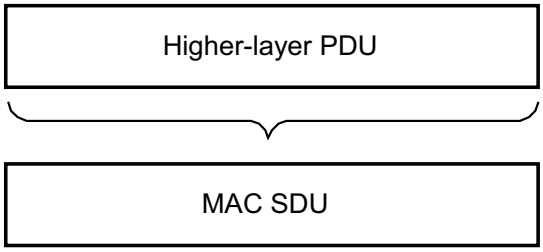

Figure 7—MAC SDU format

6.2 Classification

Classification is the process by which a MAC SDU is mapped onto a particular connection for transmission between MAC peers. The mapping process associates a MAC SDU with a connection, which also creates an association with the service flow characteristics of that connection. This process facilitates the delivery of MAC SDUs with the appropriate QoS constraints.

A classification rule is a set of matching criteria applied to each packet entering the IEEE 802.22 network. It consists of some protocol-specific packet matching criteria (destination IP address, for example), a classification priority, and a reference to a flow type (FT, see 7.2). If a packet matches the specified packet matching criteria, it is then delivered to the SAP for delivery on the connection defined by the FT and the station identifier (SID, see 7.2) assigned to the CPE. Classification rules, which are to be defined by the

Copyright © 2020 IEEE. All rights reserved.

Documents
Document Sharing Hub

Authorized licensed use limited to: Tsinghua University. Downloaded on February 26,2026 at 08:39:27 UTC from IEEE Xplore. Restrictions apply.

Full document details: ISO/IEC/IEEE 8802-22-2021

WRAN operator, shall be downloadable to the BS and CPEs in a uniform and standardized format at the MIB level (see Clause 14) and shall be fully interoperable between the BS and CPEs. The service flow characteristics of the connection provide the QoS for that packet.

Several classification rules may each refer to the same service flow. The classification priority is used for ordering the application of classification rules to packets. Explicit ordering is necessary because the patterns used by classification rules may overlap. The priority needs not be unique, but care shall be taken within a classification priority to prevent ambiguity in classification. Downstream classification rules are applied by the BS to packets that it transmits and upstream classification rules are applied at the CPE. Figure 8 and Figure 9 illustrate the mappings discussed in the previous paragraph.

It is possible for a packet to fail to match the set of defined classification rules. In this case, the CS shall discard the packet.

The parameters for the classification rules shall be provided as MIB objects at the BS (see 14.1.3) and these parameters shall be downloaded from the BS to its associated CPEs for interoperability and consistency.

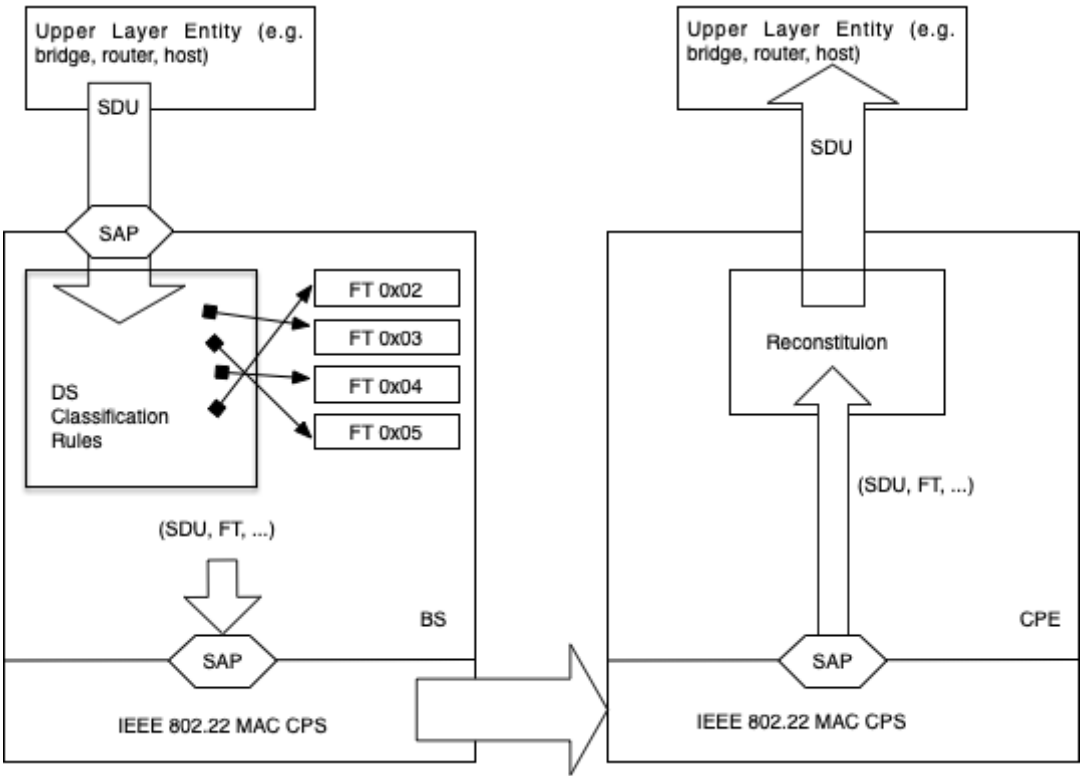

Figure 8—Classification and FT mapping (BS to CPE)

Copyright © 2020 IEEE. All rights reserved.

Documents
Document Sharing Hub

Authorized licensed use limited to: Tsinghua University. Downloaded on February 26,2026 at 08:39:27 UTC from IEEE Xplore. Restrictions apply.

Full document details: ISO/IEC/IEEE 8802-22-2021

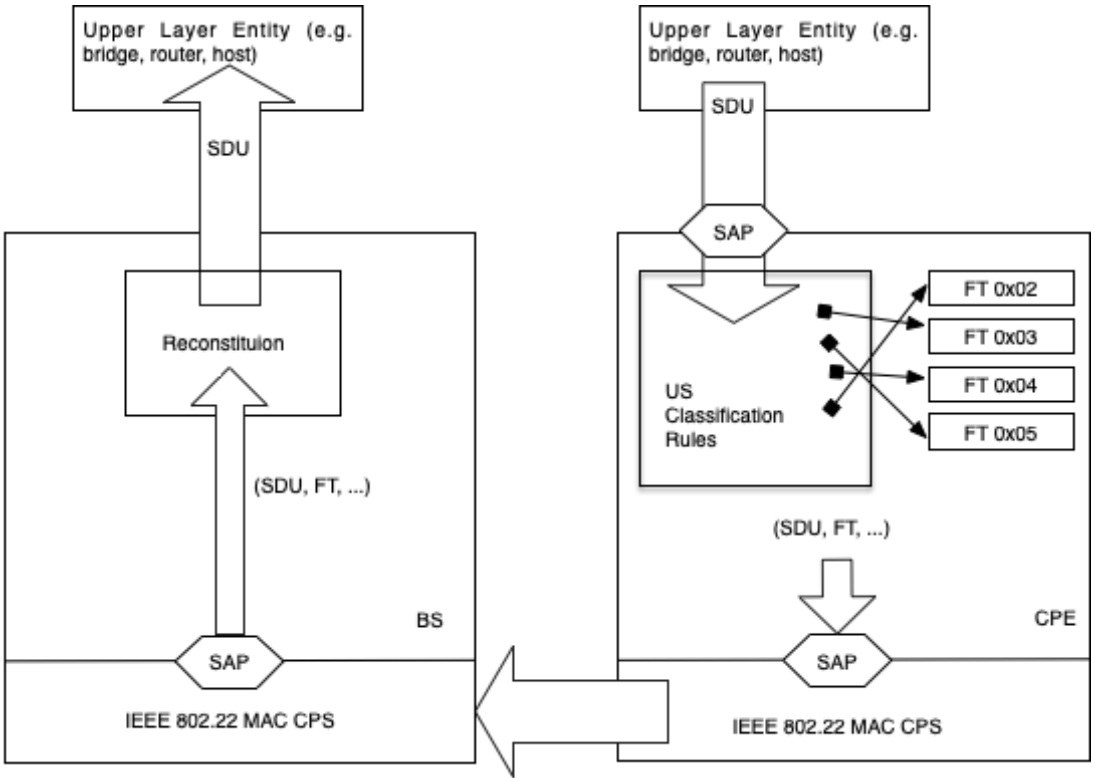

Figure 9—Classification and FT mapping (CPE to BS)

6.3 IEEE 802.3/Ethernet-specific part

6.3.1 IEEE 802.3/Ethernet CS PDU format

An IEEE 802.3/Ethernet packet PDU is directly mapped to a CS PDU (MAC SDU).

6.3.2 IEEE 802.3/Ethernet CS classification rules

The following parameters are relevant for IEEE 802.3/Ethernet CS classification rules:

— IEEE 802.3/Ethernet and VLAN headers shall be processed by zero or more of the LLC classification parameters (see 7.9.8.9.18.3.2 to 7.9.8.9.18.3.12)

— For IP over IEEE 802.3/Ethernet, IP headers may be included in classification (see 7.9.8.9.18.3.2 to 7.9.8.9.18.3.7 and 7.9.8.9.18.3.14)

— For IP headers compressed with ROHC (IETF RFC 3095 [B27], IETF RFC 3749 [B31], IETF RFC 3243 [B28], IETF RFC 4995 [B36], IETF RFC 3843 [B32], IETF RFC 4996 [B37]) only the LLC parameters shall be used for classification (see 7.9.8.9.18.3.8 through 7.9.8.9.18.3.12).

Use of IP header compression (ROHC) is negotiated during registration (REG-REQ/RSP) and enabled during service flow setup.

Copyright © 2020 IEEE. All rights reserved.

Documents
Document Sharing Hub

Authorized licensed use limited to: Tsinghua University. Downloaded on February 26,2026 at 08:39:27 UTC from IEEE Xplore. Restrictions apply.

Full document details: ISO/IEC/IEEE 8802-22-2021

6.4 IP specific part

This subclause applies when IP (IETF RFC 791 [B17], IETF RFC 2460 [B23]) is carried over the IEEE 802.22 network.

IPv6 CS requirements are only applicable if IPv6 support is enabled during registration.

6.4.1 IP CS PDU format

An IP packet PDU is directly mapped to a CS PDU (MAC SDU).

6.4.2 IP classification rules

IP classification rules operate on the fields of the IP header and the transport protocol. Classification rules shall be the same as long as the MIB is defined. Classification rules will be downloaded from the BS to its associated CPEs for interoperability and consistency (see 6.2). IP classification rules shall be based on the IP classification parameters (see 7.9.8.9.18.3.2 through 7.9.8.9.18.3.7 and 7.9.8.9.18.3.14).

Copyright © 2020 IEEE. All rights reserved.

Documents
Document Sharing Hub

Authorized licensed use limited to: Tsinghua University. Downloaded on February 26,2026 at 08:39:27 UTC from IEEE Xplore. Restrictions apply.

Full document details: ISO/IEC/IEEE 8802-22-2021

7. MAC Common Part sublayer

This clause describes the MAC layer used by the IEEE 802.22 WRAN point-to-multipoint medium access control standard and the IEEE 802.22b advanced WRAN (A-WRAN) multi-hop relay medium access control standard. The MAC provides tools for protection of TV bands incumbent services as well as for coexistence. The A-WRAN MAC provides all functionalities of the WRAN MAC and additionally supports multi-hop relay operations, multiple channel operations, multiple-input-multiple-output (MIMO) operations, etc. Both WRAN and A-WRAN MACs are connection-oriented and provide flexibility in terms of QoS support. The WRAN MAC and the A-WRAN MAC regulate downstream (DS) medium access by TDM (time division multiplex), and the upstream (US) is managed by using a DAMA/OFDMA system. In the WRAN MAC, the BS manages all the activities within its IEEE 802.22 cell, and the associated CPEs are under the control of the BS. In the A-WRAN MAC, the A-BS manages all the activities within its cell and the associated A-CPEs/R-CPEs under the control of the A-BS.

7.1 General

In an IEEE 802.22 WRAN cell, multiple CPEs are managed by a single BS that controls the medium access. The DS is TDM where the BS transmits and the CPE receives. The US transmissions, where the CPEs transmit and the BS receives, are shared by CPEs on a demand basis, according to a DAMA/OFDMA scheme. Depending on the class of service (CoS) utilized, a CPE may be issued continuing rights to transmit, or is dynamically allocated by the BS after receipt of a request from the CPE. The MAC supports unicast (addressed to a single CPE), multicast (addressed to a group of CPEs) and broadcast (addressed to all CPEs in a cell) services.

In an A-WRAN cell consisting of A-CPEs and R-CPEs, all R-CPEs and multiple A-CPEs are managed by a single A-BS, and other A-CPEs are managed by distributed scheduling R-CPEs. The DS is TDM where the A-BS transmits and the A-CPEs/R-CPEs receive. The US transmissions, where the A-CPEs/R-CPEs transmit and the A-BS receives, are shared by the A-CPEs/R-CPEs on a demand basis, according to a DAMA/OFDMA scheme. Within a local cell consisting of a distributed scheduling R-CPE and A-CPEs, multiple A-CPEs are managed by the distributed scheduling R-CPE. The DS within a local cell is TDM where the distributed scheduling R-CPE transmits and the A-CPEs receive. The US transmissions within a local cell, where the A-CPEs transmit and the distributed scheduling R-CPE receives, are shared by the A-CPEs on a demand basis, according to a DAMA/OFDMA scheme.

Both WRAN MAC and A-WRAN MAC implement~~s~~ a combination of access schemes that efficiently control contention between CPEs within a cell and overlapping cells sharing the same channel while at the same time attempting to meet the latency and bandwidth requirements of each user application. This is accomplished through four different types of US scheduling mechanisms that are implemented using unsolicited bandwidth grants, polling, and two contention procedures (i.e., MAC header and CDMA based). The use of polling simplifies the access operation and attempts to allow applications to receive service on a deterministic basis if it is required.

Both WRAN MAC and A-WRAN MAC are connection-oriented, and as such, connections are a key component that require active maintenance and hence can be dynamically created, deleted, and changed as the need arises. A connection defines both the mapping between convergence processes at CPEs and BS or the mapping between the A-BS and the related service flow (one connection per service flow). For the purposes of mapping to services on CPEs and associating varying levels of QoS, all data communications are instantiated in the context of a connection, and this provides a mechanism for US and DS QoS management. In particular, the QoS parameters are integral to the bandwidth allocation process as the CPE requests US bandwidth on a per connection basis (implicitly identifying the service flow). In the WRAN MAC the BS, grants bandwidth to a CPE as an aggregate of grants in response to per-connection requests from the CPE. In the A-WRAN MAC, the A-BS or distributed scheduling R-CPE grants bandwidth to an A-CPE as an aggregate of grants in response to per-connection requests from the A-CPE.

Copyright © 2020 IEEE. All rights reserved.

Documents
Document Sharing Hub

Authorized licensed use limited to: Tsinghua University. Downloaded on February 26,2026 at 08:39:27 UTC from IEEE Xplore. Restrictions apply.

Full document details: ISO/IEC/IEEE 8802-22-2021