ISO/IEC TR 11801-9903

Edition 1.0 2015-10

TECHNICAL REPORT

colour inside

Information technology – Generic cabling systems for customer premises – Part 9903: Matrix modelling of channels and links

Documents
Document Sharing Hub

ISO/IEC TR 11801-9903:2015-10(en)

Full document details: ISO_IEC TR 11801-9903_2015

THIS PUBLICATION IS COPYRIGHT PROTECTED

Copyright © 2015 ISO/IEC, Geneva, Switzerland

All rights reserved. Unless otherwise specified, no part of this publication may be reproduced or utilized in any form or by any means, electronic or mechanical, including photocopying and microfilm, without permission in writing from either IEC or IEC's member National Committee in the country of the requester. If you have any questions about ISO/IEC copyright or have an enquiry about obtaining additional rights to this publication, please contact the address below or your local IEC member National Committee for further information.

IEC Central Office
3, rue de Varembé
CH-1211 Geneva 20
Switzerland

Tel.: +41 22 919 02 11
Fax: +41 22 919 03 00
info@iec.ch
www.iec.ch

About the IEC
The International Electrotechnical Commission (IEC) is the leading global organization that prepares and publishes International Standards for all electrical, electronic and related technologies.

About IEC publications
The technical content of IEC publications is kept under constant review by the IEC. Please make sure that you have the latest edition, a corrigenda or an amendment might have been published.

IEC Catalogue - webstore.iec.ch/catalogue
The stand-alone application for consulting the entire bibliographical information on IEC International Standards, Technical Specifications, Technical Reports and other documents. Available for PC, Mac OS, Android Tablets and iPad.

IEC publications search - www.iec.ch/searchpub
The advanced search enables to find IEC publications by a variety of criteria (reference number, text, technical committee,…). It also gives information on projects, replaced and withdrawn publications.

IEC Just Published - webstore.iec.ch/justpublished
Stay up to date on all new IEC publications. Just Published details all new publications released. Available online and also once a month by email.

Electropedia - www.electropedia.org
The world's leading online dictionary of electronic and electrical terms containing more than 30 000 terms and definitions in English and French, with equivalent terms in 15 additional languages. Also known as the International Electrotechnical Vocabulary (IEV) online.

IEC Glossary - std.iec.ch/glossary
More than 60 000 electrotechnical terminology entries in English and French extracted from the Terms and Definitions clause of IEC publications issued since 2002. Some entries have been collected from earlier publications of IEC TC 37, 77, 86 and CISPR.

IEC Customer Service Centre - webstore.iec.ch/csc
If you wish to give us your feedback on this publication or need further assistance, please contact the Customer Service Centre: csc@iec.ch.

AVA Documents
Document Sharing Hub

Full document details: ISO_IEC TR 11801-9903_2015

ISO/IEC TR 11801-9903

Edition 1.0 2015-10

TECHNICAL REPORT

colour inside

Information technology – Generic cabling systems for customer premises – Part 9903: Matrix modelling of channels and links

INTERNATIONAL
ELECTROTECHNICAL
COMMISSION

ICS 35.200

ISBN 978-2-8322-2923-1

Warning! Make sure that you obtained this publication from an authorized distributor.

Documents
Document Sharing Hub

Full document details: ISO_IEC TR 11801-9903_2015

CONTENTS

FOREWORD 4
INTRODUCTION 6
1 Scope 8
2 Normative references 8
3 Terms, definitions and abbreviations 8
3.1 Terms and definitions 8
3.2 Abbreviations 9
4 Matrix model 9
5 Matrix definition 10
5.1 Quadriports 10
5.2 Matrix port definition for a two pair system representative for modelling purposes 10
5.3 Operational scattering matrix 10
5.4 General naming convention 11
5.5 S-Matrix 11
5.6 Passivity 12
5.7 Operational reflexion loss matrix 12
5.8 Transmission matrix (T-matrix) 13
5.9 S-matrix of cabling 13
6 Calculation with matrices using limit lines 13
7 Extracting limit lines 14
7.1 General 14
7.2 Equations to extract the cabling limit lines 14
7.2.1 Operational attenuation 14
7.2.2 Near end crosstalk 15
7.2.3 Attenuation to far end crosstalk ratio 15
7.2.4 Reflection 15
8 Component values to be used as input to the model 15
8.1 General 15
8.2 Cable 16
8.2.1 General 16
8.2.2 Wave attenuation 16
8.2.3 Near end crosstalk 16
8.2.4 Far end crosstalk 16
8.2.5 Reflection 16
8.3 Connections 17
8.3.1 General 17
8.3.2 As point source of disturbance 17
8.3.3 As a transmission line 18
Annex A (informative) S to T and T to S-matrix conversion formulas 19
A.1 Overview 19
A.2 Formulas 19
Annex B (informative) Calculation examples 20
B.1 Overview 20
B.2 Component assumptions for modelling purposes 20

AVA Documents
Document Sharing Hub
Full document details: ISO_IEC TR 11801-9903_2015

B.2.1 Cables 20
B.2.2 Connections 21
B.3 Model results 21
B.3.1 General 21
B.3.2 Insertion loss 21
B.3.3 NEXT 22
B.3.4 ACR-F 22
B.3.5 Return loss 22
Annex C (informative) Terms and definitions 23
C.1 Comparison of namings 23
C.2 General 24
C.3 Background of terms and definitions 24
C.3.1 Operational attenuation 24
C.3.2 Operational transfer function (T_B) 26
C.3.3 Image or wave transfer function (T) 26
C.3.4 Insertion transfers function of a two-port (T_{BI}) 26
C.3.5 Insertion transfer function (T_{BI}) measured with a NWA 26
C.3.6 Operational reflection loss transfer function ($T_{ref} = S_{ref}$) of a junction 26
Bibliography 28

Figure 1 – Link configurations of ISO/IEC 11801:2002 6
Figure 2 – Matrix definition of a 4 port 2 twisted pair system 10
Figure 3 – Operational scattering parameters example from port 2 11
Figure 4 – All 4 ports operational scattering parameter definition 11
Figure 5 – S-Matrix definition showing corresponding S parameters 11
Figure 6 – Equal S parameters for real components 12
Figure 7 – Final operational scattering matrix for real components 12
Figure 8 – Definition of the operational reflection loss matrix with unitarity included (see C.3.6) 13
Figure 9 – Transmission matrix concatenation showing an example of a 2 connector permanent link 13
Figure 10 – Graphical example of a $NEXT$-L calculation showing statistical results (red) and final calculation (blue) 14
Figure 11 – 100 m cable return loss without reflection at both ends 17
Figure 12 – 100 m cable return loss with a reflection of 0,03 at both ends (6 Ω mismatch, ~23 dB return loss at 1 MHz) 17
Figure C.1 – Defining the operational attenuation and the operational transfer functions of a two-port 25
Figure C.2 – Defining the reflection transfer functions and the return loss of a junction 27

Table B.1 – Modelling assumptions for cable transmission parameters 20
Table B.2 – Modelling assumptions for connection transmission parameters 21
Table B.3 – Insertion loss 21
Table B.4 – NEXT 22
Table B.5 – ACR-F 22
Table B.6 – Return loss 22
Table C.1 – Comparison of naming in ISO/IEC 11081:2002 and this technical report 23
AVA Documents
Document Sharing Hub
Full document details: ISO_IEC TR 11801-9903_2015

© ISO/IEC 2015

INFORMATION TECHNOLOGY – GENERIC CABLING SYSTEMS FOR CUSTOMER PREMISES –

Part 9903: Matrix modelling of channels and links

FOREWORD

1) ISO (the International Organization for Standardization) and IEC (the International Electrotechnical Commission) form the specialized system for worldwide standardization. National bodies that are members of ISO or IEC participate in the development of International Standards through technical committees established by the respective organization to deal with particular fields of technical activity. ISO and IEC technical committees collaborate in fields of mutual interest. Other international organizations, governmental and non-governmental, in liaison with ISO and IEC, also take part in the work. In the field of information technology, ISO and IEC have established a joint technical committee, ISO/IEC JTC 1.

2) The formal decisions or agreements of IEC and ISO on technical matters express, as nearly as possible, an international consensus of opinion on the relevant subjects since each technical committee has representation from all interested IEC National Committees and ISO member bodies.

3) IEC, ISO and ISO/IEC publications have the form of recommendations for international use and are accepted by IEC National Committees and ISO member bodies in that sense. While all reasonable efforts are made to ensure that the technical content of IEC, ISO and ISO/IEC publications is accurate, IEC or ISO cannot be held responsible for the way in which they are used or for any misinterpretation by any end user.

4) In order to promote international uniformity, IEC National Committees and ISO member bodies undertake to apply IEC, ISO and ISO/IEC publications transparently to the maximum extent possible in their national and regional publications. Any divergence between any ISO, IEC or ISO/IEC publication and the corresponding national or regional publication should be clearly indicated in the latter.

5) ISO and IEC do not provide any attestation of conformity. Independent certification bodies provide conformity assessment services and, in some areas, access to IEC marks of conformity. ISO or IEC are not responsible for any services carried out by independent certification bodies.

6) All users should ensure that they have the latest edition of this publication.

7) No liability shall attach to IEC or ISO or its directors, employees, servants or agents including individual experts and members of their technical committees and IEC National Committees or ISO member bodies for any personal injury, property damage or other damage of any nature whatsoever, whether direct or indirect, or for costs (including legal fees) and expenses arising out of the publication of, use of, or reliance upon, this ISO/IEC publication or any other IEC, ISO or ISO/IEC publications.

8) Attention is drawn to the normative references cited in this publication. Use of the referenced publications is indispensable for the correct application of this publication.

9) Attention is drawn to the possibility that some of the elements of this ISO/IEC publication may be the subject of patent rights. ISO and IEC shall not be held responsible for identifying any or all such patent rights.

The main task of IEC technical committees is to prepare International Standards. However, a technical committee may propose the publication of a technical report when it has collected data of a different kind from that which is normally published as an International Standard, for example "state of the art".

ISO/IEC TR 11801-9903, which is a technical report, has been prepared by subcommittee 25: Interconnection of information technology equipment, of ISO/IEC joint technical committee 1: Information technology.

The list of all currently available parts of the ISO/IEC 11801 series, under the general title *Information technology – Generic cabling for customer premises*, can be found on the IEC web site.

This Technical Report has been approved by vote of the member bodies, and the voting results may be obtained from the address given on the second title page.

Documents
Document Sharing Hub

Full document details: ISO_IEC TR 11801-9903_2015

© ISO/IEC 2015

This publication has been drafted in accordance with the ISO/IEC Directives, Part 2.

IMPORTANT – The 'colour inside' logo on the cover page of this publication indicates that it contains colours which are considered to be useful for the correct understanding of its contents. Users should therefore print this document using a colour printer.

Documents
Document Sharing Hub

Full document details: ISO_IEC TR 11801-9903_2015

INTRODUCTION

The pass/fail limits for defined channel and permanent link cabling configurations have an implicit impact on the component limits for the cabling components used. The channel configurations are described in Clause 5, the link configurations in Clause 6 of ISO/IEC 11801:2002 with its amendments 1:2008 and 2:2010.

The permanent link configurations, which represent the fixed portion of the cabling, have two possible topologies:

A connection plus a segment of cable plus a connection (2 connector topology).

A connection plus a segment of cable plus a connection plus another segment of cable plus another connection (3 connector topology).

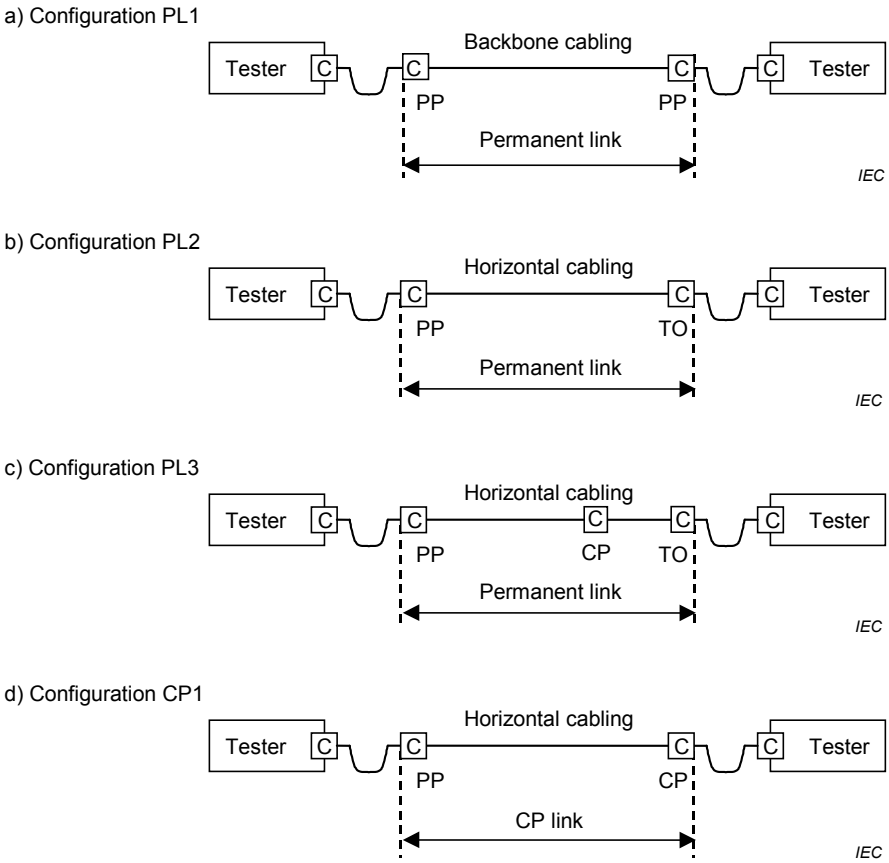

PP = patch panel; C = connection; CP = consolidation point;

TO = telecommunications outlet

Figure 1 – Link configurations of ISO/IEC 11801:2002

This Technical Report includes models and assumptions, which support pass/fail limits for the channel and permanent link test configurations in this standard. These are based on the performance requirements of cable and connecting hardware as specified in IEC standards.

This Technical Report provides reasonable assurance that a channel created by adding compliant patch cords to a previously certified permanent link will meet the applicable channel performance limits.

Documents
Document Sharing Hub
Full document details: ISO_IEC TR 11801-9903_2015

Over the years the frequencies of the classes increased, but the theory for calculating the limits stayed the same. Especially the higher order effects had to be considered and at the end only by doing a Monte Carlo calculation, assuming that not all components would be at the limit at the same time, allowed to prove compliance.

The model uses 2 pairs for all calculations. The limits are equal for pairs or pair combinations but in reality measured values could be different. If results are required that need more pairs to be considered, then this calculation can be done based on the results from multiple 2 pair calculations with appropriate inputs (worst case). An example of such a calculation is the power sum and average limit lines for 4 pairs.

Symmetry and additional contributions that result from unbalanced signals and differential-to-common and common-to-differential mode coupling are not included in this Technical Report but can be added easily in a next step by increasing the matrix size.

For details on the naming of transmission parameters, see definitions and Clause C.1.

Documents
Document Sharing Hub

Full document details: ISO_IEC TR 11801-9903_2015

© ISO/IEC 2015

INFORMATION TECHNOLOGY – GENERIC CABLING SYSTEMS FOR CUSTOMER PREMISES –

Part 9903: Matrix modelling of channels and links

1 Scope

This part of ISO/IEC 11801 establishes a matrix-model for formulating limits for differential mode parameters for return loss, insertion loss, and near and far end crosstalk, within and between two pairs of balanced cabling. This is for the purpose of supporting new, improved balanced cabling channel and link specifications, which are expected to be included in the next edition of ISO/IEC 11801[1].

2 Normative references

The following documents, in whole or in part, are normatively referenced in this document and are indispensable for its application. For dated references, only the edition cited applies. For undated references, the latest edition of the referenced document (including any amendments) applies.

ISO/IEC 11801:2002, *Information technology – Generic cabling for customer premises*
Amendment 1:2008
Amendment 2:2010[2]

3 Terms, definitions and abbreviations

3.1 Terms and definitions

For the purposes of this document, the terms and definitions given in ISO/IEC 11801 and the following apply.

3.1.1
attenuation
general term to indicate diminishing of signal strength

Note 1 to entry: Details need to be added to indicate the exact usage.

3.1.2
connection
two mated connectors

EXAMPLE: Jack and plug.

3.1.3
image attenuation
wave attenuation
attenuation when a two-port is terminated by its input and output characteristic impedances with no reflections at input and output

Note 1 to entry: The wave attenuation of cables is length scalable.

---

[1] A new edition of ISO/IEC 11801 is under consideration and is planned as ISO/IEC 11801-1 (first edition).

[2] A consolidated version of this publication exists, comprising ISO/IEC 11801:2002, ISO/IEC 11801:2002/AMD 1:2008 and ISO/IEC 11801:2002/AMD 2:2010.

Documents
Document Sharing Hub

Full document details: ISO_IEC TR 11801-9903_2015