ISO/IEC TR 14165-117

Edition 1.0 2007-09

TECHNICAL REPORT

Information technology – Fibre channel – Part 117: Methodologies for jitter and signal quality (MJSQ)

ISO/IEC TR 14165-117:2007(E)

Documents
Document Sharing Hub

Full document details: ISO IEC TR 14165-117-2007

THIS PUBLICATION IS COPYRIGHT PROTECTED

Copyright © 2007 ISO/IEC, Geneva, Switzerland

All rights reserved. Unless otherwise specified, no part of this publication may be reproduced or utilized in any form or by any means, electronic or mechanical, including photocopying and microfilm, without permission in writing from either IEC or IEC's member National Committee in the country of the requester.

If you have any questions about ISO/IEC copyright or have an enquiry about obtaining additional rights to this publication, please contact the address below or your local IEC member National Committee for further information.

IEC Central Office
3, rue de Varembé
CH-1211 Geneva 20
Switzerland
Email: inmail@iec.ch
Web: www.iec.ch

About the IEC

The International Electrotechnical Commission (IEC) is the leading global organization that prepares and publishes International Standards for all electrical, electronic and related technologies.

About IEC publications

The technical content of IEC publications is kept under constant review by the IEC. Please make sure that you have the latest edition, a corrigenda or an amendment might have been published.

- Catalogue of IEC publications: www.iec.ch/searchpub
The IEC on-line Catalogue enables you to search by a variety of criteria (reference number, text, technical committee,…). It also gives information on projects, withdrawn and replaced publications.

- IEC Just Published: www.iec.ch/online_news/justpub
Stay up to date on all new IEC publications. Just Published details twice a month all new publications released. Available on-line and also by email.

- Electropedia: www.electropedia.org
The world's leading online dictionary of electronic and electrical terms containing more than 20 000 terms and definitions in English and French, with equivalent terms in additional languages. Also known as the International Electrotechnical Vocabulary online.

- Customer Service Centre: www.iec.ch/webstore/custserv
If you wish to give us your feedback on this publication or need further assistance, please visit the Customer Service Centre FAQ or contact us:

Email: csc@iec.ch
Tel.: +41 22 919 02 11
Fax: +41 22 919 03 00

Documents
Document Sharing Hub

Full document details: ISO IEC TR 14165-117-2007

ISO/IEC TR 14165-117

Edition 1.0 2007-09

TECHNICAL REPORT

Information technology – Fibre channel – Part 117: Methodologies for jitter and signal quality (MJSQ)

INTERNATIONAL ELECTROTECHNICAL COMMISSION

PRICE CODE XE

ICS 35.000

ISBN 2-8318-9290-2

Documents
Document Sharing Hub

Full document details: ISO IEC TR 14165-117-2007

Contents

Foreword 14

1 Scope 17
2 Normative references 18
2.1 Approved references 18
2.2 Other references 18
3 Definitions and conventions 18
3.1 Overview 18
3.2 Conventions 18
3.3 Keywords 19
3.4 Acronyms 19
3.5 Terms and definitions 20
4 Background for MJSQ 27
4.1 Overview 27
4.2 Relationship to SONET and receiver tolerance requirements 27
4.3 Relationship to earlier FC standards 28
4.4 Traditional measurement methodology risks 29
5 Jitter overview 30
5.1 Serial transmissions 30
5.2 Jitter output context 31
5.3 Jitter tolerance context 32
5.4 Jitter assumptions summary 32
5.5 FC-0 and MJS(-1) interface overview 32
5.6 Fibre channel physical architecture 33
6 Jitter fundamentals 37
6.1 Purpose of addressing all important signal levels 37
6.2 Essential properties of signals 37
6.2.1 Introduction 37
6.2.2 Signal amplitude versus signal level 37
6.2.3 Time, timing reference and jitter timing reference 37
6.2.4 Considerations when using hardware based jitter timing references 38
6.2.5 Jitter and noise relationship 38
6.2.6 Rising edges and falling edges 39
6.3 Number of events per bit-period 39
6.4 Statistical distribution at a specific signal level 41
6.5 Basic relationships within statistical jitter distributions 41
6.5.1 Overview 41
6.5.2 Description of mathematical model 43
6.5.3 Relationship between jitter and BER for random jitter distributions 44
6.5.4 Effects of changing the standard deviation for Gaussian PDF's 46
6.5.5 Common mistakes relating to statistical properties of measurements. 46
6.5.6 Addition of deterministic jitter 46
6.6 Jitter eye mask methodology for signal quality specification 49
6.7 Signal measurements versus jitter eye mask signal quality specifications 51
6.8 Jitter timing reference at different signal levels during data acquisition 52
6.9 Example of a 2-dimensional jitter measurement 52
6.10 Jitter timing reference frequency response requirements 53
6.10.1 Overview 53
6.10.2 Performance specification for a hardware implementation of a Golden PLL 59
6.11 Jitter frequency concepts 62
6.12 Jitter output measurement methodologies 63
6.12.1 Time domain 63
6.12.2 Frequency domain 63
6.13 Effects of varying jitter distributions on BER 63

Documents
Document Sharing Hub
Full document details: ISO IEC TR 14165-117-2007

6.14 Methodology for jitter and signal quality specification for “processed” signals . . . 64
6.14.1 Background . . . 64
6.14.2 Link components that contain compensation properties (equalization) . . . 64
6.14.2.1 Compensation . . . 64
6.14.2.2 Transmitter compensation . . . 65
6.14.2.3 Interconnect compensation . . . 66
6.14.2.4 Receiver compensation . . . 66
6.15 Determination of compliance . . . 67
6.16 Extremely stressful data patterns and scrambling . . . 68
7 Jitter causes and jitter distribution . . . 68
7.1 Jitter contribution elements . . . 68
7.2 Jitter distribution . . . 68
7.2.1 Basic types - Bounded and unbounded, correlated and uncorrelated . . . 68
7.2.2 Unbounded (definition, concept, quantitative description) . . . 70
7.2.3 Bounded (definition, concept, quantitative description) . . . 70
7.2.3.1 Overview . . . 70
7.2.3.2 Duty cycle distortion (correlated) . . . 70
7.2.3.3 Data dependent (correlated) . . . 70
7.2.3.3 1 Overview . . . 70
7.2.3.3 2 Dispersion induced jitter . . . 71
7.2.3.3 3 Reflection induced jitter . . . 71
7.2.3.3 4 Baseline wander induced jitter . . . 71
7.2.3.3 5 High probability DDJ . . . 71
7.2.3.3 6 Low probability DDJ . . . 71
7.2.3.4 Uncorrelated DJ . . . 71
7.2.3.4 1 Overview . . . 71
7.2.3.4 2 Power supply noise . . . 72
7.2.3.4 3 Crosstalk / external noise . . . 72
7.2.3.4 4 Applied sinusoidal . . . 72
7.2.4 Residual jitter and variance record . . . 72
7.2.5 Summary of jitter taxonomy . . . 73
8 Calculation of jitter compliance values (level 1) . . . 73
8.1 Overview - Separation of jitter components . . . 73
8.2 Examples comparing level 1 DJ with peak-to-peak DJ . . . 75
8.3 Methodology details for calculating level 1 DJ and level 1 TJ . . . 78
9 Basic data forms, analysis and separation of jitter components . . . 79
9.1 Overview . . . 79
9.1.1 Introduction . . . 79
9.1.2 Basic data forms . . . 79
9.1.3 Data analysis methods . . . 79
9.1.4 Summary of overview . . . 80
9.1.5 Organization of the document relating to material introduced in clause 9. . . . 82
9.2 Best fit of tails of histograms . . . 82
9.2.1 Introduction . . . 82
9.2.2 Tail fit jitter analysis method example . . . 84
9.2.2.1 Jitter separation through tail fit . . . 84
9.2.2.2 Tail fit accuracy . . . 85
9.2.2.3 Tail fit application in serial data communication . . . 86
9.2.2.4 DJ and RJ measurement (level 2) . . . 87
9.2.2.5 Level 1 CDF measurement . . . 87
9.3 Frequency spectrum method . . . 88
10 Signal quality measurement methodologies . . . 89
10.1 Overview . . . 89
10.1.1 Non-jitter properties of signal quality . . . 89
10.1.2 Overview of jitter related signal quality measurement methods . . . 89
10.1.3 Accuracy and verification considerations . . . 90
10.1.3.1 Accuracy . . . 90

Documents
Document Sharing Hub
Full document details: ISO IEC TR 14165-117-2007

10.1.3.2 Verification . . . 90
10.1.3.2 1 Overview . . . 90
10.1.3.2 2 BERT method . . . 90
10.1.3.2 3 Calibrated signal source method . . . 90
10.1.4 Summary of signal quality measurement methods . . . 91
10.2 Equivalent time oscilloscope methods . . . 94
10.2.1 Introduction . . . 94
10.2.2 Equivalent time sampling . . . 95
10.2.2.1 Overview . . . 95
10.2.2.2 Asychronous equivalent time sampling . . . 96
10.2.2.3 Sequential equivalent time sampling . . . 96
10.2.3 Waveform eye mask measurements . . . 97
10.2.4 Repeated pattern measurement using an equivalent time oscilloscope . . . 98
10.3 Enhanced equivalent time oscilloscope . . . 99
10.3.1 Overview . . . 99
10.3.2 Signal edge models . . . 100
10.3.3 Periodic jitter frequency analysis beyond the Nyquist rate . . . 100
10.3.4 General process for extracting the CDF . . . 101
10.3.4.1 Overview . . . 101
10.3.4.2 Correlated Jitter . . . 101
10.3.4.3 Uncorrelated Jitter . . . 101
10.3.4.4 Aggregate Deterministic Jitter (DJ) . . . 102
10.3.5 Level 1 CDF output . . . 102
10.4 BERT scan . . . 103
10.4.1 Basic BERT scan . . . 103
10.4.2 Alternate combined process to extract level 1 DJ and TJ . . . 104
10.4.3 BERT eye contour measurements . . . 105
10.4.4 BERT with reference channel . . . 106
10.5 Time interval analysis . . . 107
10.5.1 Introduction . . . 107
10.5.2 Jitter measurements with a “bit clock” (level 1) . . . 108
10.5.3 Jitter measurements with a “pattern marker” (level 1) . . . 109
10.5.4 Jitter measurements with ‘no clock and no marker’ (level 2) . . . 113
10.5.4.1 Overview . . . 113
10.5.4.2 TIA data reduction procedure . . . 115
10.5.4.3 Total jitter calculation . . . 116
10.5.4.4 Data dependent jitter measurement (level 2) . . . 116
10.5.5 Power density spectrum of jitter (level 2) . . . 118
10.6 Real time oscilloscope methods . . . 120
10.6.1 Overview . . . 120
10.6.2 Clock recovery and waveform eye diagram . . . 121
10.6.3 Spectrum approach to jitter measurements . . . 122
10.6.3.1 Overview . . . 122
10.6.3.2 RJ/DJ analysis (level 2) . . . 123
10.6.3.3 Analyzing DJ components (level 2) . . . 123
10.6.3.4 Obtaining the jitter eye opening . . . 124
10.6.3.5 Deterministic jitter and total jitter (level 1) . . . 124
10.6.3.6 Jitter eye diagram . . . 125
10.6.4 Jitter noise floor of RT scope oscilloscope waveform data . . . 125
11 Jitter / signal tolerance measurement methodologies . . . 125
11.1 Overview . . . 125
11.2 Jitter tolerance test methodologies . . . 127
11.2.1 Overview . . . 127
11.2.2 General methodology . . . 127
11.2.3 Sinusoidal jitter modulation . . . 128
11.2.4 Jitter / signal tolerance sources . . . 128
11.2.4.1 Overview . . . 128

Documents
Document Sharing Hub
Full document details: ISO IEC TR 14165-117-2007

11.2.4.2 Optical jitter / signal tolerance source example . . . 130
11.2.4.3 Electrical jitter / signal tolerance source example . . . 131
11.2.5 Calibration of a jitter tolerance signal source . . . 131
11.2.6 Direct time synthesis . . . 132
11.2.7 BER measurements . . . 132
12 Example use of jitter specification methodology for FC-PI-n . . . 133
12.1 Overview . . . 133
12.2 Dependence on signal properties other than jitter output at the average signal level . . . 133
12.3 Jitter output budget and jitter tolerance budget . . . 134
12.3.1 Overview . . . 134
12.3.2 Example jitter output budget tables . . . 134
12.3.3 Jitter tolerance specification . . . 134
13 Practical measurements . . . 135
13.1 Level 1 and level 2 measurements . . . 135
13.2 System considerations . . . 136
13.3 Component considerations . . . 137
13.4 Instrumentation considerations . . . 138
13.4.1 General . . . 138
13.4.2 FC compliant . . . 138
13.4.3 Non-FC compliant . . . 138
13.5 Reference standards / calibration considerations . . . 138
13.6 Test fixture compensation and calibration issues . . . 139
13.6.1 Overview . . . 139
13.6.2 Compensating and non-compensating test fixtures . . . 139
13.6.3 Detection and correction of test fixture degradation effects . . . 139
13.6.4 Correction for golden test fixture effects . . . 140
13.6.5 Connector type adapters . . . 140
13.7 Data output format considerations . . . 141
14 Detailed implementation examples . . . 142
14.1 TIA for optical gamma T at switching threshold for FC Ports . . . 142
14.1.1 Overview of measurement and strategy . . . 142
14.1.2 Test fixtures and measurement equipment . . . 143
14.1.3 Option 1 - optical TIA no clock, no marker . . . 144
14.1.3.1 Option 1 overview . . . 144
14.1.3.2 Option 1 test fixture . . . 144
14.1.3.3 Option 1 measurement equipment . . . 144
14.1.3.4 Option 1 calibration . . . 146
14.1.3.5 Option 1 measurement procedure . . . 146
14.1.3.6 Option 1 data output format . . . 147
14.1.3.7 Option 1 acceptable values . . . 148
14.1.4 Option 2 - TIA with Golden PLL bit clock . . . 149
14.1.4.1 Option 2 overview . . . 149
14.1.4.2 Option 2 test fixture . . . 149
14.1.4.3 Option 2 measurement equipment . . . 149
14.1.4.4 Option 2 calibration procedure . . . 149
14.1.4.5 Option 2 measurement procedure . . . 149
14.1.5 Option 2 data output format . . . 150
14.1.5.1 Option 2 acceptable values . . . 153
14.1.6 Option 3 - TIA with arming on bit sequence . . . 153
14.1.6.1 Option 3 overview . . . 153
14.1.6.2 Option 3 test fixture . . . 154
14.1.6.3 Option 3 measurement equipment . . . 154
14.1.6.4 Option 3 calibration procedure . . . 154
14.1.6.5 Option 3 measurement procedure . . . 154
14.1.6.6 Option 3 data output format . . . 155
14.1.6.7 Option 3 acceptable values . . . 156
14.2 Electrical Gamma T using a real time oscilloscope . . . 156

Documents
Document Sharing Hub
Full document details: ISO IEC TR 14165-117-2007

14.2.1 Overview . . . 156
14.2.2 Test Fixture and termination . . . 156
14.2.3 Measurement Equipment . . . 157
14.2.4 Measurement Procedure . . . 158
14.2.5 Measurement results . . . 159
14.3 Optical and electrical Gamma T using a jitter optimized sampling oscilloscope . . . 160
14.3.1 Overview . . . 160
14.3.2 Measurement configuration . . . 160
14.3.3 Measurement equipment . . . 162
14.3.4 Measurement procedure . . . 162
14.3.5 Measurement results . . . 163
14.3.5.1 Electrical Gamma T results at 2,125 Gbit/s. . . . 163
14.3.5.2 Optical Gamma T results at 10,518 75 Gbit/s . . . 164
14.4 BERT Delta R signal tolerance . . . 165
14.4.1 Overview . . . 165
14.4.2 Measurement configuration for signal calibration . . . 165
14.4.3 Calibration test fixtures . . . 166
14.4.4 Signal calibration procedure . . . 166
14.4.4.1 Initial DDJ calibration . . . 166
14.4.4.2 Initial RJ calibration . . . 166
14.4.4.3 SJ (sine jitter) calibration. . . . 166
14.4.4.4 Final DJ and TJ calibration . . . 167
14.4.4.5 Eye amplitude calibration . . . 168
14.4.4.6 Add SJ. . . . 168
14.4.5 Signal tolerance testing . . . 168
14.4.6 Data output format . . . 168
14.4.7 Acceptable values . . . 169
Annex A - (informative) **Test bit sequences** . . . 170
A.1 Test bit sequence characteristics . . . 170
A.1.1 Introduction . . . 170
A.1.2 Low-frequency pattern . . . 171
A.1.3 Low-transition density patterns . . . 173
A.1.3.1 Overview . . . 173
A.1.3.2 Half-rate and quarter-rate square patterns . . . 174
A.1.3.3 Ten contiguous runs of 3 . . . 175
A.1.4 Composite patterns . . . 176
A.2 Compliant jitter test bit sequences . . . 176
A.2.1 Introduction . . . 176
A.2.2 Random test bit sequence . . . 177
A.2.2.1 Overview . . . 177
A.2.2.2 Background - Fibre Channel frame . . . 177
A.2.2.3 Original RPAT . . . 178
A.2.2.4 Compliant RPAT (CRPAT) . . . 178
A.2.3 Compliant receive jitter test bit sequences . . . 181
A.2.3.1 Overview . . . 181
A.2.3.2 Receive jitter tolerance pattern - JTPAT . . . 181
A.2.3.3 Compliant receive jitter tolerance pattern - CJTPAT . . . 182
A.2.4 Supply noise test bit sequences . . . 184
A.2.4.1 Overview . . . 184
A.2.4.2 Supply noise pattern - SPAT . . . 184
A.2.4.3 Compliant supply noise pattern - CSPAT . . . 184
A.3 Practical issues with compliant patterns in operating FC systems . . . 185
Annex B - (informative) **Practical measurements** . . . 187
B.1 Introduction . . . 187
B.2 Basic architecture . . . 187
B.3 Instrumentation interface adapters . . . 188
B.3.1 Overview . . . 188

Documents
Document Sharing Hub
Full document details: ISO IEC TR 14165-117-2007

B.3.2 Balanced copper . . . 189
B.3.2.1 Introduction . . . 189
B.3.2.2 Source and sink adapters for balanced copper variants . . . 190
B.3.2.2.1 Balanced - unbalanced . . . 190
B.3.2.2.2 Balanced - balanced (alternative 1) . . . 191
B.3.2.2.3 Balanced - balanced (alternative 2) . . . 192
B.3.2.3 Tap adapters for balanced copper variants . . . 193
B.3.2.3.1 Balanced-balanced (alternative 1) . . . 193
B.3.2.3.2 Balanced - balanced (alternative 2) . . . 195
B.3.2.3.3 Balanced-unbalanced . . . 196
B.3.2.4 Extracting a balanced trigger signal . . . 197
B.3.3 Unbalanced copper . . . 198
B.3.3.1 Overview . . . 198
B.3.3.2 Source and sink adapters for unbalanced copper variants (alternative 1) . . . 198
B.3.3.3 Source and sink adapters for unbalanced copper variants (alternative 2) . . . 199
B.3.3.4 Tap adapters for unbalanced copper variants (alternative 1) . . . 199
B.3.3.5 Tap adapters for unbalanced copper variants (alternative 2) . . . 201
B.3.4 Optical . . . 201
B.3.4.1 Overview . . . 201
B.3.4.2 Source interface adapters . . . 201
B.3.4.3 Sink interface adapter . . . 202
B.3.4.4 Optical tap . . . 203
B.3.5 Specific tests . . . 203
B.3.6 Description of baluns . . . 204
B.3.6.1 Overview . . . 204
B.3.6.2 Balun requirements . . . 205
B.3.6.2.1 Overview . . . 205
B.3.6.2.2 Core and transmission-line requirements . . . 206
B.3.6.3 Specific wound core construction details . . . 206
B.3.6.3.1 Overview . . . 206
B.3.6.3.2 Alternative 1 - wound toroid construction . . . 206
B.3.6.3.3 Alternative 2 - wound toroid construction . . . 207
B.3.6.3.4 Alternative 3 - wound bead construction . . . 207
B.3.6.4 Connection of wound cores into baluns . . . 208
B.3.6.5 Other source/sink adapter components . . . 208
Annex C - (informative) **Choosing the corner frequency: fc / 1 667** . . . 209
C.1 Overview . . . 209
Annex D - (informative) **Extrapolation to low-probability CDF levels** . . . 212
D.1 Introduction . . . 212
D.2 Effects of DJ calculation and encoding scheme . . . 212
D.3 Example extrapolations . . . 213
D.4 Relationship to data pattern . . . 218
D.5 Summary . . . 218
Annex E - (informative) **Frequency domain measurement (spectrum analyzer)** . . . 219
E.1 Overview . . . 219
E.2 Frequency domain measurement algorithm . . . 220
Annex F - (informative) **Positioning of jitter eye mask relative to the data** . . . 222
F.1 Introduction . . . 222
F.2 Peak-to-peak vs mean . . . 222
F.3 Restrictions on jitter distributions . . . 223
F.4 Jitter tolerance and jitter output issues . . . 223
F.5 Special consideration for optical delta T points . . . 224
F.6 Summary . . . 224
Annex G - (informative) **Crosstalk jitter components** . . . 225
G.1 Overview . . . 225
G.2 Equipment set-up . . . 225
G.3 Measurement set-up . . . 226

Documents
Document Sharing Hub
Full document details: ISO IEC TR 14165-117-2007

G.4 Results for test 1 (zero crosstalk added) 226
G.5 Results for test 2: (50mV of crosstalk added) 228
G.6 Results for test 3: (100mV of crosstalk added) 230
G.7 Combined results 231
G.8 Conclusions 233
Annex H - (informative) **Developing a signal budget at connectors** 235
H.1 Introduction 235
H.2 Physical architecture 235
H.3 Options for connectors other than Gamma 235
H.4 Determining the budgets when using a compliance interconnect methodology 236
15 Bibliography 239

Documents
Document Sharing Hub

Full document details: ISO IEC TR 14165-117-2007

Figure 1 - Drawing conventions . . . 18
Figure 2 - PLL response . . . 27
Figure 3 - Mask of the sinusoidal component of jitter tolerance - Log-Log Plot . . . 28
Figure 4 - Waveform eye diagrams from different jitter distributions . . . 30
Figure 5 - FC-0 transmitter interface . . . 33
Figure 6 - FC-0 receiver interface . . . 33
Figure 7 - Fibre channel fabric link . . . 34
Figure 8 - Example fibre channel link storage system implementation . . . 35
Figure 9 - Interoperability points examples at connectors . . . 36
Figure 10 - Noise and jitter in the same portion of the signal . . . 38
Figure 11 - Example of multiple events within the same bit time . . . 40
Figure 12 - Signals crossing a threshold level at different times . . . 42
Figure 13 - Probability of signal event errors from adjacent signal transitions . . . 43
Figure 14 - Jitter eye diagram statistics, linear scale . . . 45
Figure 15 - Jitter eye diagram statistics, log scale . . . 45
Figure 16 - Jitter eye diagram statistics pure Gaussian different sigmas . . . 46
Figure 17 - Jitter eye diagram statistics, dual-Dirac function . . . 47
Figure 18 - Jitter eye diagram statistics, increased RJ . . . 48
Figure 19 - Various combinations of DJ and RJ . . . 48
Figure 20 - General form for the CDF bathtub curve at the specified signal level . . . 49
Figure 21 - Relationship of a jitter eye mask to a family of limiting bathtub curves . . . 50
Figure 22 - General form of a jitter eye mask used for signal quality specification . . . 51
Figure 23 - Example of an eye contour with a jitter eye mask . . . 52
Figure 24 - Practical example using a TIA at three different signal levels . . . 53
Figure 25 - Block diagram for a serial receiver with clock and data recovery . . . 54
Figure 26 - A typical PLL phase modulation frequency tracking response . . . 54
Figure 27 - Schematic of a basic measurement system . . . 55
Figure 28 - Phase modulation frequency response of the time difference function . . . 56
Figure 29 - Single pole low-pass filter passband characteristic for a Golden PLL . . . 57
Figure 30 - Example of DJ effects caused by rapid transition density changes in CJTPAT . . . 58
Figure 31 - Golden PLL delay property . . . 62
Figure 32 - Measurement set-up for evaluating transmitters . . . 65
Figure 33 - Measurement set-up for evaluating receivers . . . 67
Figure 34 - Taxonomy of jitter terminology and relationships . . . 73
Figure 35 - The two step process for calculating level 1 DJ and TJ . . . 74
Figure 36 - Three different DJ PDFs used to create CDF's in figure 37 . . . 75
Figure 37 - CDFs and associated level 1 DJ values from PDFs in figure 36 . . . 76
Figure 38 - Real data comparisons using PDFs . . . 77
Figure 39 - Real data comparisons using CDFs . . . 77
Figure 40 - Histogram of a set of jitter events . . . 83
Figure 41 - Schematic drawing of the total jitter histogram in the presence of DJ and RJ . . . 84
Figure 42 - Accuracy simulation for tail fit with a "noisy" total jitter histogram . . . 85
Figure 43 - Set-up schematic for jitter output measurement. . . . 86
Figure 44 - Waveforms of CRPAT data and the recovered bit clock . . . 86
Figure 45 - Total jitter histogram measured with a Golden PLL clock as the reference . . . 87
Figure 46 - Level 1 CDF "bathtub curve" for the PDFs in figure 45 . . . 88
Figure 47 - Time domain jitter output test (Golden PLL) . . . 96
Figure 48 - Asychronous ET sampling . . . 96
Figure 49 - Sequential ET sampling . . . 97
Figure 50 - Waveform eye mask . . . 97
Figure 51 - Repeated pattern measurements using a sampling oscilloscope . . . 98
Figure 52 - BERT Scan signal quality measurement . . . 103
Figure 53 - Example of eye contour measurement and waveform eye . . . 106
Figure 54 - An example of time interval analysis for jitter spectrum output measurement . . . 107
Figure 55 - Data jitter histogram (PDF) measured and referenced to a bit clock . . . 108

Documents
Document Sharing Hub

Full document details: ISO IEC TR 14165-117-2007

Figure 56 - BER/CDF function corresponding to jitter PDF in figure 55 109
Figure 57 - Measurement setup for “known pattern with marker” 110
Figure 58 - Correlated DJ distribution as a function of bit number 111
Figure 59 - Power spectrum density (PSD) function of PJ and RJ 111
Figure 60 - BER/CDF function measured with “known pattern with marker method” 112
Figure 61 - Setup for TIA measurement without an external timing reference signal 113
Figure 62 - Correlated DJ histogram measurement 114
Figure 63 - BER/CDF function measured without an external timing reference 114
Figure 64 - Histogram of raw TIA data 115
Figure 65 - Histogram of reduced TIA data (multiples of UI removed) 115
Figure 66 - Background on the 2 versus sqrt (2) issue 116
Figure 67 - Portion of two alternating disparity K28.5 characters and resulting waveform eye 117
Figure 68 - Distribution of jitter measured by TIA 118
Figure 69 - Real-time acquisition, analysis and display 120
Figure 70 - Real-Time (RT) sampling (single trigger event) 120
Figure 71 - Fibre Channel IDLE sequence 121
Figure 72 - Recovered clock, TIE trend and waveform eye diagram 122
Figure 73 - Frequency spectrum of time interval error (TIE) 123
Figure 74 - Jitter analysis bathtub curve 124
Figure 75 - General methodology for jitter / signal tolerance measurements 128
Figure 76 - Sinusoidal jitter modulation 128
Figure 77 - Example of an optical signal tolerance source 130
Figure 78 - Example of an electrical signal tolerance source 131
Figure 79 - Direct time synthesis jitter tolerance test setup for a 10 bit deserializer 132
Figure 80 - General allowed range calibration strategy 139
Figure 81 - Compensating degradation calibration strategy 140
Figure 82 - Use of passive adapters as part of the optical test fixture 141
Figure 83 - Physical location of Gamma points (in a GBIC example) 143
Figure 84 - Test fixture and basic test configuration 144
Figure 85 - Option 1 measurement equipment detail 145
Figure 86 - Option 1 measurement setup 147
Figure 87 - Data output format for Option 1 measurement 148
Figure 88 - Summary for Option 1 measurement 148
Figure 89 - Configuration for option 2 measurements 149
Figure 90 - Option 2 measurement setup 150
Figure 91 - Option 2 data output format rendition 1 - histogram 151
Figure 92 - Option 2 data output format rendition 2 - bathtub curve 152
Figure 93 - Option 2 data output format rendition 3 - Summary statistics 153
Figure 94 - Option 3 configuration 153
Figure 95 - Option 3 measurement configuration 154
Figure 96 - Option 3 data output format rendition 1 - Bathtub curve 155
Figure 97 - Option 3 data output format rendition 2 - Summary 156
Figure 98 - Test fixture and termination Option 1 157
Figure 99 - Test fixture and termination Option 2 157
Figure 100 - Real time waveform display 158
Figure 101 - Controls for setting the measurement and analysis parameters 159
Figure 102 - Measurement results 159
Figure 103 - Reference clock trigger configuration for optical DUT 160
Figure 104 - Golden PLL trigger configuration 161
Figure 105 - Reference clock trigger configuration for electrical DUT 161
Figure 106 - PLL trigger configuration 162
Figure 107 - CJTPAT Electrical Gamma T results 163
Figure 108 - Electrical Gamma T CRPAT results 163
Figure 109 - Electrical Gamma T CSPAT results 164
Figure 110 - Optical gamma T at 10,518 75 Gbit/s 164
Figure 111 - Measurement configuration for signal calibration 165
Figure 112 - Final BERT scan results 167

Documents
Document Sharing Hub
Full document details: ISO IEC TR 14165-117-2007

Figure 113 - Example of an automated BERT scan similar to figure 112 169
Figure A.1 - 8B/10B code trellis diagram 171
Figure A.2 - FFT of original RPAT 179
Figure A.3 - FFT of compliant RPAT 179
Figure B.1 - Ideal test configuration architecture 187
Figure B.2 - Placement of adapters in test configurations 189
Figure B.3 - Source/sink interface adapter matching network 190
Figure B.4 - Balanced-balanced source-sink adapter (alternative 1) 192
Figure B.5 - Half of balanced-balanced source-sink adapter (alternative 2) 193
Figure B.6 - Tap adapter matching network (balanced-balanced) 194
Figure B.7 - Half of balanced-balanced tap adapter (alternative 2) 195
Figure B.8 - Balanced-unbalanced tap adapter configuration 197
Figure B.9 - Extracting a balanced trigger for a single-ended instrument 198
Figure B.10 - Source/sink interface adapter matching network for unbal - unbal copper 199
Figure B.11 - Unbalanced-unbalanced copper tap adapter 200
Figure B.12 - Basic optical system 201
Figure B.13 - Source interface adapter 202
Figure B.14 - Sink interface adapter 202
Figure B.15 - Optical tap adapter 203
Figure B.16 - Source/sink adapter - schematic plus assembly view 205
Figure C.1 - Tolerance mask asymptotes for 1 062,5 MBd 210
Figure C.2 - Comparison of low-frequency clock jitter and tolerance mask 211
Figure D.1 - 32 000 bit data pattern results 213
Figure D.2 - 32 000 bit data pattern results 214
Figure DD.3 - 32 000 bit data pattern results 214
Figure D.4 - 32 000 bit data pattern results 215
Figure D.5 - 10 000 000 bit data pattern results 215
Figure D.6 - 10 000 000 bit data pattern results 216
Figure D.7 - 10 000 000 bit data pattern results 216
Figure D.8 - 10 000 000 bit data pattern results 217
Figure D.9 - 10 000 000 bit data pattern results 217
Figure D.10 - Example 1 jitter distribution versus data pattern 218
Figure D.11 - Example 2 (more loss) jitter distribution versus data pattern 218
Figure E.1 - Representative spectrum analyzer plot 219
Figure E.2 - Frequency domain test setup (spectrum analyzer) 219
Figure F.1 - Examples of jitter distributions 223
Figure G.1 - Equipment setup 225
Figure G.2 - Voltage versus time output of FC test board 227
Figure G.3 - Clock to data transfer characteristic 227
Figure G.4 - Distribution of the rising edges with no crosstalk 228
Figure G.5 - Output of FC test board with 50 mV crosstalk added 228
Figure G.6 - Jitter distributions for the rising and falling edges 229
Figure G.7 - Same as figure G.4 with 50 mV crosstalk added 229
Figure G.8 - Output of FC test board with 100 mV crosstalk added 230
Figure G.9 - Jitter distributions with 100 mV crosstalk 230
Figure G.10 - Same as figure G.4 with 100 mV crosstalk added 231
Figure G.11 - Base line plot with zero crosstalk added 231
Figure G.12 - Overlay of results with and without crosstalk added 232
Figure G.13 - Correlation between CDFs from three methods 233
Figure H.1 - One end of a duplex link with added connector 235
Figure H.2 - Signal budgeting options 236
Figure H.3 - Compliance interconnect mask to accommodate the Alpha T to Gamma T loss 237
Figure H.4 - Adjusting the Alpha R mask to accommodate the Gamma R to Alpha R loss 238

Documents
Document Sharing Hub

Full document details: ISO IEC TR 14165-117-2007

Table 1 - Input characteristics for a Golden PLL 59
Table 2 - Output characteristics for a Golden PLL 60
Table 3 - Jitter transfer characteristics for a Golden PLL 61
Table 4 - Signal quality contribution elements 69
Table 5 - Comparison of basic data forms and analysis methods 80
Table 6 - Signal quality measurement method summary comparison 91
Table 7 - Jitter tolerance components 126
Table 8 - 4,25 GBd jitter output budget example 135
Table 9 - 4,25 GBd jitter tolerance budget example 136
Table A.1 - Eye closure penalties for low-frequency pattern with n=12 172
Table A.2 - Low-frequency pattern 173
Table A.3 - Low-transition density pattern 174
Table A.4 - Half-rate and quarter-rate patterns - see text 175
Table A.5 - Ten runs of 3 assuming positive disparity 176
Table A.6 - Ten runs of 3 assuming negative disparity 176
Table A.7 - Fibre Channel frame 177
Table A.8 - Valid fibre channel frame delimiters 177
Table A.9 - CRPAT test bit sequence 180
Table A.10 - JTPAT 182
Table A.11 - CJTPAT 182
Table A.12 - Supply noise test bit sequence 184
Table A.13 - Compliant supply noise test bit sequence 185
Table B.1 - Ideal transfer function for source/sink adapter matching network of figure B.3 191
Table B.2 - Transfer function for alternative 1 balanced - balanced source/sink network of figure B.4 . 192
Table B.3 - Transfer function for balanced - balanced source/sink interface network of figure B.5 193
Table B.4 - Transfer function for balanced - balanced tap adapter of figure B.6 194
Table B.5 - Ideal transfer function for balanced - balanced tap adapter of figure B.7 196
Table B.6 - Ideal transfer function for unbalanced - unbalanced copper adapter of figure B.10 199
Table B.7 - Ideal transfer function for unbalanced - unbalanced copper tap adapter of figure B.11 . . . 200
Table B.8 - Sample test configuration specifications 204
Table E.1 - Frequency domain conversion 220
Table E.2 - Frequency domain conversion 221

Documents
Document Sharing Hub
Full document details: ISO IEC TR 14165-117-2007

INFORMATION TECHNOLOGY – FIBRE CHANNEL –

Part 117: Methodologies for jitter and signal quality (MJSQ)

FOREWORD

1) ISO (International Organization for Standardization) and IEC (International Electrotechnical Commission) form the specialized system for worldwide standardization. National bodies that are members of ISO or IEC participate in the development of International Standards. Their preparation is entrusted to technical committees; any ISO and IEC member body interested in the subject dealt with may participate in this preparatory work. International governmental and non-governmental organizations liaising with ISO and IEC also participate in this preparation.

2) In the field of information technology, ISO and IEC have established a joint technical committee, ISO/IEC JTC 1. Draft International Standards adopted by the joint technical committee are circulated to national bodies for voting. Publication as an International Standard requires approval by at least 75 % of the national bodies casting a vote.

3) The formal decisions or agreements of IEC and ISO on technical matters express, as nearly as possible, an international consensus of opinion on the relevant subjects since each technical committee has representation from all interested IEC and ISO member bodies.

4) IEC, ISO and ISO/IEC publications have the form of recommendations for international use and are accepted by IEC and ISO member bodies in that sense. While all reasonable efforts are made to ensure that the technical content of IEC, ISO and ISO/IEC publications is accurate, IEC or ISO cannot be held responsible for the way in which they are used or for any misinterpretation by any end user.

5) In order to promote international uniformity, IEC and ISO member bodies undertake to apply IEC, ISO and ISO/IEC publications transparently to the maximum extent possible in their national and regional publications. Any divergence between any ISO/IEC publication and the corresponding national or regional publication should be clearly indicated in the latter.

6) ISO and IEC provide no marking procedure to indicate their approval and cannot be rendered responsible for any equipment declared to be in conformity with an ISO/IEC publication.

7) All users should ensure that they have the latest edition of this publication.

8) No liability shall attach to IEC or ISO or its directors, employees, servants or agents including individual experts and members of their technical committees and IEC or ISO member bodies for any personal injury, property damage or other damage of any nature whatsoever, whether direct or indirect, or for costs (including legal fees) and expenses arising out of the publication of, use of, or reliance upon, this ISO/IEC publication or any other IEC, ISO or ISO/IEC publications.

9) Attention is drawn to the reference documents cited in this publication. Use of the referenced publications is indispensable for the correct application of this publication.

10) Attention is drawn to the possibility that some of the elements of this Technical Report, type 3, may be the subject of patent rights. ISO and IEC shall not be held responsible for identifying any or all such patent rights.

The main task of IEC and ISO technical committees is to prepare International Standards. In exceptional circumstances, ISO/IEC JTC 1 or a subcommittee may propose the publication of a technical report of one of the following types:

- type 1, when the required support cannot be obtained for the publication of an International Standard, despite repeated efforts;
- type 2, when the subject is still under technical development or where, for any other reason, there is the future but not immediate possibility of an agreement on an International Standard;
- type 3, when the technical committee has collected data of a different kind from that which is normally published as an International Standard, for example ‘state of the art’.

Technical reports of types 1 and 2 are subject to review within three years of publication to decide whether they can be transformed into International Standards. Technical reports of type 3 do not necessarily have to be reviewed until the data they provide are considered to be no longer valid or useful.

AVA Documents
Document Sharing Hub

ISO/IEC TR 14165-117, which is a technical report of type 3, was prepared by subcommittee 25: Interconnection of information technology equipment, of ISO/IEC joint technical committee 1: Information technology.

This Technical Report has been approved by vote of the member bodies, and the voting results may be obtained from the address given on the second title page.

This publication has been drafted in accordance with the ISO/IEC Directives, Part 2.

Documents
Document Sharing Hub

Full document details: ISO IEC TR 14165-117-2007

INFORMATION TECHNOLOGY – FIBRE CHANNEL –

Part 117: Methodologies for jitter and signal quality (MJSQ)

1 Scope

The measurement methods and specifications are intended to be used as part of a total signal performance compliance requirement set where the phase content of the signal is involved. A more generalized concept for jitter compliance testing is developed where the phase properties of the signals at signal levels other than the nominal receiver switching point are considered as well as the phase properties at the nominal receiver detection threshold. The purpose of this report is to provide background information for revising and expanding the signal specifications presently contained within the FC-PH-n, FC-PI-n, FC-100-DF-EL-S and 10GFC standards and draft standards. The MJSQ technical report is used as a basis for many of the signal specification methodologies in these documents. A further purpose is to increase the general understanding of jitter in multi-gigabaud serial transmissions for application to transports other than Fibre Channel. Documenting high speed serial signal measurement methods provides encouragement to instrument companies to create compatible measurement systems and fixturing capable of supporting 1 GBd and higher transmission rates and more generalized jitter concepts.

Although this document is optimized for use with Fibre Channel, the measurement methodologies are applicable to a broad range of serial transmission schemes.

This Technical Report applies to fully functional Fibre Channel subsystem and FC port implementations as well as to the individual components that comprise the link. This allows device and enclosure level qualification and the inclusion of system jitter contributions such as power supply noise, motor noise, crosstalk and signal rejuvenaters.

A major goal of MJSQ is to improve the relationship between measurements on signals and receiver performance in terms of bit errors.

The report adds to or extends previous work in the following areas:

a) Exposing serious implementation errors commonly found from improper use of BERT's and sampling oscilloscopes (improper use of time references and improper extraction of total jitter from sampling oscilloscopes)
b) Algorithms for separating jitter components
c) Complete specifications for executing tests including test fixtures, instrumentation specifications, calibration schemes, measurement processes and data output formats - examples for several electrical and optical applications
d) Methodology for specifying launched and received signals when pre-emphasis or receiver signal processing is used
e) Inclusion of events occurring at all signal levels within the allowed eye opening at the specified total population probability (e.g., 10^{-12})
f) Extending the receiver tolerance methodology to consider effects of different population distributions.

The MJSQ Technical Report is informative and advisory only. Certain contents of this document may be incorporated into the appropriate INCITS standards in the future.

Documents
Document Sharing Hub

Full document details: ISO IEC TR 14165-117-2007

2 Normative references

The following referenced documents are indispensable for the application of this document. For dated references, only the edition cited applies. For undated references, the latest edition of the referenced document (including any amendments) applies.

2.1 Approved references

[1] ISO/IEC 14165-115, *Information technology - Fibre channel - Part 115: Physical interfaces (FC-PI) [INCITS 352 -2002, Rev 13]*

[2] ISO/IEC 14165-116, *Information technology - Fibre channel - Part 116: 10 Gigabit fibre channel (10 GFC) [INCITS 364 -2003]*

[3] ISO/IEC 8802-3, *Information technology - Telecommunications and information exchange between systems – Local and metropolitan area networks – Specific requirements - Part 3: Carrier sense multiple access with collision detection (CSMA/CD) access method and physical layer specifications, Clause AE: Media Access Control Parameters, Physical Layer, Repeater and Management Parameters for 10 Gbit/s Operation (10 Gigabit Ethernet) [IEEE P802.3ae]*

2.2 Other references

All references in this subclause were correct at the time of approval of this Technical Report. The provisions of the referenced specifications, as identified in this subclause, are valid within the context of this Technical Report. The reference to a specification within this Technical Report does not give it any further status within ISO or IEC.

[4] ANSI INCITS 230 (R1999) - Fibre Channel - Physical and Signaling Interface (FC-PH)

[5] Synchronous Optical Network (SONET) Transport Systems: Common Criteria (GR-253-CORE, December 2005)

[6] ANSI T1.105, *Synchronous Optical Network (SONET) Basic Description Including Multiplex Structures, Rates and Formats*

[7] ANSI T1.105.06, *SONET: Physical Layer Specifications*

[8] OFSTP-4A (EIA/TIA-526-4) - Optical Eye Pattern Measurement Procedure

3 Definitions and conventions

3.1 Overview

For the purposes of this document the following acronyms, definitions, conventions and symbols apply .

3.2 Conventions

All drawings in this document conform to the conventions in figure 1.

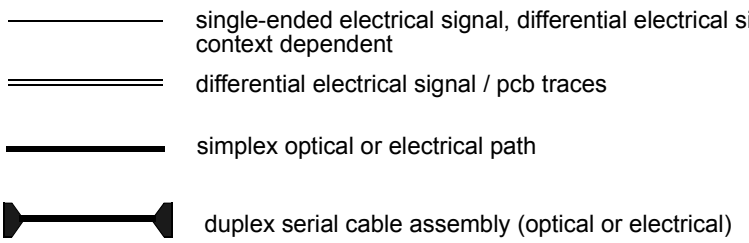

Figure 1 - Drawing conventions

Documents
Document Sharing Hub
Full document details: ISO IEC TR 14165-117-2007

In the event of conflicts between the text, tables and figures in this document, the following precedence shall be used: text, tables and figures.

Certain words and terms used in this American National Technical Report have a specific meaning beyond the normal English meaning. These words and terms are defined either in clause 3 or in the text where they first appear.

All parametric data are specified in terms of fundamental MKSA units - meters, kilograms, seconds, amperes - and their derivatives - ohms, henrys, mhos, farads, volts, coulombs, etc.

Decimals are indicated with a comma (e.g., two and one half is represented as 2,5).

Decimal numbers with more than three significant digits on either side of the decimal point are separated into groups of three digits by means of a space, for example, 2,997 924 58 x 10^8 or 1 062,5 MBd.

Units prefixed by k, M and G refer to 1E3, 1E6 and 1E9 respectively, not 2^{10}, 2^{20} and 2^{30}.

An alphanumeric list (e.g., a, b, c or A, B, C) of items indicate the items in the list are unordered.

A numeric list (e.g., 1,2,3) of items indicate the items in the list are ordered (i.e., item 1 shall occur or complete before item 2).

Bold fonts, when used in body text, indicate additional emphasis.

3.3 Keywords

Expected: anticipated to be true, assumed to exist

May: Indicates flexibility of choice with no implied preference; also means that the ability exists in the referenced topic.

Optional: Features that are not required to be implemented by this document. However, if any optional feature defined by this document is implemented, it shall be implemented as defined in this document.

Shall: Indicates a requirement for compliance to this document. Since this is a technical report there are no enforceable requirements.

Should: Indicates flexibility of choice with a preferred alternative; equivalent to the phrase “it is recommended”.

3.4 Acronyms

ARB	A specific primitive bit sequence as defined in FC-PH
BER	Bit Error Ratio
BERT	Bit Error Rate Tester
BUJ	Bounded Uncorrelated Jitter
BWJ	Baseline Wander Jitter
CDF	Cumulative Distribution Function
CDR	Clock and Data Recovery
CJTPAT	Compliant Jitter Tolerance PATtern
CRC	Cyclic Redundancy Check
CRPAT	Compliant Random PATtern
CRU	Clock Recovery Unit
CSPAT	Compliant SSO pattern
DCD	Duty Cycle Distortion
DJ	Deterministic Jitter
DDJ	Data Dependent Jitter
DIJ	Dispersion Induced Jitter

Documents
Document Sharing Hub
Full document details: ISO IEC TR 14165-117-2007

DTS	Direct Time Synthesis
DUT	Device Under Test
EOF	End Of Frame; a primitive bit sequence as defined in FC-PH
EQ	EQuivalent time (OscilloScope)
ESD	Electrostatic Discharge
FC	Fibre Channel
FCS	Fibre Channel Standard
FFT	Fast Fourier Transform
FUT	fibre Under Test
HA	Host Adapter
HDD	Hard Disk Drive
IDLE	A specific primitive bit sequence as defined in FC-PH
ISI	Inter-Symbol Interference
JBOD	Just a Bunch Of Disks
JTPAT	Jitter Tolerance test PATtern
LPDDJ	Low Probability Data Dependent Jitte
MJSQ	Methodologies for Jitter and Signal Quality Specification
MM	Multi Mode (fibre)
OFSTP	Optical Fibre System Test Practice
PBC	Port Bypass Circuit
PDF	Probability Density Function
PLL	Phase Locked Loop
PMD	Physical Media Dependent sublayer
R_RDY	Receive Ready, a specific primitive bit sequence as defined in FC-PH
RBC	Recovered Byte Clock (one tenth of signaling rate as defined in 10 bit TR
RJ	Random Jitter
RIJ	Reflection Induced Jitter
RPAT	Random Pattern
RSS	Root-Sum-of-Squares
RT	Real Time (oscilloscope) or retimer (link component)
RX	Receive
SERDES	SERializer and DESerializer function. The CDR function is included in the deserializer.
SM	Single Mode (fibre)
SPAT	Simultaneous Switching Outputs (SSO) Pattern
SOF	Start Of Frame; a primitive bit sequence defined in FC-PH
SSO	Simultaneous Switching Outputs
TBC	Transmit Byte Clock
TIA	Timing Interval Analyzer
TJ	Total Jitter
TX	Transmit
UI	Unit Interval
WMV	Waveform Mask Violation (event where the allowable limits are exceeded)

3.5 Terms and definitions

3.5.1 α_T, α_R**:** Alpha T, Alpha R; reference points used for establishing signal budgets at the chip pins of the transmitter and receiver in an FC device or retiming element

3.5.2 β_T, β_R**:** Beta T, Beta R; interoperability points used for establishing signal budget at the internal connector nearest the alpha point unless the point also satisfies the definition for delta or gamma where it is either a delta or a gamma point

3.5.3 δ_T, δ_R**:** Delta T, Delta R; interoperability points used for establishing signal budget at the internal connector of a removable PMD element

3.5.4 γ_T, γ_R**:** Gamma T, Gamma R; interoperability points used for establishing signal budgets at the external enclosure connector

Documents
Document Sharing Hub
Full document details: ISO IEC TR 14165-117-2007

3.5.5 Alpha T, Alpha R: see α_T, α_R

3.5.6 attenuation: the transmission medium power loss expressed in units of dB

3.5.7 average power: the optical power measured using an average reading power meter when transmitting valid 8B/10B transmission characters

3.5.8 bandwidth: in jitter context, the corner frequency of a low-pass transmission characteristic, such as that of an optical receiver. The modal bandwidth of an optical fibre medium is expressed in units of MHz-km

3.5.9 bathtub curve: a description of the shape of a BER or CDF curve that has steep walls to a noise floor (a flat bottom) where the probability of population is small

3.5.10 baud (Bd): a unit of signalling speed, expressed as the maximum number of times per second the signal may change the state of the transmission line or other medium (Units of baud are symbols/s)

NOTE With the Fibre Channel transmission scheme, a symbol represents a single transmission bit. [(Adapted from IEEE Std. 610.7-1995 [A16].12)].

3.5.11 Beta T, Beta R: see β_T, β_R

3.5.12 bit error ratio (BER): the probability of a correct transmitted bit being erroneously received in a communication system. For purposes of this report BER is the number of bits output from a receiver that differ from the correct transmitted bits, divided by the number of transmitted bits

3.5.13 bit clock: clock used in a jitter measurement that generates a single positive and a single negative transition per unit interval for the purpose of triggering the measuring device. Note that the bit clock frequency is twice the fundamental frequency of an alternating 1010... data stream and is equal numerically to the signalling rate expressed in baud

3.5.14 bulkhead: the boundary between the shielded system enclosure (where EMC compliance is maintained) and the external interconnect attachment

3.5.15 cable plant: all passive communications elements (e.g., optical fibre, twisted pair, coaxial cable, connectors, splices, etc.) between a transmitter and a receiver

3.5.16 clock data recovery (CDR): the function is provided by the SERDES circuitry responsible for producing a regular clock signal from the serial data and for aligning this clock to the serial data bits. The CDR uses the recovered clock to recover the data

3.5.17 character: a defined set of n contiguous bits where n is determined by the encoding scheme. For FC that uses 8b10b encoding, n = 10

3.5.18 coaxial cable: an unbalanced electrical transmission medium consisting of concentric conductors separated by a dielectric material with the dimensions and material arranged to give a specified electrical impedance

3.5.19 compliance point: an interoperability point where the interoperability specifications are met. Compliance points may include beta, gamma and delta points for transmitters and receivers

3.5.20 component: entities that make up the link. Examples are connectors, cable assemblies, transceivers, port bypass circuits and hubs

3.5.21 connector: electro-mechanical or opto-mechanical components consisting of a receptacle and a plug that provides a separable interface between two transmission media segments. Connectors may introduce physical disturbances to the transmission path due to impedance mismatch, crosstalk, etc. These disturbances may introduce jitter under certain conditions

3.5.22 coupler: a connector that mates two like media together

3.5.23 cumulative distribution function (CDF): the integral of the PDF from - infinity to a specific time or from a specific time to + infinity

3.5.24 delta function: a pulse with zero width and unity amplitude. See also Dirac delta function

Documents
Document Sharing Hub

Full document details: ISO IEC TR 14165-117-2007

3.5.25 Delta T, Delta R: see δ_T, δ_R

3.5.26 deterministic jitter, (level 1 DJ): the value returned by the calculation for DJ defined in clause 8. Any valid CDF may be used as input to this calculation. DJ used for compliance and budgeting is level 1 DJ. See also jitter, deterministic

3.5.27 Dirac delta function: a pulse with zero width and unity area. See also delta function

3.5.28 dispersion: (1) A term used to denote pulse broadening and distortion from all causes. The two causes of dispersion in optical transmissions are modal dispersion, due to the difference in the propagation velocity of the propagation modes in a multimode fibre and chromatic dispersion, due to the difference in propagation of the various spectral components of the optical source. Similar effects exist in electrical transmission lines. (2) Frequency dispersion caused by a dependence of propagation velocity on frequency, that leads to a pulse widening in a system with infinitely wide bandwidth. The term 'dispersion' when used without qualifiers refers to definition (1)

3.5.29 dual-Dirac: a pair of Dirac delta functions

3.5.30 duty cycle distortion (DCD): (1) The absolute value of one half the difference in the average pulse width of a '1' pulse or a '0' pulse and the ideal bit time in a clock-like (repeating 0,1,0,1,...) bit sequence. (2) One-half of the difference of the average width of a one and the average width of a zero in a waveform eye pattern measurement. Definition (2) contains the sign of the difference and is useful in the presence of actual data. DCD from definition (2) may be used with arbitrary data and is approximately the same quantitatively as that observed with clock like patterns in definition (1). DCD is not a level 1 quantity. DCD is considered to be correlated to the data pattern because it is synchronous with the bit edges. Mechanisms that produce DCD are not expected to change significantly with different data patterns. The observation of DCD may change with changes in the data pattern. DCD is part of the DJ distribution and is measured at the average value of the waveform

3.5.31 effective DJ: DJ used for level 1 compliance testing and determined by curve fitting a measured CDF to a cumulative or integrated dual-Dirac function, where each Dirac impulse, located at +DJ/2 and -DJ/2, is convolved with separate half-magnitude Gaussian functions with standard deviations sigma1 and sigma2. Equivalent to level 1 DJ. See clause 8

3.5.32 electrical fall time: the time interval for the falling edge of an electrical pulse to transit between specified percentages of the signal amplitude. In the context of MJSQ the measurement points are the 80 % and 20 % voltage levels

3.5.33 electrical rise time: the time interval for the rising edge of an electrical pulse to transit between specified percentages of the signal amplitude. In the context of MJSQ, the measurement points are the 20 % and 80 % voltage levels

3.5.34 enclosure: the outermost electromagnetic boundary (that acts as an EMI barrier) containing one or more FC devices

3.5.35 event: the measured deviation of a single signal edge time at a defined signal level of the signal from a reference time. The reference time is the jitter-timing-reference specified in 6.2.3. Events are also referred to as jitter events or signal events without changing the meaning. Examples include a sample in a sampling oscilloscope, a single TIA measurement, an error or non error reported by a BERT at a reference time and signal level

3.5.36 external connector: a bulkhead connector, whose purpose is to carry FC signals into and out of an enclosure, that exits the enclosure with only minor compromise to the shield effectiveness of the enclosure

3.5.37 eye contour: the locus of points in signal level - time space where the CDF = 1E-12 in the actual signal population determines whether a jitter eye mask violation has occurred. Either time jitter or signal level jitter may be used to measure the eye contour

3.5.38 FC device: an entity that contains the FC protocol functions and that has one or more of the connectors defined in this document. Examples are: host bus adapters, disk drives and switches. Devices may have internal connectors or bulkhead connectors

Documents
Document Sharing Hub

Full document details: ISO IEC TR 14165-117-2007

3.5.39 FC device connector: a connector defined in this document that carries the FC serial data signals into and out of the FC device

3.5.40 Gamma T, Gamma R: see γ_T, γ_R

3.5.41 Golden PLL: a function that conforms to the requirements in subclause 6.10.2 that extracts the jitter timing reference from the data stream under test to be used as the timing reference for the instrument used for measuring the jitter in the signal under test

3.5.42 internal connector: a connector, whose purpose is to carry the FC signals within an enclosure (may be shielded or unshielded)

3.5.43 internal FC Device: an FC device whose FC device connector is contained within an enclosure

3.5.44 Intersymbol Interference (ISI): reduction in the distinction of a pulse caused by overlapping energy from neighboring pulses. (Neighboring means close enough to have significant energy overlapping and does not imply or exclude adjacent pulses - many bit times may separate the pulses especially in the case of reflections). ISI may result in DDJ and vertical eye closure. Important mechanisms that produce ISI are dispersion, reflections and circuits that lead to baseline wander

3.5.45 jitter: the collection of instantaneous deviations of a signal edge times at a defined signal level of the signal from the reference times for those events. The reference time is the jitter-timing-reference specified in 6.2.3 that occurs under a specific set of conditions

3.5.46 jitter, baseline wander induced (BWJ): a form of DDJ that is caused by the effects of the transfer function of a of a high-pass filter circuit in the signal transmission process. Coupling circuits may cause ISI effects that produce correlated deterministic jitter

3.5.47 jitter, bounded and uncorrelated (BUJ): the part of the deterministic jitter that is not aligned in time to the HPDDJ and DCD in the data stream being measured. Sources of BUJ include, (1) power supply noise that affects the launched signal, (2) crosstalk that occurs during transmission and (3) clipped Gaussian distributions caused by properties of active circuits. BUJ usually is high population DJ, with the possible exception of power supply noise

3.5.48 jitter, data dependent (DDJ): jitter that is added when the transmission pattern is changed from a clock like to a non-clock like pattern. For example, data dependent deterministic jitter may be caused by the time differences required for the signal to arrive at the receiver threshold when starting from different places in bit sequences (symbols). DDJ is expected whenever any bit sequence has frequency components that are propagated at different rates. For example when using media that attenuates the peak amplitude of the bit sequence consisting of alternating 0,1,0,1... more than peak amplitude of the bit sequence consisting of 0,0,0,0,1,1,1,1... the time required to reach the receiver threshold with the 0,1,0,1... is less than required from the 0,0,0,0,1,1,1,1.... The run length of 4 produces a higher amplitude that takes more time to overcome when changing bit values and therefore produces a time difference compared to the run length of 1 bit sequence. When different run lengths are mixed in the same transmission the different bit sequences (symbols) therefore interfere with each other. Data dependent jitter may also be caused by reflections, ground bounce, transfer functions of coupling circuits and other mechanisms

3.5.49 jitter, deterministic (DJ): jitter with non-Gaussian probability density function. Deterministic jitter is always bounded in amplitude and has specific causes. Deterministic jitter comprises (1) correlated DJ (data dependent (DDJ) and duty cycle distortion (DCD)) and (2) DJ that is uncorrelated to the data and bounded in amplitude (BUJ). DJ is characterized by its bounded, peak-to-peak value. Level 1 DJ, see 3.5.26 and 3.5.66, is defined by an assumed CDF form and may be used for compliance testing

3.5.50 jitter, dispersion induced (DIJ): a form of DDJ that is caused by dispersion in the signal transmission process. Dispersion may cause ISI effects that produce correlated deterministic jitter

3.5.51 jitter, periodic (PJ): spectral peaks in the BUJ frequency spectrum

Documents
Document Sharing Hub

Full document details: ISO IEC TR 14165-117-2007

3.5.52 jitter, reflection induced (RIJ): a form of DDJ caused by reflections in the signal transmission process. Reflections may cause ISI effects that produce correlated deterministic jitter

3.5.53 jitter, sinusiodal (SJ): single tone jitter applied during signal tolerance testing

3.5.54 jitter distribution: a general term describing either PDF or CDF properties

3.5.55 jitter eye opening (horizontal): the time interval, measured at the signal level for the measurement (commonly at the time-averaged signal level), between the 10^{-12} CDF level for the leading and trailing transitions associated with a unit interval (see figure 20 and figure 21)

3.5.56 jitter frequency: the frequency associated with the jitter waveform produced by plotting the jitter for each signal edge against bit time in a continuously running bit stream. See 6.11

3.5.57 jitter output: the quantity of jitter at a specific physical position in the link

3.5.58 jitter, random, RJ: jitter that is characterized by a Gaussian distribution and is unbounded

3.5.59 jitter, residual: jitter that remains after the DDJ and the DCD is removed

3.5.60 jitter, total, TJ: total jitter in UI is calculated from (1 - jitter eye opening) where jitter eye opening is measured in UI

3.5.61 jitter timing reference: the signal used as the basis for calculating the jitter in the signal under test. The jitter timing reference has specific requirements on its ability to track and respond to changes in the signal under test (see 6.2.3). The jitter timing reference may be different from other timing references available in the system

3.5.62 jitter transfer: the ratio as a function of jitter frequency between the jitter output and jitter input for a link element (component, device, or system) often expressed in dB. A negative dB jitter transfer indicates the element removed jitter. A positive dB jitter transfer indicates the element added jitter. A 0 dB jitter transfer indicates the element had no effect on jitter

3.5.63 jitter tolerance for links: the ability of the link downstream from the receive interoperability point (γ_r, β_r, or δ_r) to recover transmitted bits in an incoming data stream in the presence of specified jitter in the signal. Jitter tolerance is measured by the amount of jitter required to produce a specified bit error ratio. The required jitter tolerance performance depends on the frequency content of the jitter. Since detection of bit errors is required to determine the jitter tolerance, receivers embedded in an FC Ports require that the Port be capable of reporting bit errors. For receivers that are not embedded in FC Ports the bit error detection and reporting may be accomplished by instrumentation attached to the output of the receiver. Jitter tolerance is always measured using the minimum allowed signal amplitude unless otherwise specified. See also 3.5.89

3.5.64 jitter tolerance for receivers: the ability of a receiver to recover transmitted bits in an incoming data stream in the presence of specified jitter in the signal. Jitter tolerance is measured by the amount of jitter required to produce a specified bit error ratio. The reference point for the jitter tolerance of the receiver is the α_R point. The required jitter tolerance performance depends on the frequency content of the jitter. Since detection of bit errors is required to determine the jitter tolerance, receivers embedded in an FC Port require that the Port be capable of reporting bit errors. For receivers that are not embedded in an FC Port the bit error detection and reporting may be accomplished by instrumentation attached to the output of the receiver. Jitter tolerance is always measured using the minimum allowed signal amplitude unless otherwise specified. See also 3.5.89

3.5.65 level:
1. A document artifice, for example, FC-0, used to group related architectural functions. No specific correspondence is intended between levels and actual implementations.
2. In FC-PI-n context, a specific value of voltage or optical power (e.g., voltage level).
3. The type of measurement: level 1 is a measurement intended for compliance, level 2 is a measurement intended for characterization/diagnosis

Documents
Document Sharing Hub
Full document details: ISO IEC TR 14165-117-2007

3.5.66 level 1 DJ: term used in this document for the effective DJ value that is used for DJ compliance purposes

3.5.67 limiting amplifier: an active non-linear circuit with amplitude gain that keeps the output levels within specified levels, but are generally not designed to reduce jitter and may increase jitter

3.5.68 media: (1) General term referring to all the elements comprising the interconnect. This includes fibre optic cables, optical converters, electrical cables, pc boards, connectors, hubs and port bypass circuits. (2) May be used in a narrow sense to refer to the bulk cable material in cable assemblies that are not part of the connectors. Due to the multiplicity of meanings for this term its use is not encouraged

3.5.69 optical fall time: the time interval required for the falling edge of an optical pulse to transit between specified percentages of the signal amplitude. For lasers the transitions are measured between the 80 % and 20 % points

3.5.70 optical fibre: any filament or fibre, made of dielectric material, that guides light

3.5.71 optical modulation amplitude: the positive difference in power between the settled and averaged value of a long string of contiguous logic one bits and the settled and averaged value of a long string of contiguous logic zero bits. A long string for 8B10B encoding should be considered to be 5 bits high or 5 bits low

3.5.72 optical rise time: the time interval required for the rising edge of an optical pulse to transit between specified percentages of the signal amplitude. For lasers the transitions are measured between the 20 % and 80 % points

3.5.73 physical media dependent (PMD): a transmit and receive network used to launch into a specific type of electrical or optical interconnect or to receive from a specific type of electrical or optical interconnect. The details of the network design depend on the type of interconnect

3.5.74 Port (or FC Port): a generic reference to a Fibre Channel Port. In this document, the components that together form or contain the following: the FC protocol function with elasticity buffers to re-time data to a local clock, the SERDES function, the transmit and receive network and the ability to detect and report errors using the FC protocol

3.5.75 Port bypass circuit (PBC): an active multiplexer that is used to bypass FC ports or other ports that are unused or nonfunctional. PBC's that do not re-time the signals to a local clock are considered part of the interconnect

3.5.76 probability density function (PDF): a histogram of the jitter event population

3.5.77 random: random in this document always refers to Gaussian distribution. These distributions may apply to time jitter or signal level noise

3.5.78 receiver (Rx): an electronic component (Rx) that converts an analog serial input signal (optical or electrical) to an electrical (retimed or non-retimed) logic output signal

3.5.79 receive network: a receive network consists of all the elements between the interconnect connector inclusive of the connector and the deserializer or repeater chip input. This network may be as simple as a termination resistor and coupling capacitor or this network may be complex including components like photodiodes and transimpedance amplifiers

3.5.80 reclocker: a type of repeater specifically designed to modify data edge timing such that the data edges have a defined timing relation with respect to a bit clock recovered from the (FC) data at its input

3.5.81 repeater: an active circuit designed to modify the (FC) signals that pass through it by changing any or all of the following parameters of that signal: amplitude, slew rate and edge to edge timing. Repeaters have jitter transfer characteristics. Types of repeaters include retimers, reclockers and amplifiers

3.5.82 retimer (RT): a type of repeater specifically designed to modify data edge timing such that the output data edges have a defined timing relation with respect to a bit clock derived from a timing reference other than the (FC) data at its input. A retimer shall be capable of inserting and removing

Documents
Document Sharing Hub

Full document details: ISO IEC TR 14165-117-2007

words from the (FC) data passing through it. In the context of jitter methodology, a retimer resets the accumulation of jitter such that the output of a retimer has the jitter budget of alpha T

3.5.83 return loss: the ratio (expressed in dB) of incident power to reflected power, when a component or assembly is introduced into a link or system. May refer to optical power or to electrical power in a specified frequency range

3.5.84 run length: number of consecutive identical bits in the transmitted signal e.g., the pattern 0011111010 has a run lengths of five (5), one (1) and indeterminate run lengths at either end

3.5.85 running disparity: A binary parameter indicating the cumulative disparity (positive or negative) of all transmission characters since the most recent of (a) power on, (b) exiting diagnostic mode, or (c) start of frame

3.5.86 signal: the entire voltage or optical power waveforms within a data pattern during transmission

3.5.87 signal level: the instantaneous intensity of the signal measured in the units appropriate for the type of transmission used at the point of the measurement. The most common signal level unit for electrical transmissions is voltage while for optical signals the signal level or intensity is usually given in units of power: dBm and microwatts

3.5.88 signal amplitude: a property of the overall signal that describes the peak or peak-to-peak values of the signal level . When signal transitions interfere with or overlap each other in a signal the effective signal amplitude may be expressed as a vertical waveform eye opening (e. g. optical modulation amplitude)

3.5.89 signal tolerance: the ability of the link downstream from the receive interoperability point (γ_r, β_r, or δ_r) to recover transmitted bits in an incoming data stream in the presence of a specified signal. Signal tolerance is measured by the amount of jitter required to produce a specified bit error ratio at a specified signal amplitude. The required signal tolerance performance depends on the frequency content of the jitter and on the amplitude of the signal. Since detection of bit errors is required to determine the signal tolerance, receivers embedded in an FC Port require that the Port be capable of reporting bit errors. For receivers that are not embedded in an FC Port the bit error detection and reporting may be accomplished by instrumentation attached to the output of the receiver. Signal tolerance is always measured using the minimum allowed signal amplitude and maximum allowed jitter unless otherwise specified. See also jitter tolerance

3.5.90 spectral noise floor: the Fourier transform of the jitter remaining after BUJ is removed from residual jitter

3.5.91 transceiver: a transmitter and receiver combined in one package

3.5.92 transmission bit: a symbol of duration one unit interval that represents one of two logical values, 0 or 1. For example, for 8b10b encoding, one tenth of a transmission character

3.5.93 transmission character: any encoded character (valid or invalid) transmitted across a physical interface. Valid transmission characters are specified by the transmission code and include data and special characters

3.5.94 transmission code: a means of encoding data to enhance its transmission characteristics. The transmission code specified by FC-FS is byte-oriented, with both valid data bytes and special (control) codes encoded into 10-bit transmission characters

3.5.95 transmit network: a transmit network consists of all the elements between a serializer or repeater output and the connector inclusive of the connector. This network may be as simple as a pull-down resistor and ac capacitor or this network may include laser drivers and lasers

3.5.96 transmitter (Tx): a circuit (Tx) that converts a logic signal to a signal suitable for the communications media (optical or electrical)

3.5.97 TxRx connection: the complete signal path between a transmitter in one FC device and a receiver in another FC device

Documents
Document Sharing Hub

Full document details: ISO IEC TR 14165-117-2007

3.5.98 unit interval (UI): the normalized (dimensionless) nominal duration of a single transmission bit. Unit interval is a measure of time that has been normalized such that 1/Bd s is 1 UI

3.5.99 waveform mask violation, WMV: a recorded signal event where an incursion occurs into the jitter eye opening in the signal level/time space defined for a particular CDF level for the signal population. For some compliant receivers this event could produce a link bit error. Note that a maximum of one WMV event may be recorded within a single bit period. Multiple incursions into the eye opening from the same signal within the same bit time shall be counted only once. WMV's are not failures unless the number exceeds that allowed

3.5.100 word: in Fibre Channel protocol, a string of four contiguous bytes occurring on boundaries that are zero modulo 4 from a specified reference

4 Background for MJSQ

4.1 Overview

Clause 4 describes the historical background of MJS and MJSQ and some of the reasons that the original MJS technical report was produced. The concepts and terminology in this clause are more fully developed throughout MJSQ and may not be fully understood without exploring the remainder of MJSQ.

4.2 Relationship to SONET and receiver tolerance requirements

The methodologies in this document are extensions of the SONET 5, 6, 7 jitter specification concepts. In SONET the term 'network interface jitter' is used in approximately the same way as the term 'jitter' is used in this document. SONET also defines a term 'frame jitter' that is not equivalent to the term 'jitter' used in this document.

The extensions to SONET implicitly specify the assumed receiver CDR characteristic. The specification for the frequency response of the clock recovery circuit is determined by defining a jitter tolerance mask for the clock and data recovery function. Jitter occurring below the characteristic frequency is tracked and modifies the recovered clock frequency whereas jitter above the characteristic frequency is not tracked. This PLL characteristic exists for digital as well as analog (PLL-based) CDR's. Figure 2 schematically shows this tracking or frequency response characteristic. Additionally, at certain frequencies jitter peaking may occur whereby the output jitter is greater than the input jitter. It should be noted that the jitter peaking and CDR bandwidth property of some CDR's is a potential source of jitter degradation when used in repeaters within the interconnect. This document does not specify a separate requirement for jitter peaking and CDR bandwidth.

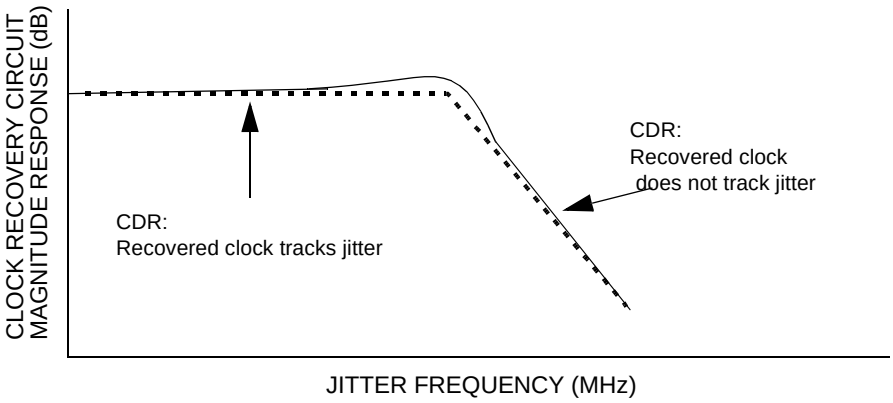

Figure 2 - PLL response

A spectral characteristic is imposed on the specification to differentiate between jitter that may be benign to a link's bit error ratio performance because of the receiver's ability to track low frequencies and jitter that is

Documents
Document Sharing Hub
Full document details: ISO IEC TR 14165-117-2007

detrimental to a link's bit error ratio performance. The jitter tolerance specification in figure 3 creates a jitter tolerance spectral requirement that is not currently specified in the FC-PH document. The implication of this specification is that jitter output specifications at all compliance points include frequency content based on the jitter tolerance mask.

When comparing this jitter specification to SONET jitter specification, the jitter tolerance masks are based on different test conditions.

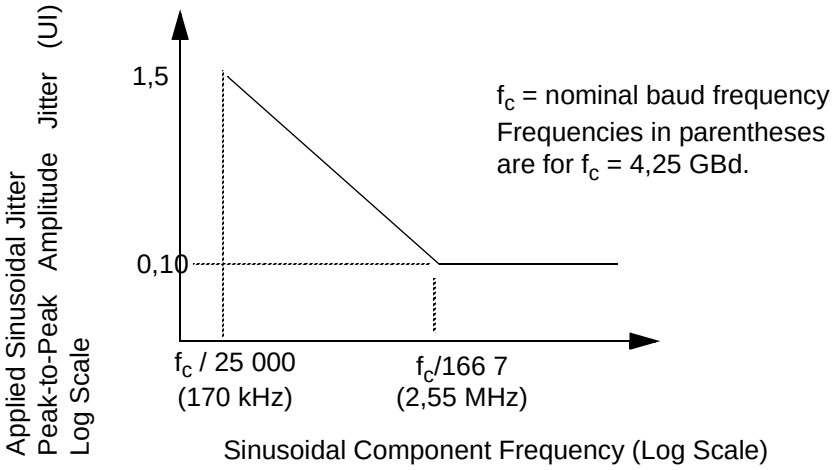

Figure 3 - Mask of the sinusoidal component of jitter tolerance - Log-Log Plot

For most receivers high-frequency jitter has greater impact on bit error ratio than low-frequency jitter because the receiver is capable of tracking the low-frequency jitter. Jitter specifications that include frequency content require additional testing; but lower systems costs may be achieved with the relaxation of the clock stability requirements.

A real example of being able to build lower cost systems by imposing the spectral characteristics to jitter relates to using lower cost reference clocks for the serializer clock multiplier PLL. Clock synthesizers are lower cost than crystal oscillators. Analysis of low-cost clock synthesizers shows an unacceptably large jitter content. Further analysis shows that most of the clock jitter is low frequency that passes unattenuated out of the optical or electrical transmitter. However, the receiver CDR reliably tracks this low-frequency jitter and recovers the data.

4.3 Relationship to earlier FC standards

The ANSI Fibre Channel specification X3.230-1994 (FC-PH) 4 only specifies measurement techniques for jitter. Two jitter generation measurement techniques are specified in X3.230-1994. One measurement is for deterministic jitter using a special Fibre Channel K28.5 pattern that contains the longest and shortest runs. The other measurement is for random jitter using a special Fibre Channel defined character, K28.7, that is a "clock-like" data sequence assumed not to contain deterministic jitter. The deterministic jitter measurement results in a peak-to-peak value and the random jitter measurement results in an RMS value. As stated in Annex J of FC-PH, the peak-to-peak value of random jitter is 14 times the RMS value for a 10^{-12} bit error ratio. Total jitter is equal to peak-to-peak random jitter plus peak-to-peak deterministic jitter.

The methodology relying on repeated K28.7 characters for measuring RJ and repeated K28.5 for measuring DJ are flawed for the following reasons:

Documents
Document Sharing Hub
Full document details: ISO IEC TR 14165-117-2007

First, the assumption that all deterministic jitter is absent in the square-wave-like K28.7 is often incorrect. For instance, deterministic sub-harmonic processes in the transmitter may show up in this measurement. Ten picoseconds of such DJ could be accounted as 14*10/2=70 pS of RJ.

Second, while the maximum and minimum run length pulses in K28.5 are ideal for measuring data-dependent jitter due to cable skin effect, this method may completely miss some components of DJ. For instance, the sub-harmonic process described above (or any jitter effect not synchronous with the K28.5 pattern) would be completely removed by averaging. Also, transmitter mistiming of any of the 5 edges out of 10 missing in K28.5 would go undiscovered.

In addition to differentiating between trackable and non-trackable jitter, a need exists to clarify the existing receiver jitter tolerance allocation indicated in Annex J of FC-PH. What is 70 % eye closure? What is this intended to test? Two CDR characteristics are important for reliable serial communication: CDR loop dynamics and CDR strobe error. These CDR characteristics become increasingly important as repeaters are used in Disk Arrays and Hubs.

Some of the features described in MJSQ are implemented in FC-PI but some significant extensions are not. MJSQ is being developed in parallel with FC-PI-2 where most extensions are implemented.

4.4 Traditional measurement methodology risks

The workhorse for evaluating signals has been the sampling oscilloscope for many years. For the properties required of high speed serial signals ordinary sampling oscilloscopes may not be suitable.

Using oscilloscope waveform eye mask methods with histogram measurements in present oscilloscope technology does not provide the statistical population required to accurately represent behavior at 10^{-12} population levels in a reasonable measurement time period. See figure 4 for examples of this issue. See also Annex A. See clause 9 for more information on different measurement methodologies. Measurements are made at the appropriate physical point in the link.

The actual signal quality may be very different at the low population levels from the appearance at high populations as seen in a typical waveform eye diagram from an oscilloscope. Figure 4 shows the waveform eyes as would result on a sampling oscilloscope from two different jitter distributions that have the same jitter eye opening at the 10^{-12} level. The distributions are taken at the nominal switching threshold level of the signals. Notice that EYE “A” seems to be considerably worse than EYE “B” but is actually equivalent in terms of its total jitter.

Documents
Document Sharing Hub
Full document details: ISO IEC TR 14165-117-2007

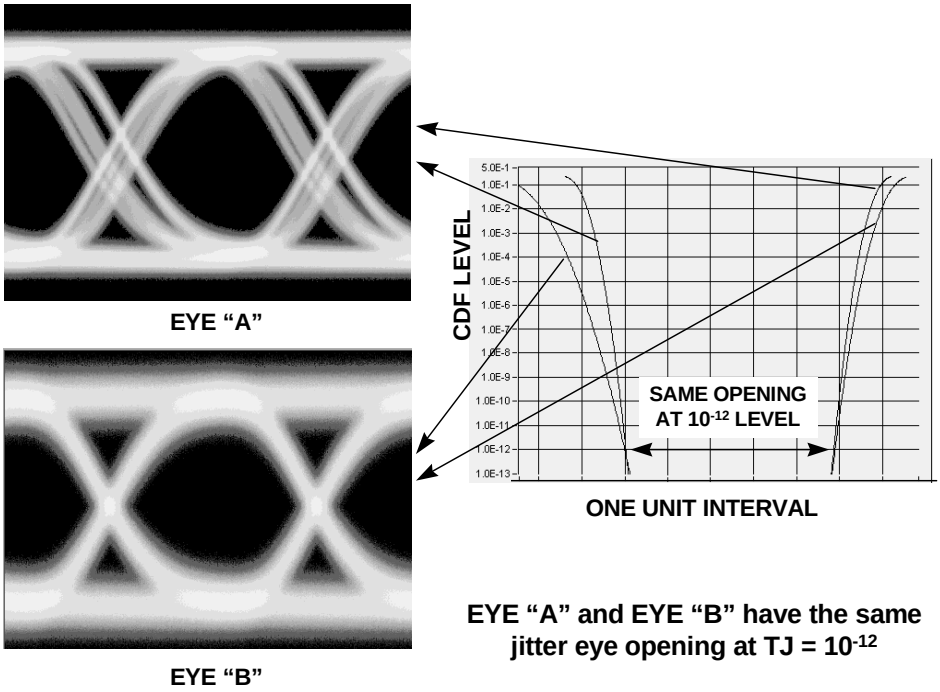

Figure 4 - Waveform eye diagrams from different jitter distributions

Traditional measurements are all recorded at the nominal receiver switching level. The most common nominal switching levels are zero differential volts for balanced electrical links and the average optical power level. Behavior at signal levels other than the nominal switching threshold is also important. For example if a signal enters the eye mask above or below the nominal switching threshold, errors may occur.

More detail concerning the important signal properties is contained in 6.2.

A signal quality measurement needs a reference time to quantify the timing properties. See 6.8.

Signal quality acceptance criteria are specified within the allowed jitter eye opening at the specified total population probability (e.g. CDF = 10^{-12}).

A major goal of MJSQ is to specify signal quality measurement methodologies that approximate more closely the observed bit error ratio of receivers.

Signal quality measurements that include results at signal levels other than the nominal switching threshold may be termed 2-dimensional or eye contour in this document.

5 Jitter overview

5.1 Serial transmissions

Serial data communication complements parallel communication schemes where the clock and data transmissions are on physically separate paths and the clock path is used as a timing reference for the others in the receiver. These separate paths behave slightly differently due to physical and bandwidth differences with resulting timing differences between the clock and data signals. Although one may employ methods to compensate the propagation time skew between the different parallel signals, ultimately the same clock signal shall be used for all data signals. This limits the bandwidth of parallel schemes that use a single clock.

Documents
Document Sharing Hub
Full document details: ISO IEC TR 14165-117-2007

In serial data communication, a separate data clock is not transmitted with the data. Rather the transmit clock is embedded along with the data so the problem of maintaining the temporal alignment between the clock signals and the data signals is eliminated. However, other problems are created in that signal transitions need to be available at intervals that are not too long so that a clock signal may be reconstructed from the single serial stream and the relationship of the reconstructed clock to the bits in the serial stream are maintained within strict limits. Even in the case of serial transmissions there is a basic requirement to maintain adequate alignment between the recovered clock (or whatever timing reference is used by the receiver to latch the bits) and the incoming data. A requirement in high speed serial communication is management of jitter involved with the data transmission and detection so that high quality data extraction from the serial signal is possible.

MJSQ assumes that a recovered clock methodology is used for the receivers.

MJSQ does not address the issues associated with encoding schemes where the phase and signal level contain information, for example phase modulation or multi-level encoding. Simple NRZ schemes are assumed.

5.2 Jitter output context

The term “jitter” refers to the deviation of the timing properties of a signal with respect to a specified reference time. Historically, the jitter is measured at the nominal switching threshold of the signal. The subclauses in this clause provide a detailed description of the context and general requirements to specify generalized jitter effectively.

When the term “jitter” is used in this document it refers to the time behavior of the signal at a specific signal level. If the signal level is not specified, either the context of the usage defines the meaning or the signal level is the nominal switching threshold for the receivers expected in the link.

Jitter is characterized by two generalized types of jitter, deterministic (DJ) and random jitter (RJ). The two categories of jitter are used in jitter analysis because each category accumulates differently in the link and because compliance and budgeting schemes require some restrictions on the jitter distributions.

Deterministic jitter is jitter that is due to non-Gaussian jitter event distributions. Deterministic jitter is always bounded in amplitude and has specific causes. Three kinds of deterministic jitter are identified: duty cycle distortion, data dependent and uncorrelated (to the data) bounded. Examples of deterministic jitter that is uncorrelated to data are power supply noise injection into the serial link and cross talk from other parts of the system. Deterministic jitter is measured as a peak-to-peak value for any distribution. Both the peak-to-peak value and the distribution contribute to the overall system performance.

Random jitter is all jitter that is Gaussian in nature. The overall observed random jitter may consist of a collection of random jitter sources. Because root-sum-of-squares (rss) addition is used in this document independence of the constituent jitter sources is required. Dependence could occur in some cases. For example, if truly random data was transmitted through an AC coupling network, the jitter pdf will be essentially Gaussian. If that data travelled through multiple stages of such networks, the jitter mechanisms would be correlated and Gaussian accumulation would be more linearly additive than rss additive. Since 8b10b encoding imposes a structure on all data we don't have truly random data for 8B10B. The surviving random jitter after encoding is therefore jitter that is uncorrelated to the data. Random jitter after 8b10b encoding is composed only of independent sources and we are therefore allowed to use rss addition for random jitter. This also validates the use of convolution where independence is required.

Because random jitter is practically measured as an RMS value (the same as the standard deviation for a Gaussian distribution), a seemingly small amount of RMS random jitter corresponds to a large peak-to-peak value. The RMS value for random jitter is multiplied by approximately 14 to result in a peak-to-peak random jitter value that corresponds to a 10^{-12} bit error ratio; refer to the jitter mathematics in 6.5. A 10 ps RMS random jitter measurement represents a 140 ps peak-to-peak value, or almost 15 % of the bit period, for Fibre Channel at 1063 MBd.

Documents
Document Sharing Hub

Full document details: ISO IEC TR 14165-117-2007

5.3 Jitter tolerance context

CDR circuits, whether analog PLL-based (Phase-Locked Loops) or digital-based, react differently depending on the rate of change or frequency of the timing misplacement. If the rate of change is gradual and "trackable" by the CDR, no bit errors occur. If jitter is instantaneous (within one bit time) and of sufficient amplitude (such as 50 % of a bit time), the CDR cannot track the timing shift and the recovered bit may be in error.

The ability to recover data successfully in the presence of jitter is called jitter tolerance. Jitter tolerance is measured as the jitter amplitude over a jitter spectrum where the link achieves a specified bit error ratio. A jitter tolerance measurement is performed as a bit error ratio measurement under the presence of a controlled amount of jitter.

Since BER performance also depends on the signal amplitude (many receivers tolerate more jitter if the signal is larger), a complete signal tolerance that includes both amplitude and jitter is required to determine compliance. If the amplitude is not separately specified in a tolerance measurement, it is assumed that the jitter tolerance is measured with the smallest allowed signal amplitude.

5.4 Jitter assumptions summary

The basic assumptions used in this document are summarized below:

The acquisition of the raw data is based on the assumptions listed immediately below:

a) Simple NRZ schemes are used.
b) JItter is composed of a collection of jitter events that occur at most once per bit period.
c) Clock recovery schemes are used in the link receivers.

In order to separate DJ from TJ and to do signal budgeting based on that separation the following assumptions apply:

a) RJ is uncorrelated to anything else.
b) DJ does not have a Gaussian probability density function when measured with the repeating data patterns prescribed in this document.
c) 8B10B encoding is used and has a DJ ceiling around BER~1E-4 for the data and around 1E-6 when BUJ (e.g.,crosstalk is included) - other encoding schemes that have similar DJ ceilings are also applicable.
d) These methods may use extrapolation, requiring the assumption that CDF/BER floors are less than 10E-12.
e) Spectral noise floors have a Gaussian PDF.
f) Jitter budgeting (separation of DJ and TJ and assigning values to each) is done by a single curve fitting method regardless of the method used to acquire the raw data.
g) Coding other than 8b10b may violate the assumptions above and not produce accurate budgeting results with the methods described.

The methods described for acquisition of TJ and the jitter population distribution (PDF or CDF) are applicable down to the noise floor regardless of the encoding scheme used.

5.5 FC-0 and MJS(-1) interface overview

The physical architecture within a transmitter interface and a receiver interface is assumed to be representable by the forms shown in figure 5 and figure 6. For simplicity, the entire interface structure is termed transmitter or receiver in this document and the transmitter and receiver shown in figure 5 and figure 6 are subsumed.

NOTE Figure 5 corresponds to Figure 9 in FC-PH.

Documents
Document Sharing Hub

Full document details: ISO IEC TR 14165-117-2007

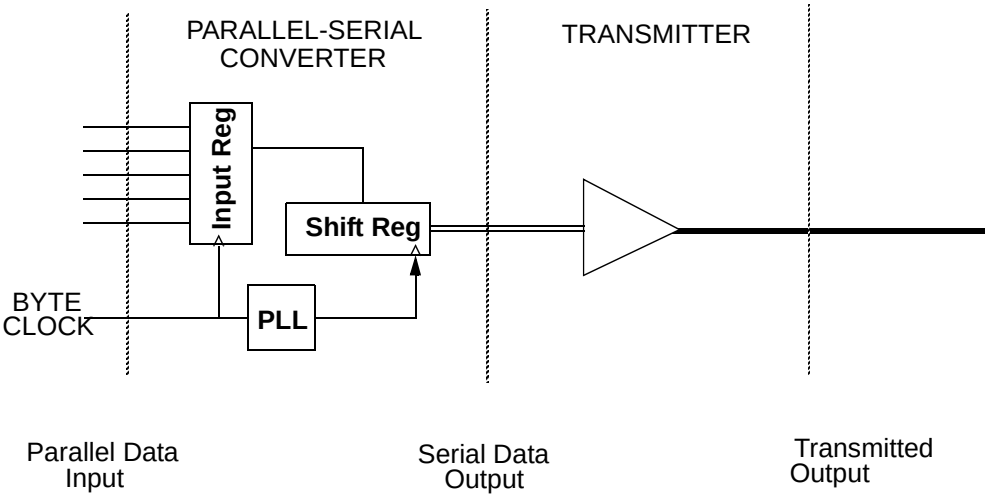

Figure 5 - FC-0 transmitter interface

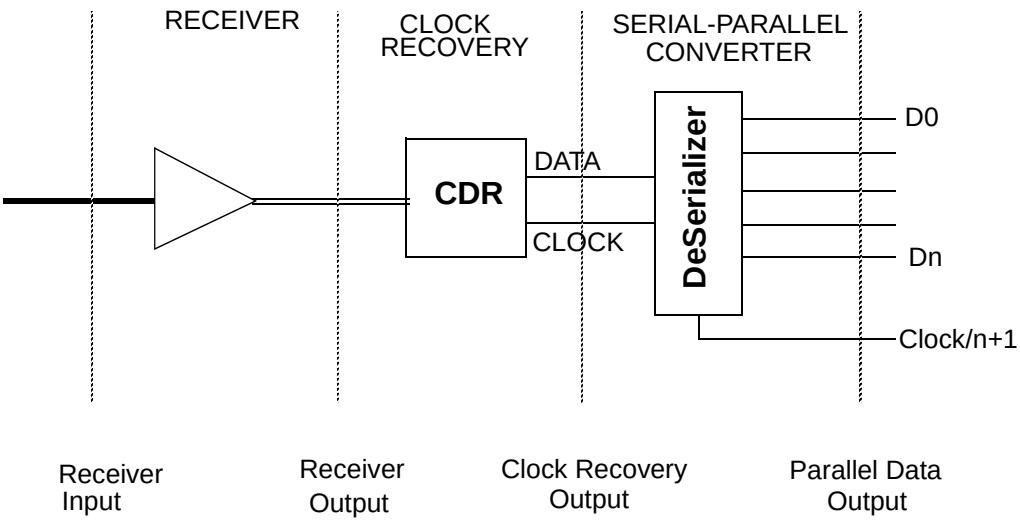

Figure 6 - FC-0 receiver interface

The reference times used to quantify the jitter and signal quality vary with specific method and physical location.

5.6 Fibre channel physical architecture

A brief description of the FC physical architecture is contained in this subclause. See FC-PI for a more complete description.

A Fibre Channel fabric link consists of the functional blocks shown in figure 7. The TxRx connection in an FCAL architecture is the same as for fabrics for MJSQ purposes. From a timing and jitter perspective, the following characteristics shall be noted. Fibre Channel uses plesiochronous timing where the port may transmit data at a slightly different frequency from its receive data frequency. Elastic storage exists within the protocol function to absorb the frequency differences as well as the maximum wander present in the link. The serializer function is responsible for suppressing jitter components present in the port from propa-

Documents
Document Sharing Hub
Full document details: ISO IEC TR 14165-117-2007

gating onto the link. The deserializer recovers a bit clock from the serial data that reliably allows the deserializer to provide parallel data and a recovered byte clock to the protocol function.

A Fibre Channel fabric link is a duplex serial data connection between two ports including the serializer, deserializer, PMD, connectors and cable assemblies. A link is necessary for communication between two ports. A link includes a minimum of a pair of transmitter-receiver connections. A TxRx connection is a simplex link consisting of one transmitter-receiver pair. A link and a TxRx connection are shown in figure 7.

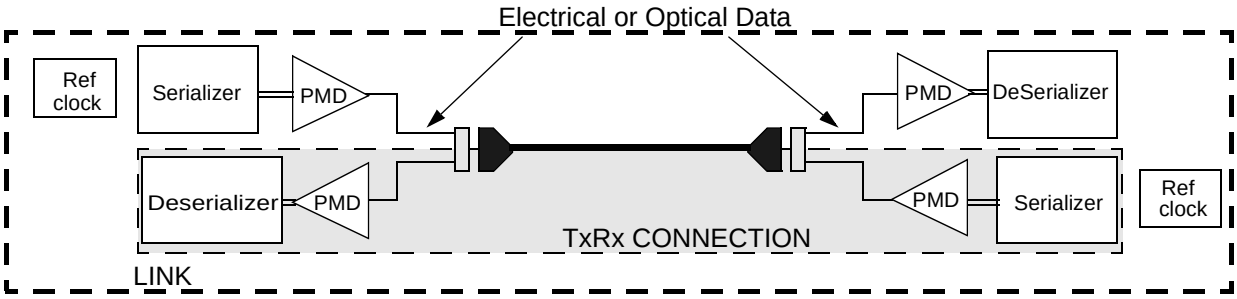

Figure 7 - Fibre channel fabric link

A port by definition contains protocol intelligence, elasticity mechanisms to absorb wander and locally timed serial data transmission. Other components in a TxRx connection may be used that attenuate jitter or re-amplify the signal to improve the signal quality. In actual system implementations, these may include active buffers, port bypass circuits, or reclockers. An example of a complex system implementation for storage application using Fibre Channel Arbitrated Loop is given in figure 8. In this system, a link between the host adapter Port and the disk drive in Port 2 is rather complex. This link would include a HA Tx to HDD Rx connection through a hub with repeaters, an enclosure with repeaters and a backpanel with one PBC and a HDD Tx to HA Rx connection through multiple HDD Ports acting as retimer circuits, several port bypass circuits, an enclosure repeater and a hub repeater.

Documents
Document Sharing Hub
Full document details: ISO IEC TR 14165-117-2007

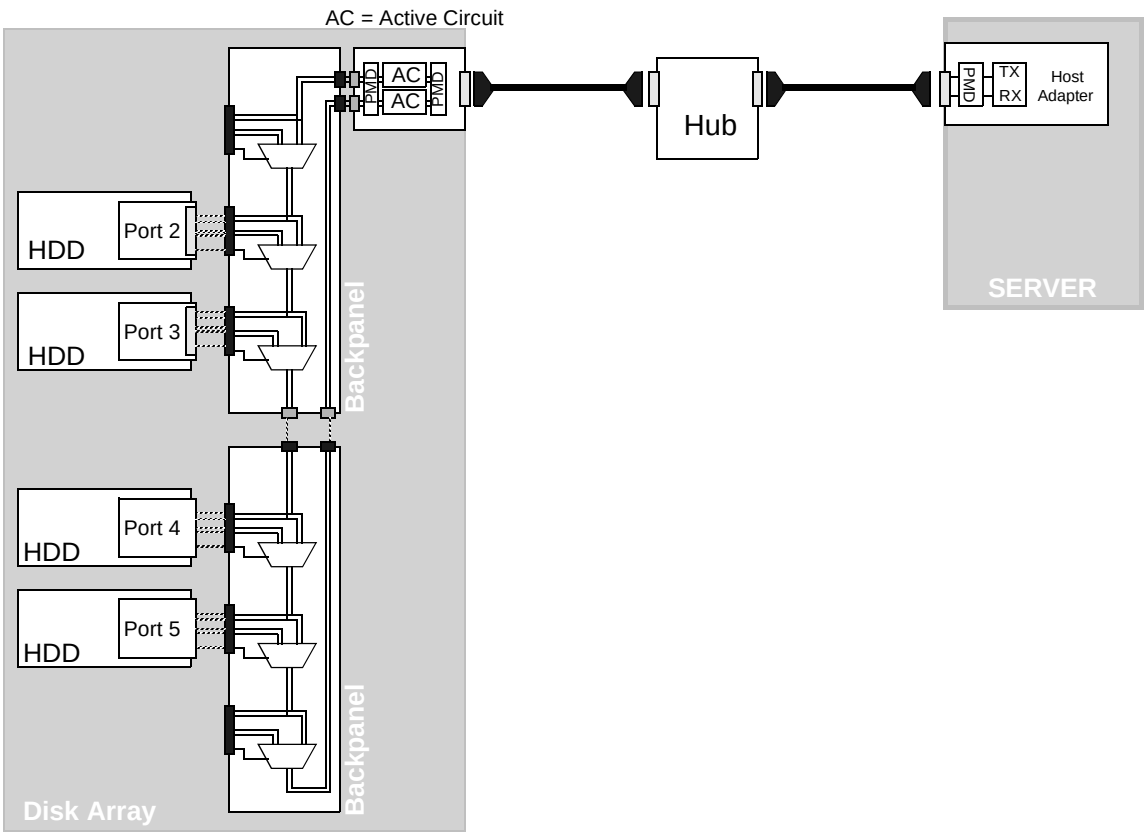

Figure 8 - Example fibre channel link storage system implementation

As shown in figure 8, a Fibre Channel Arbitrated Loop is not necessarily a point to point link with only bulkhead compliance points. It shall be clearly understood where TxRx connection interfaces exist within a system, so that jitter allocation compliance may be enforced at those points.

Figure 9 shows two examples illustrating the interoperability / compliance points with and without the use of internal connectors for media interchange and with and without the use of retimers. Interoperability points are defined at the internal device (β), the internal PMD connector (δ) and the external enclosure (or equivalently, system bulkhead) connector (γ). A reference point (α) is defined at the serialize/deserializer chip containing the re-timing function. A device such as a host adapter or disk drive intended for embedding into a larger system may have a connector that is not the actual system bulkhead connection. An enclosure is something that houses a Fibre Channel port that passes emissions and safety certification.

All measurements shall be made through mated connectors, as appropriate (β, δ, γ). For signal output measurements the mated connectors are always upstream of the signal measurement point. For signal tolerance measurements the signals to be applied to the DUT are calibrated with the connector upstream of the calibrating instrument but the actual tolerance measurement is made with the calibrated signal applied to the connector on the DUT that is downstream of the connector separation point.

A system bulkhead connector (γ) is equivalent to the current S and R points in the FC-PH specification. The terminology, TPx, used in IEEE 802.3 for γ and α for applications with no internal connectors, is also shown in the upper left portion of figure 9.

The β point is defined to be the internal connector closest to the retimer element as shown in the upper right and lower right examples. If a β point is connected to a δ point a retimer is required between the β and the δ points in order to isolate the internal TxRx connections from the external TxRx connections. The

Documents
Document Sharing Hub
Full document details: ISO IEC TR 14165-117-2007

retimer resets an internal compliance point such that all the jitter elements used internal to the storage array may use all the jitter budget allowed from β_T to β_R (not shown).

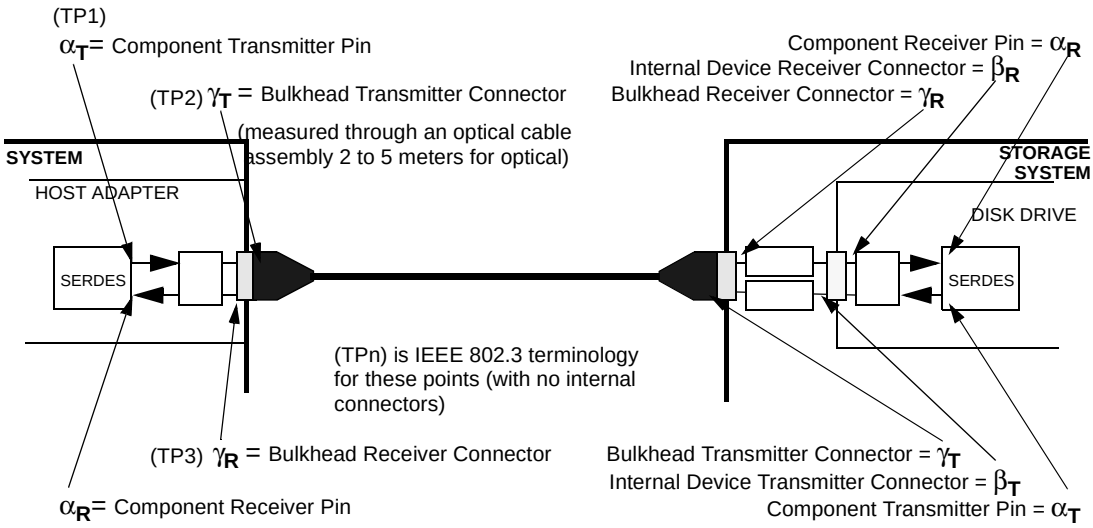

Without use of Internal δ Connectors

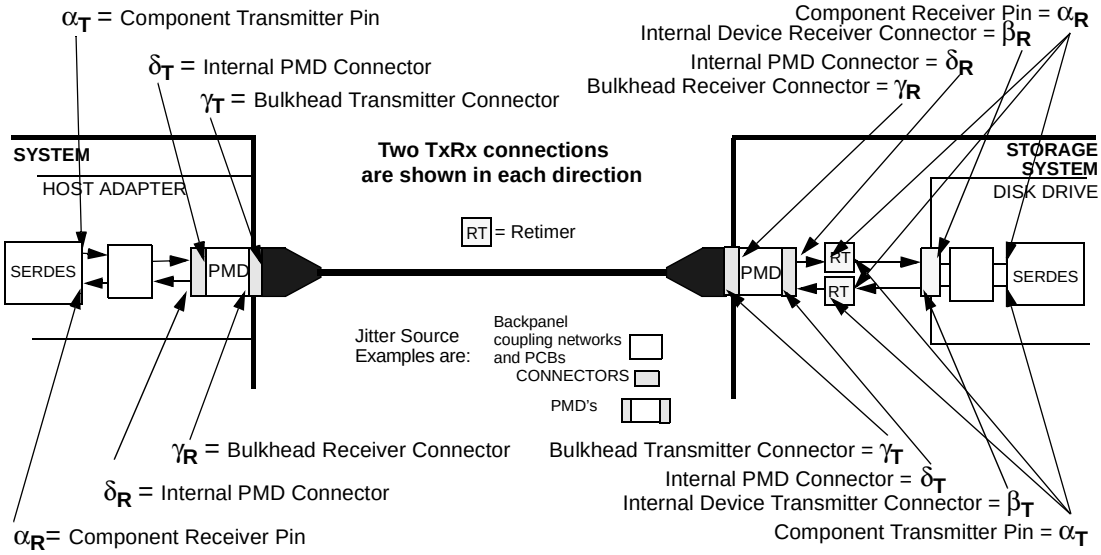

With use of internal δ connectors and retimers

(α is a reference point, not an interoperability point)

Figure 9 - Interoperability points examples at connectors

Documents
Document Sharing Hub
Full document details: ISO IEC TR 14165-117-2007

6 Jitter fundamentals

6.1 Purpose of addressing all important signal levels

In order to have the measurement of signal properties relate in a definitive way to the performance of receivers one recognizes that receivers may react to signals at other than the nominal switching threshold and may react differently to different jitter distributions or other signal properties. As a consequence, the jitter distribution at other than the nominal switching threshold level may be critical. The method for specifying acceptable performance limits at these other signal levels is an eye mask similar to that used for oscilloscopes as described in 6.6 along with bathtub curves described in 6.4.

6.2 Essential properties of signals

6.2.1 Introduction

Fundamentally, a signal is a specific relationship between signal level and time.

The level of a signal, or signal level, is its instantaneous intensity measured in the units appropriate for the type of transmission used at the point of the measurement. The most common signal level unit for electrical transmissions is voltage while for optical signals the signal level or intensity is usually given in units of power: decibel meters and microwatts (optical modulation amplitude).

Electrical signals are assumed to be baseband (i.e., not the result of modulation).

Since the information of interest in optical serial communications is transmitted as an amplitude modulation of a single carrier wavelength, the signal level of interest is the average optical power around an instant in time at the carrier wavelength. This average is taken in the optical receiver where the optical signal is converted into an electrical signal. The details of the averaging process are not important to this document since the data rates of interest are orders of magnitude which are lower than the optical carrier frequency for all practical Fibre Channel applications.

Even though the baseband electrical signal and the envelope of the modulated optical carrier may appear similar for similar data content, the physical mechanisms of transmission are very different. Nevertheless, from a signal quality point of view there is a great deal of commonality and in many cases in this document there is no distinction drawn between electrical and optical signals.

A number of properties of signals may affect the response of receivers. Since real signals may have very complex shapes and different receivers may react differently to the same signal it is important to define the most important signal properties that are known to affect receivers. Among the properties that could be important are: distribution of signal level, distribution of jitter population, whether rising edge or falling edge, slew rate, rise/fall time, spectral content, common mode content and imbalance. The methodologies described in MJSQ consider the signal level, the timing distribution (at different signal levels) and the rising or falling edge (for some methodologies) in full recognition that other properties may be important. The effort required to address the signal level, timing distribution and signal edge is significant. These properties are described in the remainder of 6.2.

6.2.2 Signal amplitude versus signal level

Signal amplitude is a property of the overall signal that describes the peak or peak-to-peak values of the the signal level. When signal transitions interfere with or overlap each other in a signal the effective signal amplitude may be expressed as a vertical waveform eye opening.

6.2.3 Time, timing reference and jitter timing reference

Time measurements require a reference time in order to be reproducible. In other words, all time measurements are the difference between a reference time and the time where the measured event is recorded. For MJSQ the time reference used for calculating jitter is called the jitter timing reference. This reference may be different from other timing references available in the system.

Documents
Document Sharing Hub
Full document details: ISO IEC TR 14165-117-2007

In order to comply with the methodologies in MJSQ the jitter timing reference shall be derived only from the data stream. See 6.10. No other jitter timing reference shall be used including: reference bit clocks supplied externally by the transmitting device (e.g. BERT's) and internal clocks used to create the transmit signal.

The present state of the art requires that the same jitter timing reference be used for all parts of the signal. It is beyond the scope of this document to create a relationship between different jitter timing references at different signal levels. This statement is similar to stating for oscilloscope based measurements that the trigger level shall remain constant for all measurements. Some choices for jitter timing reference are discussed in 6.8.

The jitter timing reference choice is perhaps the single most important part of selecting a practical measurement method for signal quality.

6.2.4 Considerations when using hardware based jitter timing references

Since jitter timing references are the references in much the same way that a ground is the reference for a single ended electrical signal any noise in the reference directly affects the accuracy of the basic measurement. In general, if the jitter timing reference has jitter, X_t, then the jitter that is measured is X_m minus X_t where X_m is the actual time of the measured signal. MJSQ does not deal with jitter in the jitter timing reference other than that required for Golden PLLs. It is up to the suppliers of the instrumentation to deliver very low noise jitter timing references.

6.2.5 Jitter and noise relationship

Consider a portion of a signal as shown in figure 10. When the nominal signal is disturbed by noise or jitter the position of the signal changes. Figure 10 shows two disturbed signals that were derived from the nominal signal. Noise properties and jitter properties may both be measured in the immediate neighborhood of a point in signal level - time space. Noise may cause jitter and jitter may cause noise. However, the cause of the disturbance to the nominal signal does not intrinsically alter the measured noise or measured jitter.

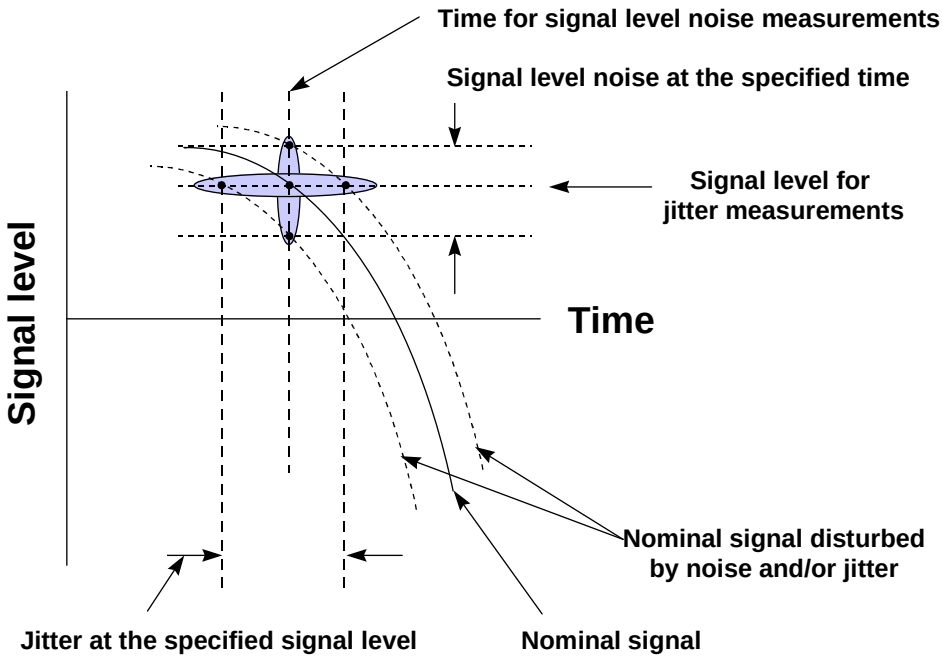

Figure 10 - Noise and jitter in the same portion of the signal

Documents
Document Sharing Hub
Full document details: ISO IEC TR 14165-117-2007

Most of the content of MJSQ assumes the constant signal level (constant measurement threshold), jitter condition. For many purposes a constant sample time (within the eye), signal level noise condition could also be a valid representation of the disturbed signal. Noise, like jitter, is also comprised of deterministic and random components that may degrade the signal quality and lead to data errors. Effective signal amplitude reduction (or vertical waveform eye closure) is a predominant limitation in many links.

For measurements near the nominal receiver switching threshold the jitter method is traditional. For measurements near the center of the bit time the signal noise method is traditional. In fact, either method allows a complete mapping of the signal level - time space.

If one knows the shape of the signal in the vicinity of the measurement then a jitter measurement may be converted to a signal level noise measurement and vice versa. In fact, the jitter optimized oscilloscope data acquisition method described later in this document is partially based on that conversion.

If a conversion is required between noise and jitter, limitations may exist to the validity range for this conversion. The nonlinearity of the signal, the bit time of the data pattern and the amplitude of the signal may all impose limits on this conversion. For example, in the case of a Gaussian noise (that is unbounded) the conversion to unbounded jitter cannot be based on the properties of a signal transition since that signal transition is bounded by the amplitude of the signal. Jitter derived via conversion from noise in this way is limited to a single rise time that is clearly bounded. There are other limitations with conversions. In general, conversion limitations may lead to a large understatement of the Gaussian jitter. This document assumes that any conversions done remain valid over the 1E-12 range within a single bit time.

Another important issue is the validity of extrapolations that are used. The conditions required for a valid extrapolation depend on the specific conversions used and on the point in signal level - time space of interest. For example, in figure 10 the changing slope of the signal causes distortions in the noise induced jitter distribution - a Gaussian noise source may not produce a Gaussian jitter distribution. In general, one should attempt to validate that the conditions of the measurement support the assumptions required for the extrapolation.

This topic is expected to be further explored in MJSQ-2.

6.2.6 Rising edges and falling edges

One consideration for acquiring signal quality data is whether the reference time and/or event being measured are associated with a rising or falling signal “edge”. Whenever the signal level changes state from high to low or low to high a signal edge or transition is produced. Usually, the signal in the transition period between the states has a monotonically changing signal level. However, conditions may exist in acceptable links where slope reversals occur during this transition.

The signal quality measurement results may depend on the choice of whether the timing reference is derived from rising edges, falling edges or a combination thereof. Complete signal quality specification methodology requires examination of all combinations of rising and falling edges for both the jitter timing reference and the signal under consideration.

It may be useful for diagnostic purposes to separate results from specific combinations of rising and falling edges.

In order to avoid effect of DCD in the jitter timing reference only the rising edge or the falling edge (but not both) may be used from the jitter timing reference signal.

6.3 Number of events per bit-period

A major goal of MJSQ is to specify methodology that enables direct comparison of signal events with bit errors experienced by a link receiver. One key requirement toward realizing this goal is that no more than one event be reported from the signal in any single bit time since receivers cannot generate more than one bit error per bit time. As a corollary, the total number of signal events reported shall not exceed the total number of bits transmitted in any given time period.

Documents
Document Sharing Hub
Full document details: ISO IEC TR 14165-117-2007

The signal is assumed to be continuous in time and if instrumentation were fast enough, theoretically multiple events per bit-period could be captured for some signals. For example, detection of multiple events per bit-period is possible for measurements of slow edges when using over-sampled real time digitizing oscilloscope technology. In data acquisition schemes that allow multiple signal events per bit period some scheme to filter the reported WMV events to no more than one per bit-period shall be used.

This single event per bit-period constraint is useful when dealing with signals that have slope reversals because it guarantees that no double counting is possible for the same bit time.

The number of times the signal crosses the signal level of interest per bit-period is affected by the pulse time compared to the bit-period, the level of the signal being examined, whether slope reversals are present, whether distinction is made between rising and falling edges and the positioning of the timing reference with respect to the signal edges. Slope reversals are common in links operating at less than 1 Gbit/s electrical applications due to reflections and crosstalk. Optical transmitters are also capable of producing slope reversals through relaxation oscillations for example.

The number of events could be seriously misreported if one had the possibility of multiple events per bit time. There are several possibilities for the number of events occurring at different signal levels as shown in the signal level versus time, an example is shown in figure 11. Since the ultimate goal of signal quality specifications is to relate the signal quality to the receiver performance and the receiver reports at most one bit error per bit received, it would be possible for the signal to be measured as producing six signal events where only one detected bit is possible in this time period.

Figure 11 only shows multiple counting due to slope reversals occuring in conjunction with a signal transition. Noise and transmitter signal distortions allow multiple counting to be theoretically possible anywhere in the bit time including during signal transitions, in the center region of the bit time and when the signal state is not changing due to the data pattern (several 1's or 0's in a row).

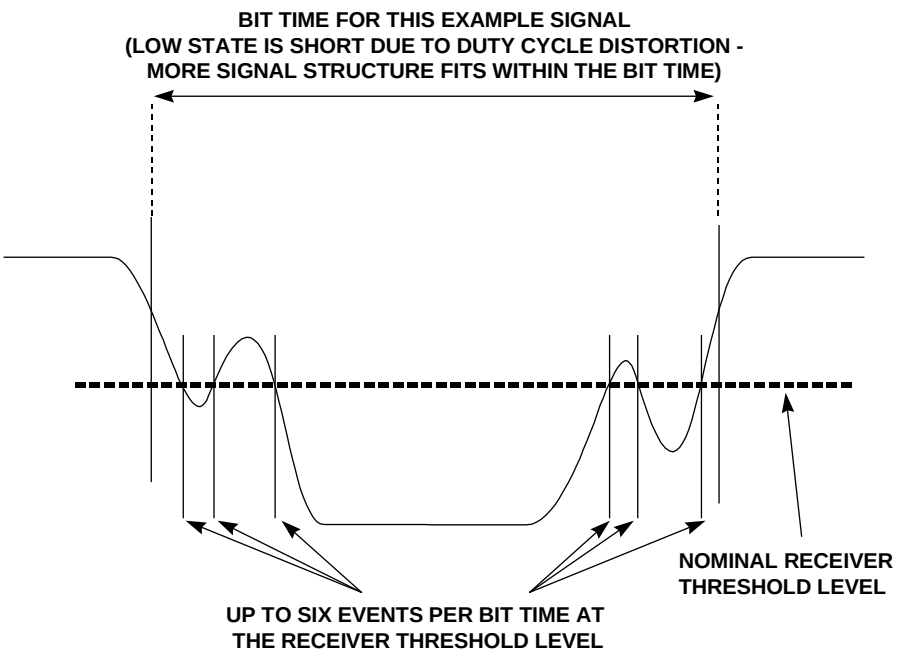

Figure 11 - Example of multiple events within the same bit time

At most a single event per rising of falling edge shall be reported.

Documents
Document Sharing Hub
Full document details: ISO IEC TR 14165-117-2007

Signal quality measurements are significantly coupled to receiver detected errors by the same counting statistics maintaining at any signal level measured.

6.4 Statistical distribution at a specific signal level

A requirement that signal quality data be acquired at specified signal levels pervades this document. The more signal levels are examined the more complete the signal quality measurement.

The population of times observed (events) when the signal crosses a specified level of interest may be compiled into a histogram. This histogram constitutes the statistical distribution.

Statistical distribution properties are critically important to the way receivers set their internal timing references (the one used to detect the bits in the receiver). More discussion of this issue is in 6.13.

6.5 Basic relationships within statistical jitter distributions

6.5.1 Overview

Subclause 6.5 describes the mathematical basis for jitter distributions and specification methodologies. Concepts and terminology that lead to the jitter eye mask and signal eye contour are developed. Insight into the relationship between jitter events, PDF's, CDF's, RJ, DJ, jitter eye opening, waveform eye opening and bit error ratio results.

The bit error ratio in the signal in this clause is based on the population of signal events that exist at time positions where there should be no signal events in the known data pattern and data rate being used. This population of erroneous signal events may be detected, for example, by a BERT strobed at a specific time and signal level within the unit interval. The signal bit error ratio is the number of erroneous signal events divided by the total number of bits transmitted over the measurement time period. A BERT with an instrumentation quality receiver is assumed.

Using a BERT methodology for signal quality measurements is different from using the same BERT to determine the bit error ratio as detected by the actual receiver in the link. This distinction is important because events reported as bit errors when performing a signal quality measurement may have only a loose relationship to link bit error ratio reported by a real link receiver. The closer the real link receiver comes to being a 'worst case' receiver the tighter the relationship between signal event errors and link errors. Signal event errors are conditions that are capable of producing link bit errors in a compliant (but perhaps just barely compliant) link receiver.

The mathematics that apply to the statistics of bit errors in signals are derivable from those that apply to schemes that sample the signal level and time properties of signals. One integrates the population of signal events from the time of the strobe point to infinity (or to - infinity) to determine the total population of erroneous signal events.

The distinction between BERT measurements on signals and direct signal level and time measurements from other instruments may be easy to miss since the distributions have similar shape over the Gaussian tail regions (the integral of an exponential function is still an exponential function). The numbers associated with the probability distributions are significantly different, however.

In figure 12, consider a portion of a typical eye diagram display that may be seen near the receiver switching threshold signal level. This discussion assumes that the source used to trigger the instrument is the same as that used to create the signal being measured and that the trigger source itself has no jitter. Typically only the rising or falling edge (not both) of the trigger source is used. In this case duty cycle distortion on the trigger source is not a concern. Jitter in the signal at the signal threshold level is indicated by the time between the trigger source and the time of the crossings of the threshold signal level as the data toggles between logic states. Histograms of the recorded population of the times of threshold crossings may be calculated as shown in figure 12.

Documents
Document Sharing Hub
Full document details: ISO IEC TR 14165-117-2007

The timing reference used for this subclause was chosen for ease of conceptual understanding. Using different timing references leads to different distributions but the treatment of jitter and bit errors has the same mathematical basis. Actual measurements shall use the jitter timing references specified in 6.2.3.

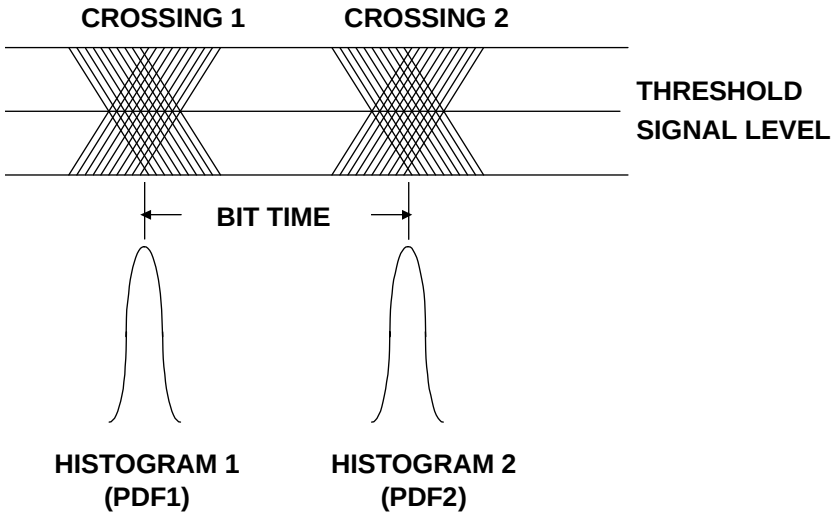

Figure 12 - Signals crossing a threshold level at different times

In the limit of infinite number of events these histograms represent continuous probability density functions (PDFs) of the population of signal events at different times when the signals cross the signal level defined. The means of the PDFs determine the bit cell boundaries. To simplify matters, the time scale is given in terms of unit intervals (UI) with 0,5 located at the exact center of the bit time as determined by the two means.

In figure 13, the BERT receiver is shown measuring the errors in the signal at the center of the eye opening at the sampling time where the tails of the transition histograms are small. A signal error occurs if a transition is on the wrong side of the sample time, st. The error conditions are (1) when a transition from histogram 1 occurs to the right of (after) st and/or (2) when a transition from histogram 2 occurs to the left of (before) st. Because the tails of a normal (Gaussian) function are infinitely long there is always some population from all transitions in every measurement (even from transitions well before or after the transitions of primary interest). Fortunately, it is usually possible to ignore contributions from non-adjacent edges because the population is very small. The remainder of this subclause considers only contributions from adjacent signal transitions.

To calculate the probability of either transition causing a signal event error due to jitter, the area under its PDF tail on the errored side of st is calculated. This calculation assumes that each PDF may be analyzed independently and that they are the same functions but displaced by exactly one unit interval. This displacement does not imply that the left and right tails of the same PDF are symmetrical. Under this assumption in figure 12 PDF1 is PDF (t) and PDF 2 is PDF (t-UI). Practically, if there is significant overlap between PDFs from adjacent edges it may be difficult to determine which edge is responsible for the population.

Documents
Document Sharing Hub
Full document details: ISO IEC TR 14165-117-2007

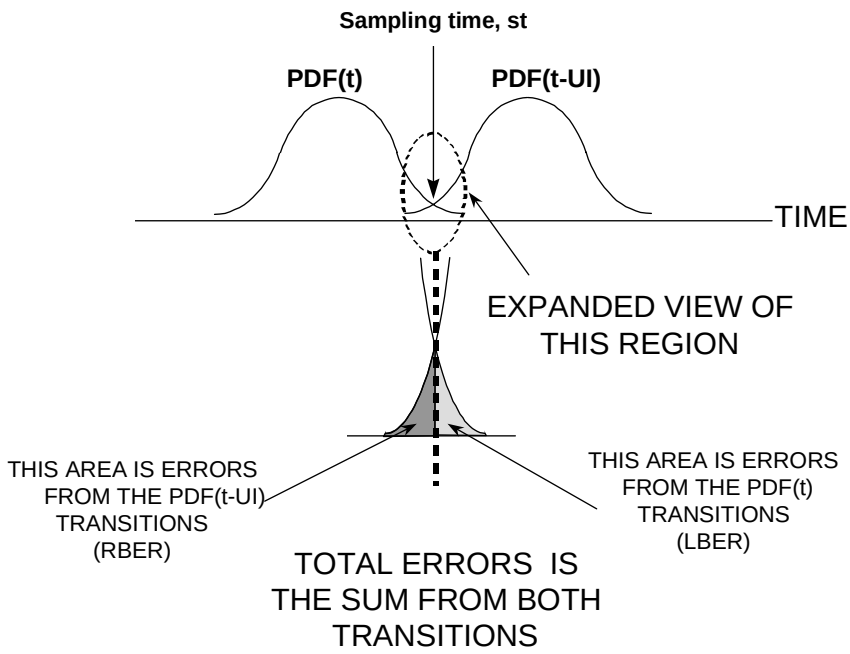

Figure 13 - Probability of signal event errors from adjacent signal transitions

NOTE st is shown at the midpoint of the bit time but may be at any point.

This area under the tail for each PDF is the cumulative distribution function, or CDF and is the bit error contribution from that tail. For PDF (t), the CDF is produced by integrating the right tail of PDF (t) from st to +∞; for PDF (t-UI) the CDF is produced by integrating the left tail of PDF (t-UI) from -∞ to st. The overall probability of bit errors due to both transitions is the sum of the two CDFs (assuming that the tails from neighboring bits contribute negligibly to the probability of error).

In normal statistics, a CDF is simply the integral of its PDF where the final value of the CDF is unity. However, in this document, to calculate a CDF that matches a bit error ratio (BER) concept for the signal, the probability of a transition-caused error is multiplied by the probability of actually having transitions at 50 % (usually interpreted as the average transition density). This discussion assumes typical data streams have a transition at 50 % of the bits (i.e., a transition density, TD, of 50 %).

The following describes the properties of the jitter CDF:

a) each total jitter PDF has an area of unity;
b) BER = CDF = TD * integral of PDF (the jitter CDF includes the transition density factor);
c) the CDF reaches a maximum value of TD, not unity.

From this point on in the document the term CDF refers to the jitter CDF only.

6.5.2 Description of mathematical model

Assume a general jitter PDF, JT (t, W, σ), centered at 0 where t is time, W is the peak-to-peak value of deterministic jitter and σ is the rms value of random (Gaussian) jitter. The right tail of the PDF from the left signal transition, JT (centered at 0) causes bit errors as:

Documents
Document Sharing Hub
Full document details: ISO IEC TR 14165-117-2007

Equation 1 – Left bit error ratio

$$\mathrm{LBER}\,(\mathrm{st},\mathrm{W},\sigma) = \mathrm{TD} \cdot \int_{st}^{\infty} \mathrm{JT}(\tau, W, \sigma)\,\delta\tau$$

where st is the sampling instant in time and TD is the transition density. LBER is the CDF for the right tail of PDF(t). Similarly, the left tail of the PDF from the right signal transition JT (shifted and centered at 1 UI) causes bit errors as:

Equation 2 – Right bit error ratio

$$\mathrm{RBER}\,(\mathrm{st},\mathrm{W},\sigma) = \mathrm{TD} \cdot \int_{-\infty}^{st} \mathrm{JT}(\tau - \mathrm{UI}, W, \sigma)\,\delta\tau$$

RBER is the CDF for the left tail of PDF(t-UI).

The total BER due to jitter from both transitions, TBER, is given by (see figure 13):

Equation 3 – Total bit error ratio

$$\mathrm{TBER}\,(\mathrm{st}, \mathrm{W}, \sigma) = \mathrm{LBER}\,(\mathrm{st}, \mathrm{W}, \sigma) + \mathrm{RBER}\,(\mathrm{st}, \mathrm{W}, \sigma)$$

In a BERT scan, BER (CDF) is measured as the sample time, st, is swept between the two bit time boundaries. From these BERT scan results, the jitter in the signal may be estimated.

This is also done (simulated) below with the model by generating the CDFs. Again, summing the two CDF's yield the total probability of error from both transitions. This expression indicates the BER as a function of st and PDF width. This is commonly known as a BER bathtub curve.

6.5.3 Relationship between jitter and BER for random jitter distributions

This subclause demonstrates the model using only random, or Gaussian, jitter (RJ). For RJ, the key parameter to be specified is the standard deviation, σ, of the PDF. W, the deterministic jitter magnitude, is 0 in this case. $\mathrm{JT}\,(\tau, W, \sigma)$ for Gaussian jitter, centered at 0, is:

Equation 4 – Gaussian jitter PDF

$$\mathrm{JT}\,(\mathrm{t}, \mathrm{W}, \sigma) = \frac{1}{\sqrt{2 \cdot \pi}} \cdot \frac{1}{\sigma} \cdot e^{-\left(\frac{t^2}{2 \cdot \sigma^2}\right)}$$

The CDF (BER distribution) for a Gaussian PDF (jitter distribution) involves error functions. Figure 14 shows plots of the PDFs (dashed) and corresponding CDFs (solid) plotted on a linear scale. (The PDFs displayed have been normalized to unity-height to make them plot better - the CDFs were generated from unity-area PDFs as required for all PDFs). The CDF includes the multiplier for transition density (50 %). In

Documents
Document Sharing Hub
Full document details: ISO IEC TR 14165-117-2007

this example, the standard deviation of the PDFs is 0,05 UI rms.

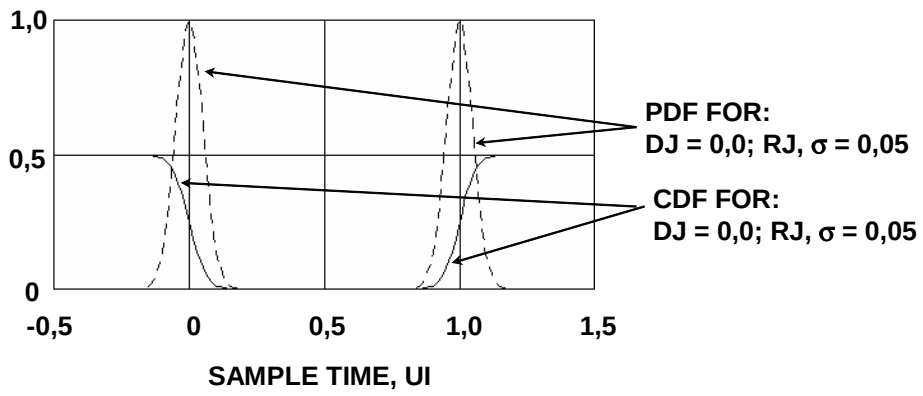

Figure 14 - Jitter eye diagram statistics, linear scale

The sum of the CDFs, shown as total BER in figure 15, from the two sides shows the bathtub shape. The bathtub appears to have a wide central region where the probability of error is small. Fibre Channel specifies the bit error ratio to be better than 10^{-12}. In order to visualize such small values of probability, a log scale is used for the BER axis. See figure 15. The eye opening based on the BER distribution is approximately 0,3 UI at 10^{-12}. Eye opening is based on CDFs not PDFs.

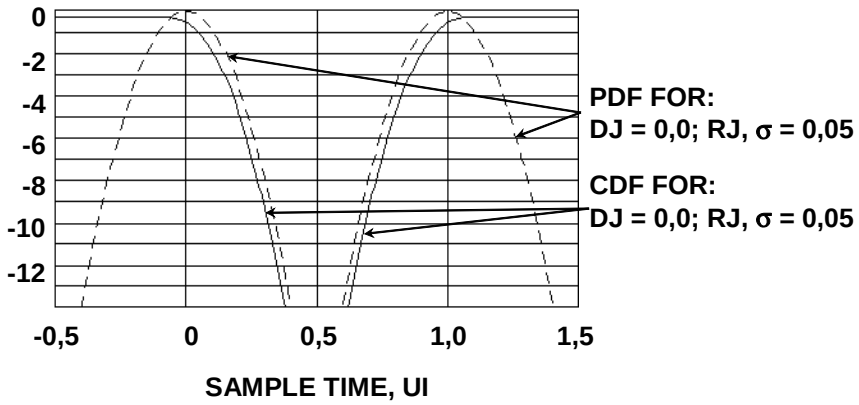

Figure 15 - Jitter eye diagram statistics, log scale

For example, a visual estimate in figure 15 based on the PDF eye opening at 10^{-12} suggests a smaller opening than the opening for the BER based at the same level. This interpretation is incorrect due to the normalization used for the displaying the (PDF) and because of the integration required to produce bit error ratios from PDFs.

BER eye opening, CDF eye opening and jitter eye opening are all equivalent terms. The total jitter (TJ) is defined by this eye opening at a specified BER. The term jitter eye opening is preserved in this document but is not the eye opening of the PDF (the jitter population).

Total jitter measurements made by some common oscilloscopes may differ significantly from the jitter eye opening based on the CDF as defined in 6.5.1.

Documents
Document Sharing Hub
Full document details: ISO IEC TR 14165-117-2007

In order to ensure that the behavior across the entire bit time is captured it is required that BERT measurements sweep “st” (see Figure 13 for the definition of “st”) across the entire bit time. See also 6.3.

Summarizing: the concept of an excluded region, or opening, applies only to the CDF or to the bit error ratio. Instruments that record the timing of signal events (i.e. record elements of the PDF) calculate the CDF from the PDFs of the signal edges. Some instruments may do this calculation internally, other instruments may not. The calculations, whether internal or external, should be done using the methods required in this document.

6.5.4 Effects of changing the standard deviation for Gaussian PDF’s

The plots in figure 16 show the error probabilities for σ values of 0,03 UI rms, 0,05 UI rms and 0,1 UI rms. The curve for σ = 0,1 UI shows there is no margin against the 10^{-12} error ratio specification. The σ = 0,03 UI curve indicates a BER based eye opening of around 58 % at 10^{-12} and σ = 0,05 UI has a BER based opening of about 0,3 UI.

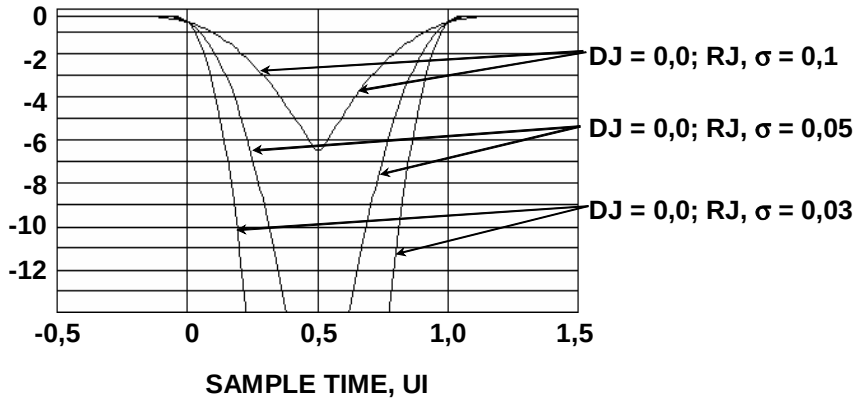

Figure 16 - Jitter eye diagram statistics pure Gaussian different sigmas

6.5.5 Common mistakes relating to statistical properties of measurements.

The following list documents common mistakes that may be made.

a) Drawing a narrow histogram box near the signal threshold on a normal oscilloscope and multiplying the calculated one standard deviation reported from the population in the histogram box by 14 and stating the result as the peak-to-peak total jitter. This generally yields significantly erroneous results because this standard deviation may include mostly DJ population.
b) Using the peak-to-peak jitter number reported by an oscilloscope histogram as the total jitter. This understates the total jitter required by MJSQ (as that existing at the 10^{-12} population level based on the CDFs).
c) Some scopes use +/- 3 sigma for peak-to-peak. Therefore, scope peak-to-peak may also overstate, for example, if the shape of the DJ pdf has a high moment and if the relative magnitude of RJ is very low.
d) In the oscilloscope eye diagram measurement mostly the deterministic components of the signal are seen due to the low 1 000 to 10 000 population levels used to form the eye diagram - ineffective visibility to Gaussian content.
e) Not using the Golden PLL for jitter measurements and simulations (see 6.10).

6.5.6 Addition of deterministic jitter

Total jitter is usually comprised of both random and deterministic components. Consider now that the PDF’s include deterministic jitter (DJ). The general theory for mapping total jitter PDF’s with DJ to BER through the CDF is identical to the theory for RJ alone.

In general, the DJ component has its own PDF and the combined total jitter PDF is a convolution of the DJ and RJ PDFs. For purposes of simplification in the present discussion, it is assumed that the DJ PDF is

Documents
Document Sharing Hub
Full document details: ISO IEC TR 14165-117-2007

comprised only of a pair of Dirac delta functions (dual-Dirac). Other PDF's are certainly possible. An example of such a DJ PDF is pure duty cycle distortion (DCD). When convolved with RJ, two Gaussian functions result, one for each of the DJ terms. If they are close together (DJ small relative to RJ), the two density functions overlap.

The magnitude of DJ, W, is given as peak-to-peak. Therefore, each Dirac delta function is offset from the mean crossing position by the peak value of DJ, W/2. The magnitude of σ for RJ, in this case, is 0. The PDF for deterministic jitter, centered at 0, is given by:

Equation 5 – DJ PDF

$$JT(t, W, \sigma) = \frac{\delta\left(t, -\frac{W}{2}\right)}{2} + \frac{\delta\left(t, \frac{W}{2}\right)}{2}$$

When convolved with random jitter, the PDF, centered at 0, becomes:

Equation 6 – PDF for DJ convolved with RJ

$$JT(t, W, \sigma) = \frac{1}{2 \cdot \sqrt{2 \cdot \pi}} \cdot \frac{1}{\sigma} \cdot \left(e^{-\left[\frac{\left(t - \frac{W}{2}\right)^2}{2 \cdot \sigma^2}\right]} + e^{-\left[\frac{\left(t + \frac{W}{2}\right)^2}{2 \cdot \sigma^2}\right]} \right)$$

Figure 17 shows the total jitter PDF and BER functions for 0,2 UI DJ peak-to-peak with low values of RJ (0,005 UI rms).

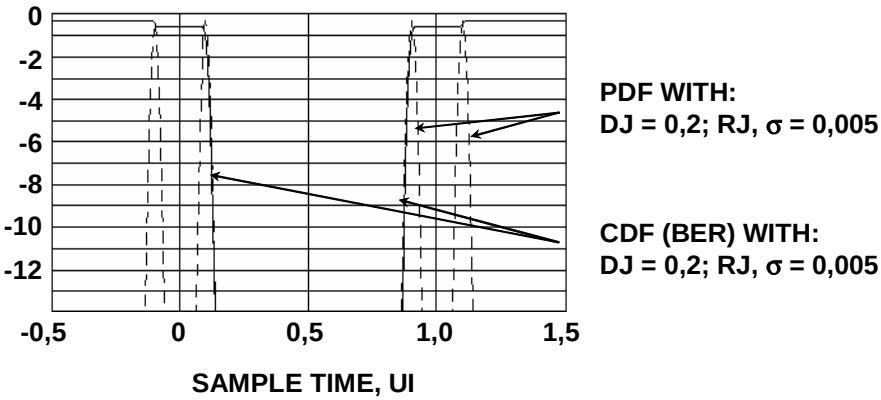

Figure 17 - Jitter eye diagram statistics, dual-Dirac function

The overall jitter eye opening at 10^{-12} is approximately 0,73 UI. Figure 18 shows the 10 base exponent of the total jitter PDF and BER functions again with DJ = 0,2 UI peak-to-peak, but now with RJ = 0,03 UI rms.

Documents
Document Sharing Hub
Full document details: ISO IEC TR 14165-117-2007

Note how the dual-Dirac function / RJ convolution terms now overlap within each total jitter histogram. The jitter eye opening at 10^{-12} is approximately 0,38 UI in figure 18.

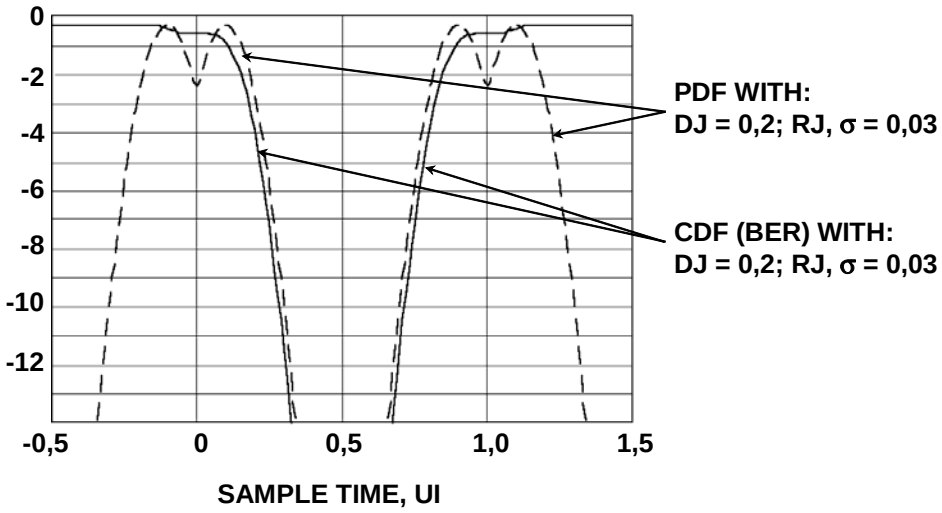

Figure 18 - Jitter eye diagram statistics, increased RJ

The eye may be closed by DJ and RJ in different combinations. Figure 19 shows 3 combinations, with each showing approximately 0,3 UI eye opening at 10^{-12}.

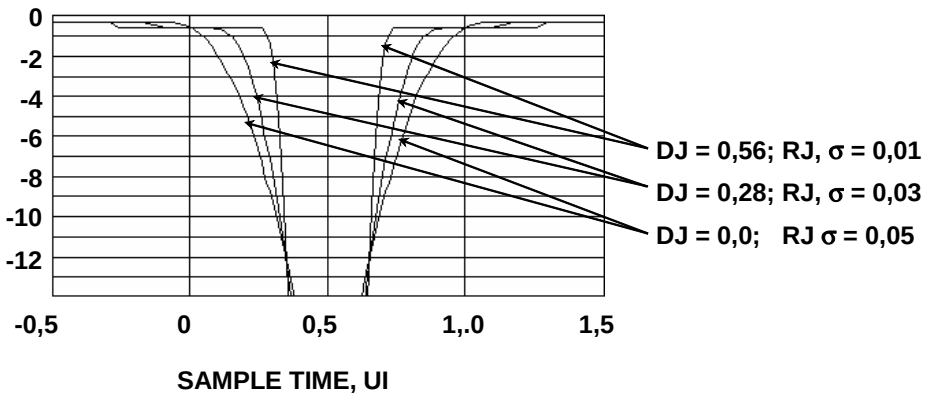

Figure 19 - Various combinations of DJ and RJ

A convenient way to present histogram results acquired at specific signal level is the bathtub format shown in Figure 20. This log-linear plot format shows approximately straight lines for normal distributions in the tail regions. Sometimes extrapolation to low population levels is convenient from this format.

Documents
Document Sharing Hub
Full document details: ISO IEC TR 14165-117-2007

6.6 Jitter eye mask methodology for signal quality specification

A generalized, simplified form of the CDF is shown in figure 20.

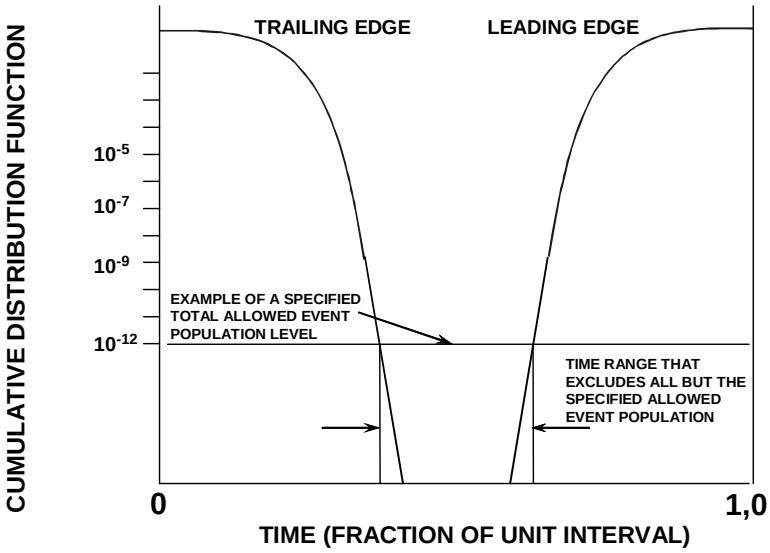

Figure 20 - General form for the CDF bathtub curve at the specified signal level

The CDF bathtub curve is a convenient way to specify the acceptable limits for the time range where all except the allowed population of events may occur. In Figure 20 a 10^{-12} fractional population is shown as an example where the time range is measured. Since this time range may be expressed as a simple number it lends itself to use in describing the acceptable limits at other signal levels.

Notice that the low population time range occurs near the center of the bit time where the signal is the most stable and where the internal strobe in the receiver (if an internal strobe methodology is used) latches the signal as a high or low state.

When the time range and time values at the allowed population (see Figure 20) and at all signal levels are combined into a single graphical representation the result is a concise specification of the total signal quality requirements at all signal levels. A direct connection between a small family of limiting bathtub curves at different signal levels is shown three dimensionally in figure 21.

Documents
Document Sharing Hub
Full document details: ISO IEC TR 14165-117-2007

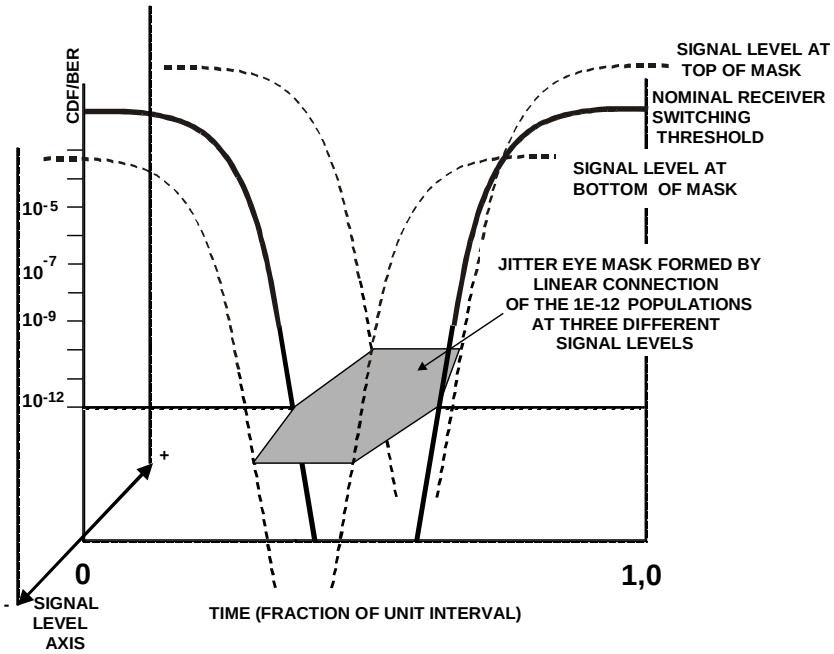

Figure 21 - Relationship of a jitter eye mask to a family of limiting bathtub curves

Two key points concern the relationship of a jitter eye mask to bathtub curves:

a) the shape and size of the mask is expected to depend significantly on the CDF level chosen. For example if 10^{-9} were used instead of 10^{-12} in figure 21 the mask would be larger in all time dimensions;
b) the bathtub curves represent a signal that just meets the eye requirement at the specified CDF level - actual bathtub curves depend on the sample under test and measurement details and are NOT used to define the jitter eye mask.

Only the limiting behavior at a single CDF level and for a single signal measurement process is specified by the mask.

The signal should not exist (as detected by sampling) within the excluded region more often than the allowed population for any signal level. In other words, bathtub curves from compliant signals at all signal levels shall not encroach inside the mask at the specified population level. This is the essence of determining whether a signal is compliant with the jitter eye mask as described in more detail in 6.7.

Jitter eye masks are usually drawn two dimensionally, as shown in Figure 22.

Documents
Document Sharing Hub
Full document details: ISO IEC TR 14165-117-2007