INTERNATIONAL STANDARD

ISO/IEEE 11073-10427

First edition
2018-01

Health informatics — Personal health device communication —

Part 10427: Device specialization — Power status monitor of personal health devices

Informatique de santé — Communication entre dispositifs de santé personnels —

Partie 10427: Spécialisation des dispositifs — Moniteur de l'état de puissance des dispositifs de santé personnels

Reference number
ISO/IEEE 11073-10427:2018(E)

© IEEE 2017

Documents
Document Sharing Hub

Full document details: ISO IEEE 11073-10427-2018

COPYRIGHT PROTECTED DOCUMENT

© IEEE 2017

All rights reserved. Unless otherwise specified, no part of this publication may be reproduced or utilized otherwise in any form or by any means, electronic or mechanical, including photocopying, or posting on the internet or an intranet, without prior written permission. Permission can be requested from either ISO or IEEE at the address below or ISO's member body in the country of the requester.

ISO copyright office
Ch. de Blandonnet 8 • CP 401
CH-1214 Vernier, Geneva, Switzerland
Tel. +41 22 749 01 11
Fax +41 22 749 09 47
copyright@iso.org
www.iso.org

Institute of Electrical and Electronics Engineers, Inc
3 Park Avenue, New York
NY 10016-5997, USA

stds.ipr@ieee.org
www.ieee.org

© IEEE 2017 – All rights reserved

Documents
Document Sharing Hub

Full document details: ISO IEEE 11073-10427-2018

Foreword

ISO (the International Organization for Standardization) is a worldwide federation of national standards bodies (ISO member bodies). The work of preparing International Standards is normally carried out through ISO technical committees. Each member body interested in a subject for which a technical committee has been established has the right to be represented on that committee. International organizations, governmental and non-governmental, in liaison with ISO, also take part in the work. ISO collaborates closely with the International Electrotechnical Commission (IEC) on all matters of electrotechnical standardization.

IEEE Standards documents are developed within the IEEE Societies and the Standards Coordinating Committees of the IEEE Standards Association (IEEE-SA) Standards Board. The IEEE develops its standards through a consensus development process, approved by the American National Standards Institute, which brings together volunteers representing varied viewpoints and interests to achieve the final product. Volunteers are not necessarily members of the Institute and serve without compensation. While the IEEE administers the process and establishes rules to promote fairness in the consensus development process, the IEEE does not independently evaluate, test, or verify the accuracy of any of the information or the soundness of any judgments contained in its standards.

The main task of technical committees is to prepare International Standards. Draft International Standards adopted by the technical committees are circulated to the member bodies for voting. Publication as an International Standard requires approval by at least 75 % of the member bodies casting a vote.

Attention is called to the possibility that implementation of this standard may require the use of subject matter covered by patent rights. By publication of this standard, no position is taken with respect to the existence or validity of any patent rights in connection therewith. ISO/IEEE is not responsible for identifying essential patents or patent claims for which a license may be required, for conducting inquiries into the legal validity or scope of patents or patent claims or determining whether any licensing terms or conditions provided in connection with submission of a Letter of Assurance or a Patent Statement and Licensing Declaration Form, if any, or in any licensing agreements are reasonable or non-discriminatory. Users of this standard are expressly advised that determination of the validity of any patent rights, and the risk of infringement of such rights, is entirely their own responsibility. Further information may be obtained from ISO or the IEEE Standards Association.

ISO/IEEE 11073-10427 was prepared by the IEEE 11073 Standards Committee of the IEEE Engineering in Medicine and Biology Society (as IEEE Std 11073-10427-2016). It was adopted by Technical Committee ISO/TC 215, *Health informatics*, in parallel with its approval by the ISO member bodies, under the “fast-track procedure” defined in the Partner Standards Development Organization cooperation agreement between ISO and IEEE. IEEE is responsible for the maintenance of this document with participation and input from ISO member bodies.

© IEEE 2017 – All rights reserved

Documents
Document Sharing Hub
Full document details: ISO IEEE 11073-10427-2018

Documents
Document Sharing Hub

Full document details: ISO IEEE 11073-10427-2018

IEEE Std 11073-10427™-2016

Health informatics—Personal health device communication

Part 10427: Device specialization—Power Status Monitor of Personal Health Devices

Sponsor

IEEE 11073™ Standards Committee
of the
IEEE Engineering in Medicine and Biology Society

Approved 22 September 2016

IEEE-SA Standards Board

Documents
Document Sharing Hub

Full document details: ISO IEEE 11073-10427-2018

Abstract: Guidelines for establishing criteria for application, performance, interchangeability, tests, life cycle costs, and safety requirements of traction power rectifier transformers are established in this standard. Set forth are the electrical, mechanical and thermal design, manufacturing, and testing requirements for traction power rectifier transformers for dc electrification systems. Covered in this standard are liquid-immersed and dry-type transformers, including those with cast coil and epoxy resin encapsulated windings.

Keywords: basic lightning impulse insulation, BIL, commutating impedance, design optimization, electrical requirements, factory tests, ferroresonance, heavy rail, hot spot, IEEE 1653.1™, light rail, load cycle, overvoltage transient, partial discharge (PD) service conditions, tests, traction power duty cycle, traction power rectifier transformers, transit application

The Institute of Electrical and Electronics Engineers, Inc.
3 Park Avenue, New York, NY 10016-5997, USA

Copyright © 2017 by The Institute of Electrical and Electronics Engineers, Inc.
All rights reserved. Published 3 February 2017. Printed in the United States of America.

IEEE is a registered trademark in the U.S. Patent & Trademark Office, owned by The Institute of Electrical and Electronics Engineers, Incorporated.

No part of this publication may be reproduced in any form, in an electronic retrieval system or otherwise, without the prior written permission of the publisher.

PDF: ISBN 978-1-5044-2268-0 STD21081
Print: ISBN 978-1-5044-2269-7 STDPD21081

IEEE prohibits discrimination, harassment, and bullying.
For more information, visit http://www.ieee.org/web/aboutus/whatis/policies/p9-26.html.

Copyright © 2017 IEEE. All rights reserved.

Documents
Document Sharing Hub

Full document details: ISO IEEE 11073-10427-2018

Important Notices and Disclaimers Concerning IEEE Standards Documents

IEEE documents are made available for use subject to important notices and legal disclaimers. These notices and disclaimers, or a reference to this page, appear in all standards and may be found under the heading "Important Notices and Disclaimers Concerning IEEE Standards Documents." They can also be obtained on request from IEEE or viewed at http://standards.ieee.org/IPR/disclaimers.html.

Notice and Disclaimer of Liability Concerning the Use of IEEE Standards Documents

IEEE Standards documents (standards, recommended practices, and guides), both full-use and trial-use, are developed within IEEE Societies and the Standards Coordinating Committees of the IEEE Standards Association ("IEEE-SA") Standards Board. IEEE ("the Institute") develops its standards through a consensus development process, approved by the American National Standards Institute ("ANSI"), which brings together volunteers representing varied viewpoints and interests to achieve the final product. IEEE Standards are documents developed through scientific, academic, and industry-based technical working groups. Volunteers in IEEE working groups are not necessarily members of the Institute and participate without compensation from IEEE. While IEEE administers the process and establishes rules to promote fairness in the consensus development process, IEEE does not independently evaluate, test, or verify the accuracy of any of the information or the soundness of any judgments contained in its standards.

IEEE Standards do not guarantee or ensure safety, security, health, or environmental protection, or ensure against interference with or from other devices or networks. Implementers and users of IEEE Standards documents are responsible for determining and complying with all appropriate safety, security, environmental, health, and interference protection practices and all applicable laws and regulations.

IEEE does not warrant or represent the accuracy or content of the material contained in its standards, and expressly disclaims all warranties (express, implied and statutory) not included in this or any other document relating to the standard, including, but not limited to, the warranties of: merchantability; fitness for a particular purpose; non-infringement; and quality, accuracy, effectiveness, currency, or completeness of material. In addition, IEEE disclaims any and all conditions relating to: results; and workmanlike effort. IEEE standards documents are supplied "AS IS" and "WITH ALL FAULTS."

Use of an IEEE standard is wholly voluntary. The existence of an IEEE standard does not imply that there are no other ways to produce, test, measure, purchase, market, or provide other goods and services related to the scope of the IEEE standard. Furthermore, the viewpoint expressed at the time a standard is approved and issued is subject to change brought about through developments in the state of the art and comments received from users of the standard.

In publishing and making its standards available, IEEE is not suggesting or rendering professional or other services for, or on behalf of, any person or entity nor is IEEE undertaking to perform any duty owed by any other person or entity to another. Any person utilizing any IEEE Standards document, should rely upon his or her own independent judgment in the exercise of reasonable care in any given circumstances or, as appropriate, seek the advice of a competent professional in determining the appropriateness of a given IEEE standard.

IN NO EVENT SHALL IEEE BE LIABLE FOR ANY DIRECT, INDIRECT, INCIDENTAL, SPECIAL, EXEMPLARY, OR CONSEQUENTIAL DAMAGES (INCLUDING, BUT NOT LIMITED TO: PROCUREMENT OF SUBSTITUTE GOODS OR SERVICES; LOSS OF USE, DATA, OR PROFITS; OR BUSINESS INTERRUPTION) HOWEVER CAUSED AND ON ANY THEORY OF LIABILITY, WHETHER IN CONTRACT, STRICT LIABILITY, OR TORT (INCLUDING NEGLIGENCE OR OTHERWISE) ARISING IN ANY WAY OUT OF THE PUBLICATION, USE OF, OR RELIANCE UPON ANY STANDARD, EVEN IF ADVISED OF THE POSSIBILITY OF SUCH DAMAGE AND REGARDLESS OF WHETHER SUCH DAMAGE WAS FORESEEABLE.

Copyright © 2017 IEEE. All rights reserved.

Documents
Document Sharing Hub

Full document details: ISO IEEE 11073-10427-2018

Translations

The IEEE consensus development process involves the review of documents in English only. In the event that an IEEE standard is translated, only the English version published by IEEE should be considered the approved IEEE standard.

Official statements

A statement, written or oral, that is not processed in accordance with the IEEE-SA Standards Board Operations Manual shall not be considered or inferred to be the official position of IEEE or any of its committees and shall not be considered to be, or be relied upon as, a formal position of IEEE. At lectures, symposia, seminars, or educational courses, an individual presenting information on IEEE standards shall make it clear that his or her views should be considered the personal views of that individual rather than the formal position of IEEE.

Comments on standards

Comments for revision of IEEE Standards documents are welcome from any interested party, regardless of membership affiliation with IEEE. However, IEEE does not provide consulting information or advice pertaining to IEEE Standards documents. Suggestions for changes in documents should be in the form of a proposed change of text, together with appropriate supporting comments. Since IEEE standards represent a consensus of concerned interests, it is important that any responses to comments and questions also receive the concurrence of a balance of interests. For this reason, IEEE and the members of its societies and Standards Coordinating Committees are not able to provide an instant response to comments or questions except in those cases where the matter has previously been addressed. For the same reason, IEEE does not respond to interpretation requests. Any person who would like to participate in revisions to an IEEE standard is welcome to join the relevant IEEE working group.

Comments on standards should be submitted to the following address:

Secretary, IEEE-SA Standards Board
445 Hoes Lane
Piscataway, NJ 08854 USA

Laws and regulations

Users of IEEE Standards documents should consult all applicable laws and regulations. Compliance with the provisions of any IEEE Standards document does not imply compliance to any applicable regulatory requirements. Implementers of the standard are responsible for observing or referring to the applicable regulatory requirements. IEEE does not, by the publication of its standards, intend to urge action that is not in compliance with applicable laws, and these documents may not be construed as doing so.

Copyrights

IEEE draft and approved standards are copyrighted by IEEE under U.S. and international copyright laws. They are made available by IEEE and are adopted for a wide variety of both public and private uses. These include both use, by reference, in laws and regulations, and use in private self-regulation, standardization, and the promotion of engineering practices and methods. By making these documents available for use and adoption by public authorities and private users, IEEE does not waive any rights in copyright to the documents.

Copyright © 2017 IEEE. All rights reserved.

Documents
Document Sharing Hub

Full document details: ISO IEEE 11073-10427-2018

Photocopies

Subject to payment of the appropriate fee, IEEE will grant users a limited, non-exclusive license to photocopy portions of any individual standard for company or organizational internal use or individual, non-commercial use only. To arrange for payment of licensing fees, please contact Copyright Clearance Center, Customer Service, 222 Rosewood Drive, Danvers, MA 01923 USA; +1 978 750 8400. Permission to photocopy portions of any individual standard for educational classroom use can also be obtained through the Copyright Clearance Center.

Updating of IEEE Standards documents

Users of IEEE Standards documents should be aware that these documents may be superseded at any time by the issuance of new editions or may be amended from time to time through the issuance of amendments, corrigenda, or errata. An official IEEE document at any point in time consists of the current edition of the document together with any amendments, corrigenda, or errata then in effect.

Every IEEE standard is subjected to review at least every ten years. When a document is more than ten years old and has not undergone a revision process, it is reasonable to conclude that its contents, although still of some value, do not wholly reflect the present state of the art. Users are cautioned to check to determine that they have the latest edition of any IEEE standard.

In order to determine whether a given document is the current edition and whether it has been amended through the issuance of amendments, corrigenda, or errata, visit the IEEE Xplore at http://ieeexplore.ieee.org/ or contact IEEE at the address listed previously. For more information about the IEEE-SA or IEEE's standards development process, visit the IEEE-SA Website at http://standards.ieee.org.

Errata

Errata, if any, for all IEEE standards can be accessed on the IEEE-SA Website at the following URL: http://standards.ieee.org/findstds/errata/index.html. Users are encouraged to check this URL for errata periodically.

Patents

Attention is called to the possibility that implementation of this standard may require use of subject matter covered by patent rights. By publication of this standard, no position is taken by the IEEE with respect to the existence or validity of any patent rights in connection therewith. If a patent holder or patent applicant has filed a statement of assurance via an Accepted Letter of Assurance, then the statement is listed on the IEEE-SA Website at http://standards.ieee.org/about/sasb/patcom/patents.html. Letters of Assurance may indicate whether the Submitter is willing or unwilling to grant licenses under patent rights without compensation or under reasonable rates, with reasonable terms and conditions that are demonstrably free of any unfair discrimination to applicants desiring to obtain such licenses.

Essential Patent Claims may exist for which a Letter of Assurance has not been received. The IEEE is not responsible for identifying Essential Patent Claims for which a license may be required, for conducting inquiries into the legal validity or scope of Patents Claims, or determining whether any licensing terms or conditions provided in connection with submission of a Letter of Assurance, if any, or in any licensing agreements are reasonable or non-discriminatory. Users of this standard are expressly advised that determination of the validity of any patent rights, and the risk of infringement of such rights, is entirely their own responsibility. Further information may be obtained from the IEEE Standards Association.

Copyright © 2017 IEEE. All rights reserved.

Documents
Document Sharing Hub

Full document details: ISO IEEE 11073-10427-2018

Participants

At the time this standard was submitted to the IEEE-SA Standards Board for approval, the 11073 Personal Health Device Working Group had the following membership:

Daidi Zhong, *Co-Chair*
Michael J. Kirwan, *Co-Chair*
Miriam L. Makhlouf, *Vice Chair*

Karsten Aalders
Charles R. Abbruscato
Nabil Abujbara
Maher Abuzaid
James Agnew
Haidar Ahmad
Manfred Aigner
Jorge Alberola
Murtaza Ali
Rolf Ambuehl
David Aparisi
Paolo Ariano
Lawrence Arne
Diego B. Arquillo
Serafin Arroyo
Muhammad Asim
Merat Bagha
Doug Baird
David Baker
Anindya Bakshi
Ananth Balasubramanian
Sunlee Bang
M. Jonathan Barkley
Gilberto Barrón
David Bean
John Bell
Rudy Belliardi
Kathryn M. Bennett
Daniel Bernstein
George A. Bertos
Chris Biernacki
Ola Björsne
Thomas Blackadar
Marc Blanchet
Thomas Bluethner
Douglas P. Bogia
Xavier Boniface
Shannon Boucousis
Julius Broma
Lyle G. Bullock Jr.
Bernard Burg
Chris Burns
Anthony Butt
Jeremy Byford-Rew
Satya Calloji
Xiaoying Cao
Carole C. Carey
Craig Carlson
Santiago Carot-Nemesio
Randy W. Carroll
Simon Carter
Seungchul Chae
Rahul Chauhan
James Cheng
Peggy Chien
David Chiu
Chia-Chin Chong
Saeed A. Choudhary
Jinhan Chung
Malcolm Clarke
John A. Cogan
John T. Collins
Cory Condek
Todd H. Cooper
David Cornejo
Douglas Coup
Nigel Cox
Hans Crommenacker
Tomio Crosley
David Culp
Allen Curtis
Ndifor Cyril Fru
Jesús Daniel Trigo
Eyal Dassau
David Davenport
Russell Davis
Sushil K. Deka
Ciro de la Vega
Pedro de-las-Heras-Quiros
Jim DelloStritto
Matthew d'Entremont
Lane Desborough
Kent Dicks
Hyoungho Do
Xiaolian Duan
Brian Dubreuil
Sourav Dutta
Jakob Ehrensvard
Fredrik Einberg
Michihiro Enokida
Javier Escayola Calvo
Mark Estes
Leonardo Estevez
Roger Feeley
Hailing Feng
Bosco T. Fernandes
Christoph Fischer
Morten Flintrup
Joseph W. Forler
Russell Foster
Eric Freudenthal
Matthias Frohner
Ken Fuchs
Jing Gao
Xuemei Gao
Marcus Garbe
John Garguilo
Rick Geimer
Igor Gejdos
Ferenc Gerbovics
Nicolae Goga
Julian Goldman
Raul Gonzalez Gomez
Chris Gough
Channa Gowda
Charles M. Gropper
Amit Gupta
Jeff Guttmacher
Rasmus Haahr
Christian Habermann
Michael Hagerty
Jerry Hahn
Robert Hall
Nathaniel Hamming
Rickey L. Hampton
Sten Hanke
Aki Harma
Jordan Hartmann
Kai Hassing
Marc Daniel Haunschild
Wolfgang Heck
Nathaniel Heintzman
Charles Henderson
Jun-Ho Her
Takashi Hibino
Timothy L. Hirou
Allen Hobbs
Alex Holland
Arto Holopainen
Kris Holtzclaw
Robert Hoy
Frank Hsu
Anne Huang
Sen-Der Huang
Zhiqiang Huang

Copyright © 2017 IEEE. All rights reserved.

Documents
Document Sharing Hub

Full document details: ISO IEEE 11073-10427-2018

Ron Huby
David Hughes
Robert D. Hughes
Jiyoung Huh
Hugh Hunter
Hitoshi Ikeda
Yutaka Ikeda
Philip O. Isaacson
Atsushi Ito
Michael Jaffe
Praduman Jain
Wei Jin
Danny Jochelson
Phaneeth Junga
Akiyoshi Kabe
Steve Kahle
Tomio Kamioka
Kei Kariya
Andy Kaschl
Junzo Kashihara
Kohichi Kashiwagi
Ralph Kent
Laurie M. Kermes
Ikuo Keshi
Junhyung Kim
Minho Kim
Min-Joon Kim
Taekon Kim
Tetsuya Kimura
David Klonoff
Alfred Kloos
Jeongmee Koh
Jean-Marc Koller
John Koon
Patty Krantz
Raymond Krasinski
Alexander Kraus
Ramesh Krishna
Geoffrey Kruse
Falko Kuester
Rafael Lajara
Pierre Landau
Jaechul Lee
JongMuk Lee
Kyong Ho Lee
Rami Lee
Sungkee Lee
Woojae Lee
Yonghee Lee
Joe Lenart
Kathryn A. Lesh
Qiong Li
Ying Li
Patrick Lichter
Jisoon Lim
Joon-Ho Lim
John Lin
Wei-Jung Lo
Charles Lowe
Don Ludolph
Christian Luszick
Bob MacWilliams
Srikkanth Madhurbootheswaran
Miriam L. Makhlouf
Romain Marmot
Sandra Martinez
Miguel Martínez de Espronceda Cámara
Peter Mayhew
Jim McCain
László Meleg
Alexander Mense
Jinsei Miyazaki
Erik Moll
Darr Moore
Carsten Mueglitz
Piotr Murawski
Soundharya Nagasubramanian
Jae-Wook Nah
Alex Neefus
Trong-Nghia Nguyen-Dobinsky
Michael E. Nidd
Tetsu Nishimura
Jim Niswander
Hiroaki Niwamoto
Thomas Norgall
Anand Noubade
Yoshiteru Nozoe
Abraham Ofek
Brett Olive
Begonya Otal
Marco Paleari
Charles Palmer
Bud Panjwani
Carl Pantiskas
Harry P. Pappas
Hanna Park
Jong-Tae Park
Myungeun Park
Soojun Park
Phillip E. Pash
TongBi Pei
Lucian Pestritu
Soren Petersen
James Petisce
Peter Piction
Michael Pliskin
Jeff Price
Harald Prinzhorn
Harry Qiu
Arif Rahman
Tanzilur Rahman
Steve Ray
Phillip Raymond
Tim Reilly
Barry Reinhold
Brian Reinhold
Melvin I. Reynolds
John G. Rhoads
Jeffrey S. Robbins
Moskowitz Robert
Chris Roberts
Timothy Robertson
David Rosales
Bill Saltzstein
Benedikt Salzbrunn
Giovanna Sannino
Jose A. Santos-Cadenas
Stefan Sauermann
John Sawyer
Guillaume Schatz
Alois Schloegl
Paul S. Schluter
Lars Schmitt
Mark G. Schnell
Richard A. Schrenker
Antonio Scorpiniti
Kwang Seok Seo
Riccardo Serafin
Sid Shaw
Frank Shen
Bozhi Shi
Min Shih
Mazen Shihabi
Redmond Shouldice
Sternly K. Simon
Marjorie Skubic
Robert Smith
Ivan Soh
Motoki Sone
Emily Sopensky
Rajagopalan Srinivasan
Andreas Staubert
Nicholas Steblay
Beth Stephen
Lars Steubesand
John (Ivo) Stivoric
Raymond A. Strickland
Chandrasekaran Subramaniam
Hermanni Suominen
Lee Surprenant
Ravi Swami
Ray Sweidan
Jin Tan
Yi Tang
Haruyuyki Tatsumi
John W. Thomas
Jonas Tirén
Alexandra Todiruta
Janet Traub
Gary Tschautscher
Masato Tsuchid
Ken Tubman

Copyright © 2017 IEEE. All rights reserved.

Documents
Document Sharing Hub

Full document details: ISO IEEE 11073-10427-2018

Yoshihiro Uchida
Akib Uddin
Sunil Unadkat
Fabio Urbani
Philipp Urbauer
Laura Vanzago
Alpo Värri
Dalimar Velez
Rudi Voon
Isobel Walker
David Wang
Jerry P. Wang
Yao Wang
Yi Wang
Steve Warren
Fujio Watanabe
Toru Watsuji
Mike Weng
Kathleen Wible
Paul Williamson
Jan Wittenber
Jia-Rong Wu
Will Wykeham
Ariton Xhafa
Yaxi Yan
Ricky Yang
Melanie S. Yeung
Done-Sik Yoo
Jianchao Zeng
Jason Zhang
Zhiqiang Zhang
Thomas Zhao
Miha Zoubek
Szymon Zyskoter

The following members of the individual balloting committee voted on this standard. Balloters may have voted for approval, disapproval, or abstention.

Lyle Bullock
Keith Chow
Malcolm Clarke
Sourav Dutta
Christoph Fischer
Randall Groves
Werner Hoelzl
Noriyuki Ikeucki
Atsushi Ito
Piotr Karocki
Erik Moll
Michael Newman
Melvin Reynolds
Bartien Sayogo
Walter Struppler
Jan Wittenber
Paul Work
Oren Yuen
Daidi Zhong

When the IEEE-SA Standards Board approved this standard on 22 September 2016, it had the following membership:

Jean-Philippe Faure, *Chair*
Ted Burse, *Vice Chair*
John D. Kulick, *Past Chair*
Konstantinos Karachalios, *Secretary*

Chuck Adams
Masayuki Ariyoshi
Stephen Dukes
Jianbin Fan
J. Travis Griffith
Gary Hoffman
Ronald W. Hotchkiss
Michael Janezic
Joseph L. Koepfinger*
Hung Ling
Kevin Lu
Annette D. Reilly
Gary Robinson
Mehmet Ulema
Yingli Wen
Howard Wolfman
Don Wright
Yu Yuan
Daidi Zhong

*Member Emeritus

Copyright © 2017 IEEE. All rights reserved.
Documents
Document Sharing Hub
Full document details: ISO IEEE 11073-10427-2018

Introduction

This introduction is not part of IEEE Std 11073-10427-2016, Health Informatics—Personal health device communication—Part 10427: Device Specialization—Power Status Monitor of Personal Health Devices.

ISO/IEEE 11073 standards enable communication between medical devices and external computer systems. This document uses the optimized framework created in ISO/IEEE 11073-20601 and describes a specific, interoperable communication approach for power status monitor of personal health devices (PHDs). These standards align with and draw on the existing clinically focused standards to provide support for communication of data from clinical or PHDs.

Copyright © 2017 IEEE. All rights reserved.

Documents
Document Sharing Hub

Full document details: ISO IEEE 11073-10427-2018

Contents

1. Overview 12
1.1 Scope 12
1.2 Purpose 12
1.3 Context 12

2. Normative references 13

3. Definitions, acronyms, and abbreviations 13
3.1 Definitions 13
3.2 Acronyms and abbreviations 14

4. Introduction to ISO/IEEE 11073 personal health devices (PHDs) 14
4.1 General 14
4.2 Introduction to IEEE 11073-20601 modeling constructs 15
4.3 Compliance with other standards 15

5. Power status monitor concepts and modalities 16
5.1 General 16
5.2 Use case 16

6. Power status monitor domain information model 16
6.1 Overview 16
6.2 Class extensions 16
6.3 Object instance diagram 17
6.4 Types of configuration 18
6.5 Profiles 19
6.6 Medical device system (MDS) object 19
6.7 Numeric objects 23
6.8 Real-time sample array objects 25
6.9 Enumeration objects 25
6.10 PM-store objects 28
6.11 Scanner objects 31
6.12 Class extension objects 31
6.13 PSM information model extensibility rules 32

7. PSM service model 32
7.1 General 32
7.2 Object access services 32
7.3 Object access event report services 32

8. PSM communication model 35
8.1 Overview 35
8.2 Communication characteristics 35
8.3 Association procedure 36
8.4 Configuring procedure 37
8.5 Operating procedure 39
8.6 Time synchronization 40

9. Test associations 40
9.1 Behavior with standard configuration 40
9.2 Behavior with extended configurations 40

10. Conformance 40

Copyright © 2017 IEEE. All rights reserved.

Documents
Document Sharing Hub

Full document details: ISO IEEE 11073-10427-2018

10.1 Applicability 40
10.2 Conformance specification 41
10.3 Levels of conformance 41
10.4 Implementation conformance statements (ICS) 42

11. Simple PSM Profile: Devices that can support one-to-eight batteries 46
11.1 General concepts 46
11.2 One-to-eight batteries DIM 46

12. Advanced PSM profile: device that can support more than eight batteries 48
12.1 General concepts 48
12.2 More-than-eight batteries DIM 49

Annex A (informative) Bibliography 52

Annex B (normative) Any additional ASN.1 definitions 53

Annex C (normative) Allocation of identifiers 55

Annex D (informative) Message sequence examples 57

Annex E (informative) Protocol data unit (PDU) examples 60

Copyright © 2017 IEEE. All rights reserved.

Documents
Document Sharing Hub

Full document details: ISO IEEE 11073-10427-2018

Documents
Document Sharing Hub

Full document details: ISO IEEE 11073-10427-2018

Health informatics—Personal health device communication

Part 10427: Device specialization—Power Status Monitor of Personal Health Devices

1. Overview

1.1 Scope

This standard establishes a normative definition of communication between devices containing a power source (agents) and managers (e.g., cell phones, personal computers, personal health appliances, set-top boxes) in a manner that enables plug-and-play interoperability. Using existing terminology, information profiles, application profile standards, and transport standards as defined in other ISO/IEEE 11073 standards, this standard defines a common core of communication functionality of personal health devices (PHDs) containing a battery, including: 1) current device power status (e.g., on mains or on battery); 2) power charge status (e.g., percent of full charge); and 3) estimated time remaining (e.g., minutes).

1.2 Purpose

This standard addresses a need for an openly defined, independent standard for power status information exchange from PHDs to manager(s) (e.g., cell phones, personal computers, personal health appliances, and set-top boxes). Interoperability is the key to growing the potential market for monitoring the power status of devices and enabling people to be better informed participants in the management of their health.

1.3 Context

See ISO/IEEE 11073-20601:2016[1] for an overview of the environment within which this standard is written.

This standard defines the specialization for monitoring the power status of PHDs, as well as being a specific agent type. It also provides a description of the concepts, its capabilities, and its implementation according to this standard.

[1]Information on references can be found in Clause 2.

Copyright © 2017 IEEE. All rights reserved.

Documents
Document Sharing Hub

Full document details: ISO IEEE 11073-10427-2018

This standard is based on ISO/IEEE 11073-20601:2016, ISO/IEEE 11073-20601a:2010, and IEEE Std 11073-20601-2008, which in turn draw information from both ISO/IEEE 11073-10201:2004 [B8] and ISO/IEEE 11073-20101:2004 [B9].[2] The medical device encoding rules (MDERs) used within this standard are fully described in Annex F of ISO/IEEE 11073-20601:2016.

This standard reproduces relevant portions of the nomenclature found in ISO/IEEE 11073-10101a:2015 [B6] and in ISO/IEEE 11073-10101:2004 [B7] and adds new nomenclature codes for the purposes of this standard. Together this standard, ISO/IEEE 11073-20601:2016, and IEEE Std 11073-20601a:2010 document all implementation required nomenclature codes.

NOTE 1—IEEE Std 11073-20601a:2010 is an amendment to IEEE Std 11073-20601:2008. It contains new material and corrections and does not copy the content of ISO/IEEE 11073-20601:2010. Any reference to ISO/IEEE 11073-20601:2016 refers to the document that is obtained after applying this new material and corrections to ISO/IEEE 11073-20601:2010.[3]

NOTE 2—In this standard, ISO/IEEE 11073-104zz is used to refer to the collection of device specialization standards that utilize ISO/IEEE 11073-20601:2016, where zz can be any number from 01 to 99, inclusive.

2. Normative references

The following referenced documents are indispensable for the application of this document (i.e., they must be understood and used, so that each referenced document is cited in text and its relationship to this document is explained). For dated references, only the edition cited applies. For undated references, the latest edition of the referenced document (including any amendments or corrigenda) applies.

IEEE Std 11073-20601™-2008, Health informatics—Personal health device communication—Part 20601: Application profile—Optimized exchange protocol. (Use with IEEE Std 11073-20601a-2010.)[4,5]

ISO/IEEE 11073-20601:2016, Health informatics—Personal health device communication—Application profile—Optimized Exchange Protocol.[6]

ISO/IEEE 11073-20601a:2010, Health informatics—Personal health device communication—Application Profile—Optimized Exchange Protocol—Amendment 1.

3. Definitions, acronyms, and abbreviations

3.1 Definitions

For the purposes of this document, the following terms and definitions apply. The *IEEE Standards Dictionary Online* should be consulted for terms not defined in this clause.[7]

agent: A node that collects and transmits personal health data to an associated manager.

class: In object-oriented modeling, it describes the attributes, methods, and events that objects instantiated from the class utilize.

device: A term used to refer to a physical apparatus implementing either an agent or a manager role.

[2]The numbers in brackets correspond to those of the bibliography in Annex A.
[3]Notes in text, tables, and figures are given for information only and do not contain requirements needed to implement the standard.
[4]The IEEE standards or products referred to are trademarks of the Institute of Electrical and Electronics Engineers, Inc.
[5]IEEE publications are available from the Institute of Electrical and Electronics Engineers (http://standards.ieee.org/).
[6]ISO/IEEE publications are available from the International Organization for Standardization (http://www.iso.ch/) and the Institute of Electrical and Electronics Engineers (http://standards.ieee.org/).
[7]The *IEEE Standards Dictionary Online is* available at: http://ieeexplore.ieee.org/xpls/dictionary.jsp.

Copyright © 2017 IEEE. All rights reserved.

Documents
Document Sharing Hub

Full document details: ISO IEEE 11073-10427-2018

handle: An unsigned 16-bit number that is locally unique and identifies one of the object instances within an agent.

manager: A node receiving data from one or more agent systems. Some examples of managers include a cellular phone, health appliance, set-top box, or a computer system.

object: In object-oriented modeling, a particular instantiation of a class. The instantiation realizes attributes, methods, and events from the class.

obj-handle: *See:* **handle**.

personal health device (PHD): A device used in personal health applications.

power status monitor (PSM): An agent that monitors the power status of a device and communicates this to a manager.

3.2 Acronyms and abbreviations

APDU	application protocol data unit
ASN.1	Abstract Syntax Notation One
DIM	domain information model
EUI-64	extended unique identifier (64 bits)
ICS	implementation conformance statements
MDC	medical device communication
MDER	medical device encoding rules
MDS	medical device system
MOC	managed object class
OID	object identifier
PDU	protocol data unit
PHD	personal health device
PSM	power status monitor
VMO	virtual medical object
VMS	virtual medical system

4. Introduction to ISO/IEEE 11073 personal health devices (PHDs)

4.1 General

This standard and the remainder of the series of ISO/IEEE 11073 PHD standards fit in the larger context of the ISO/IEEE 11073 series of standards. The full suite of standards enables agents to interconnect and interoperate with managers and with computerized healthcare information systems. See IEEE Std 11073-20601 for a description of the guiding principles for this series of ISO/IEEE 11073 PHD standards.

IEEE Std 11073-20601 supports the modeling and implementation of an extensive set of PHDs. This standard defines aspects for monitoring power status of PHDs. It describes all aspects necessary to implement the application layer services and data exchange protocol between an ISO/IEEE 11073 PHD agent and a manager for

Copyright © 2017 IEEE. All rights reserved.

Documents
Document Sharing Hub

Full document details: ISO IEEE 11073-10427-2018

power status monitoring. This standard defines a subset of the objects and functionality contained in IEEE Std 11073-20601 and it extends and adds definitions where appropriate. All new definitions are given in Annex B, titled Abstract Syntax Notation One (ASN.1). Nomenclature codes referenced in this standard, which are not defined in IEEE Std 11073-20601, are normatively defined in Annex C.

4.2 Introduction to IEEE 11073-20601 modeling constructs

4.2.1 General

The ISO/IEEE 11073 series of standards, and in particular IEEE Std 11073-20601, is based on an object-oriented systems management paradigm. The overall system model is divided into three principal components: the domain information model (DIM), the service model, and the communication model. See IEEE Std 11073-20601 for a detailed description of the modeling constructs.

4.2.2 Domain information model

The domain information model (DIM) is a hierarchical model that describes an agent as a set of objects. These objects and their attributes represent the elements that control behavior and report on the status of the agent and the data that an agent can communicate to a manager. Communication between the agent and the manager is defined by the application protocol in IEEE Std 11073-20601.

4.2.3 Service model

The service model defines the conceptual mechanisms for the data exchange services. Such services are mapped to messages that are exchanged between the agent and the manager. Protocol messages within the ISO/IEEE 11073 series of standards are defined in ASN.1. The messages defined in IEEE Std 11073-20601 can coexist with messages defined in other standard application profiles defined in the ISO/IEEE 11073 series of standards.

4.2.4 Communication model

In general, the communication model supports the topology of one or more agents communicating over logical point-to-point connections to a single manager. For each logical point-to-point connection, the dynamic system behavior is defined by a connection state machine as specified in IEEE Std 11073-20601.

4.2.5 Implementing the models

An agent implementing this standard shall implement all mandatory elements of the information, service, and communication models as well as all conditional elements when the condition is met. The agent should implement the recommended elements, and it may implement any combination of the optional elements. A manager implementing this standard shall utilize the mandatory conditional, recommended, or optional elements. In this context, “utilize” means to use the element as part of the primary function of the manager device. For example, a manager whose primary function is to display data would need to display a piece of data in the element in order to utilize it.

4.3 Compliance with other standards

Devices that comply with this standard may also be required to comply with other domain- and device-specific standards that supersede the requirements of this standard with respect to issues including safety, reliability, and risk management. A user of this standard is expected to be familiar with all other such standards that apply and to comply with any higher specifications thus imposed.

Typically, medical devices should comply with the IEC 60601-1:2005 [B1] base standards with respect to electrical and mechanical safety and any device-specific standard as might be defined in the IEC 60601-2 [B2] series of standards. Software aspects may apply through standards such as IEC 62304:2006/EN

Copyright © 2017 IEEE. All rights reserved.

Documents
Document Sharing Hub

Full document details: ISO IEEE 11073-10427-2018

62304:2006 [B3]. Devices that comply with this standard implement higher layers of network software and utilize lower layers as appropriate to the application. The requirements on performance of such applications and conformance are defined elsewhere and are outside the scope of this standard. Moreover, the use of any medical equipment is subject to risk assessment and risk management appropriate to the application. Some relevant examples are ISO 14971:2007 [B5] and IEC 80001-1:2010 [B4]. The requirements of such risk assessment, risk management, and conformance are outside the scope of this standard.

5. Power status monitor concepts and modalities

5.1 General

This clause presents the general concepts of power status monitors (PSMs). In the context of PHDs in the ISO/IEEE 11073 family of standards, a PSM provides the functionality that monitors the power status of a PHD. The following aspects should be kept in mind when reading this specification for power status monitoring.

PHDs are usually powered by main sources or batteries. The number and types of batteries connected to a PHD can vary. PHDs may obtain measures from their power sources that indicate the current power status of the device. Some PHDs can obtain basic information about the current status of their power sources. This basic information may include: whether power is being drawn from battery or main power lines, status of charging, percentage of battery capacity remaining, and predicted amount of operational time left on the batteries.

5.2 Use case

PHDs available today are allowing more and more critical care device dependent patients to live and function at home. This greatly reduces their healthcare costs and provides a better environment for the patient as well. However, issues arise when there is disruption to the power to these devices due to inclement weather. During such disruptions, patients leave their homes and go to a hospital or other location where emergency power is available. However, this can place an added burden on these facilities that may already be inundated with patients, thus overloading their emergency power supply. This PSM device specialization is developed in part to reduce the need for patients to leave their homes during a power outage.

An example use case for this device specialization has a homecare patient dependent on a critical care device. The device is equipped with a main battery for normal portable use and an internal backup battery for hot swapping the main battery, or for emergency use in the event of main battery failure. Through the use of this PSM device specialization, a manager is able to receive information from the device about the device's power status. In the case when there is a power outage in the patient's home, the PSM would communicate with a tracking service provider providing information such as the estimated operational time remaining, capacity of each of the batteries, and which batteries are active, etc. The tracking service provider can then, in turn, confirm that the adverse weather event has occurred and notify the patient's care team accordingly.

6. Power status monitor domain information model

6.1 Overview

This clause describes the DIM of the PSM.

6.2 Class extensions

In this standard, extensions are defined with respect to IEEE Std 11073-20601-2014.

The following two attributes are an extension to the Enumeration Class:

Copyright © 2017 IEEE. All rights reserved.

Documents
Document Sharing Hub

Full document details: ISO IEEE 11073-10427-2018

— The Capability-Mask-Basic attribute indicates whether the corresponding bit in the Enum-Observed-Value-Basic-Bit-Str attribute is supported by the Agent.

— The State-Flag-Basic attribute indicates whether the corresponding bit in the Enum-Observed-Value-Basic-Bit-Str attribute is a state or event.

If the Enum-Observed-Value-Basic-Bit-Str attribute is used, the Capability-Mask-Basic and State-Flag-Basic attributes are mandatory. The values of the Capability-Mask-Basic and State-Flag-Basic attributes are implementation specific. Please see Annex B for the ASN.1 structures.

The Capability-Mask-Basic attribute is dynamic. The State-Flag-Basic attribute is static.

6.3 Object instance diagram

The object instance diagram of the PSM DIM, which is defined for the purposes of this standard, is shown in Figure 1.

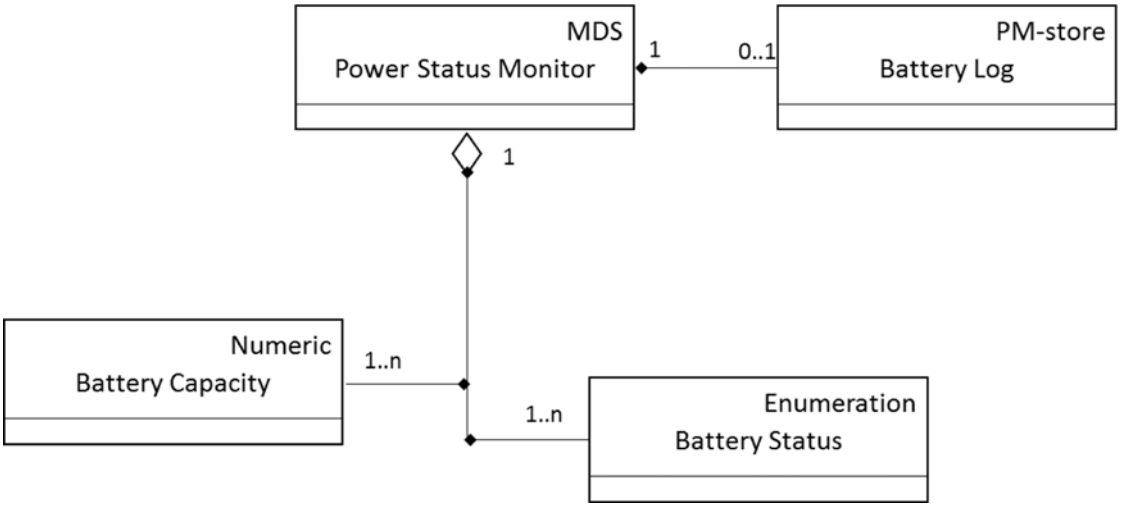

Figure 1—PSM DIM

The objects of the DIM, as shown in Figure 1, are described in 6.5 to 6.12. See 6.5 through 6.12 for descriptions of the different PSM objects. Each clause that describes an object of the PSM contains the following information:

— The nomenclature code used to identify the class of the object. One example where this code is used is the configuration event, wherein the object class is reported for each object. This allows the manager to determine whether the class of the object being specified is a numeric, real-time sample array, enumeration, scanner, or PM-store class.

— The attributes of the object. Each object has attributes that represent and convey information on the physical device and its data sources. Each object has a handle attribute that identifies the object instance within an agent. Attribute values are accessed and modified using methods such as GET and SET. Attribute types are defined using an ASN.1. The ASN.1 definitions for new attribute types specific to this standard are in Annex B, and the ASN.1 definitions for existing attribute types referenced in this standard are in IEEE Std 11073-20601.

— The methods available on the object.

Copyright © 2017 IEEE. All rights reserved.

Documents
Document Sharing Hub

Full document details: ISO IEEE 11073-10427-2018

— The potential events generated by the object. The data is sent to the manager using events.

— The available services, such as getting or setting attributes.

The attributes for each class are defined in tables that specify the name of the attribute, its value, and its qualifier. The qualifiers mean the following:

M	Attribute is Mandatory
C	Attribute is Conditional and depends on the condition stated in the Remark or Value column (if IEEE Std 11073-20601 is referenced, then it contains the conditions)
R	Attribute is Recommended
NR	Attribute is Not Recommended
O	Attribute is Optional.

Mandatory attributes shall be implemented by an agent. Conditional attributes shall be implemented if the condition applies and may be implemented otherwise. Recommended attributes should be implemented by the agent. Not recommended attributes should not be implemented by the agent. Optional attributes may be implemented on an agent.

The attributes can be static, dynamic, or observational as specified in IEEE Std 11073-20601 or this standard.

In Figure 1, there may be from one to “n” instantiations of the BatteryCapacity and BatteryStatus objects. The number “n” represents the maximum number of batteries the device can support.

6.4 Types of configuration

6.4.1 General

As specified in IEEE Std 11073-20601, there are two styles of configurations available. Subclauses 6.4.2 and 6.4.3 briefly introduce standard and extended configurations.

6.4.2 Standard configuration

Standard configurations are defined in the ISO/IEEE 11073-104zz specializations (such as this standard) and are assigned a well-known identifier (Dev-Configuration-Id). The usage of a standard configuration is negotiated at association time between the agent and the manager. If the manager acknowledges that it understands and wants to operate using the configuration, then the agent can begin sending measurements immediately. If the manager does not understand the configuration, the agent provides the configuration prior to transmitting measurement information.

A total of eight standard configurations (2700-2707) are supported. The standard configuration that should be used depends on the maximum number of batteries, n, that can be configured for use by the device at any given time, whether present or not. For each standard configuration 2700 to 2707, the standard configuration defines the number of BatteryCapacity object(s) and BatteryStatus object(s) in that configuration as (“standard configuration” – 2700 + 1). Standard configurations do not contain a PM-Store. The standard configurations should be used to monitor the power status on a continuous basis. For intermittent monitoring of power status and to provide history of battery performance, an extended configuration with PM-store should be used.

Copyright © 2017 IEEE. All rights reserved.

Documents
Document Sharing Hub

Full document details: ISO IEEE 11073-10427-2018

In an agent where a battery is supported but not initially present, then the "BatteryStatus" object for that battery shall report this status in an initial event report. Thereafter, the agent should send no further event reports of status of that battery unless this status changes.

Agents that follow this standard and have an extended configuration with PM-Store are not required to support any standard configuration, as specified by IEEE Std 11073-20601.

6.4.3 Extended configuration

In extended configurations, the agent's configuration is not predefined in a standard. The agent determines which objects, attributes, and values shall be used in a configuration, and assigns a configuration identifier. It is required that the agent supports a minimum of one battery for an extended configuration. When the agent associates with a manager, it negotiates an acceptable configuration. Typically, the manager does not recognize the agent's configuration on the first connection, so the manager responds that the agent needs to send the configuration information as a configuration event report. If, however, the manager already understands the configuration, either because it was preloaded in some way or the agent had previously associated with the manager, then the manager responds that the configuration is known and no further configuration information needs to be sent.

6.5 Profiles

6.5.1 General

A profile further constrains the objects, services, and communication model of a specialization. By profiling the device specialization, the standard provides more guidance on the specific mandatory objects that shall be implemented for that profile. This standard defines two profiles for devices that support the following: Eight or fewer batteries (see Clause 11), and greater than eight batteries (see Clause 12). A PSM device shall implement one of these profiles.

6.6 Medical device system (MDS) object

6.6.1 MDS object attributes

Table 1 summarizes the attributes of the PSM MDS object. The nomenclature code to identify the MDS object class is MDC_MOC_VMS_MDS_SIMP.

Table 1—MDS object attributes

Attribute Name	Value	Qualifier
Handle	0	M
System-Type	See IEEE Std 11073-20601.	NR
System-Type-Spec-List	{MDC_DEV_SPEC_PROFILE_PSM, 1} And Profile value: {MDC_DEV_SUB_SPEC_PROFILE_EIGHT_OR_LESS_BATTERIES, 1} OR {MDC_DEV_SUB_SPEC_PROFILE_MORE_THAN_EIGHT_BATTERIES, 1}	M
System-Model	{"Manufacturer","Model"}	M
System-Id	Extended unique identifier (64 bits) (EUI-64)	M

Table continues

Copyright © 2017 IEEE. All rights reserved.

Documents
Document Sharing Hub

Full document details: ISO IEEE 11073-10427-2018