INTERNATIONAL STANDARD

ISO/IEEE 11073-30200

First edition
2004-12-15

Health informatics — Point-of-care medical device communication —

Part 30200: Transport profile — Cable connected

Informatique de santé — Communication entre dispositifs médicaux sur le site des soins —
Partie 30200: Profil de transport — Connection par câble

Reference number
ISO/IEEE 11073-30200:2004(E)

© ISO/IEEE 2004

Documents
Document Sharing Hub
Full document details: ISO IEEE 11073-30200-2004

Documents
Document Sharing Hub

Full document details: ISO IEEE 11073-30200-2004

Health informatics — Point-of-care medical device communication — Part 30200: Transport profile — Cable connected

Sponsor

IEEE 1073™ Standard Committee

of the

IEEE Engineering in Medicine and Biology Society

Approved 30 January 2000

IEEE-SA Standards Board

Documents
Document Sharing Hub

Full document details: ISO IEEE 11073-30200-2004

PDF disclaimer

This PDF file may contain embedded typefaces. In accordance with Adobe's licensing policy, this file may be printed or viewed but shall not be edited unless the typefaces which are embedded are licensed to and installed on the computer performing the editing. In downloading this file, parties accept therein the responsibility of not infringing Adobe's licensing policy. Neither the ISO Central Secretariat nor the IEEE accepts any liability in this area.

Adobe is a trademark of Adobe Systems Incorporated.

Details of the software products used to create this PDF file can be found in the General Info relative to the file; the PDF-creation parameters were optimized for printing. Every care has been taken to ensure that the file is suitable for use by ISO member bodies and IEEE members. In the unlikely event that a problem relating to it is found, please inform the ISO Central Secretariat or the IEEE at the address given below.

Abstract: A connection-oriented transport profile and physical layer suitable for medical device communications in legacy devices is established. Communications services and protocols consistent with specifications of the Infrared Data Association are defined. These communication services and protocols are optimized for use in patient-connected bedside medical devices.
Keywords: bedside, Infrared Data Association, IrDA, legacy device, medical device, medical device communications, MIB, patient, SNTP

This ISO/IEEE document is an International Standard and is copyright-protected by ISO and the IEEE. Except as permitted under the applicable laws of the user's country, neither this ISO/IEEE standard nor any extract from it may be reproduced, stored in a retrieval system or transmitted in any form or by any means, electronic, photocopying, recording or otherwise, without prior written permission being secured.

Requests for permission to reproduce should be addressed to either ISO or the IEEE at the addresses below.

ISO copyright office
Case postale 56 · CH-1211 Geneva 20
Tel. + 41 22 749 01 11
Fax + 41 22 749 09 47
E-mail copyright@iso.org
Web www.iso.org

Institute of Electrical and Electronics Engineers
Standards Association
Manager, Standards Intellectual Property
445 Hoes Lane
P. O. Box 1331
Piscataway, NJ 08854
E-mail: stds.ipr@ieee.org
Web: www.ieee.org

Copyright © 2004 ISO/IEEE. All rights reserved.
Published 15 December 2004. Printed in the United States of America.

IEEE is a registered trademark in the U.S. Patent & Trademark Office, owned by the Institute of Electrical and Electronics Engineers, Incorporated.

Print: ISBN 0-7381-4519-X SH95303
PDF: ISBN 0-7381-4520-3 SS95303

No part of this publication may be reproduced in any form, in an electronic retrieval system or otherwise, without the prior written permission of the publisher.

Copyright © 2004 ISO/IEEE. All rights reserved.

Documents
Document Sharing Hub

Full document details: ISO IEEE 11073-30200-2004

IEEE Standards documents are developed within the IEEE Societies and the Standards Coordinating Committees of the IEEE Standards Association (IEEE-SA) Standards Board. The IEEE develops its standards through a consensus development process, approved by the American National Standards Institute, which brings together volunteers representing varied viewpoints and interests to achieve the final product. Volunteers are not necessarily members of the Institute and serve without compensation. While the IEEE administers the process and establishes rules to promote fairness in the consensus development process, the IEEE does not independently evaluate, test, or verify the accuracy of any of the information contained in its standards.

Use of an IEEE Standard is wholly voluntary. The IEEE disclaims liability for any personal injury, property or other damage, of any nature whatsoever, whether special, indirect, consequential, or compensatory, directly or indirectly resulting from the publication, use of, or reliance upon this, or any other IEEE Standard document.

The IEEE does not warrant or represent the accuracy or content of the material contained herein, and expressly disclaims any express or implied warranty, including any implied warranty of merchantability or fitness for a specific purpose, or that the use of the material contained herein is free from patent infringement. IEEE Standards documents are supplied "**AS IS**."

The existence of an IEEE Standard does not imply that there are no other ways to produce, test, measure, purchase, market, or provide other goods and services related to the scope of the IEEE Standard. Furthermore, the viewpoint expressed at the time a standard is approved and issued is subject to change brought about through developments in the state of the art and comments received from users of the standard. Every IEEE Standard is subjected to review at least every five years for revision or reaffirmation. When a document is more than five years old and has not been reaffirmed, it is reasonable to conclude that its contents, although still of some value, do not wholly reflect the present state of the art. Users are cautioned to check to determine that they have the latest edition of any IEEE Standard.

In publishing and making this document available, the IEEE is not suggesting or rendering professional or other services for, or on behalf of, any person or entity. Nor is the IEEE undertaking to perform any duty owed by any other person or entity to another. Any person utilizing this, and any other IEEE Standards document, should rely upon the advice of a competent professional in determining the exercise of reasonable care in any given circumstances.

Interpretations: Occasionally questions may arise regarding the meaning of portions of standards as they relate to specific applications. When the need for interpretations is brought to the attention of IEEE, the Institute will initiate action to prepare appropriate responses. Since IEEE Standards represent a consensus of concerned interests, it is important to ensure that any interpretation has also received the concurrence of a balance of interests. For this reason, IEEE and the members of its societies and Standards Coordinating Committees are not able to provide an instant response to interpretation requests except in those cases where the matter has previously received formal consideration. At lectures, symposia, seminars, or educational courses, an individual presenting information on IEEE standards shall make it clear that his or her views should be considered the personal views of that individual rather than the formal position, explanation, or interpretation of the IEEE.

Comments for revision of IEEE Standards are welcome from any interested party, regardless of membership affiliation with IEEE. Suggestions for changes in documents should be in the form of a proposed change of text, together with appropriate supporting comments. Comments on standards and requests for interpretations should be addressed to:

Secretary, IEEE-SA Standards Board

445 Hoes Lane

P.O. Box 1331

Piscataway, NJ 08855-1331USA

NOTE — Attention is called to the possibility that implementation of this standard may require use of subject matter covered by patent rights. By publication of this standard, no position is taken with respect to the existence or validity of any patent rights in connection therewith. The IEEE shall not be responsible for identifying patents for which a license may be required by an IEEE standard or for conducting inquiries into the legal validity or scope of those patents that are brought to its attention.

Authorization to photocopy portions of any individual standard for internal or personal use is granted by the Institute of Electrical and Electronics Engineers, Inc., provided that the appropriate fee is paid to Copyright Clearance Center. To arrange for payment of licensing fee, please contact Copyright Clearance Center, Customer Service, 222 Rosewood Drive, Danvers, MA 01923 USA; +1 978 750 8400. Permission to photocopy portions of any individual standard for educational classroom use can also be obtained through the Copyright Clearance Center.

Documents
Document Sharing Hub

Copyright © 2004 ISO/IEEE. All rights reserved.

Full document details: ISO IEEE 11073-30200-2004

Copyright © 2004 ISO/IEEE. All rights reserved.

Documents
Document Sharing Hub
Full document details: ISO IEEE 11073-30200-2004

ISO Foreword

ISO (the International Organization for Standardization) is a worldwide federation of national standards bodies (ISO member bodies). The work of preparing International Standards is normally carried out through ISO technical committees. Each member body interested in a subject for which a technical committee has been established has the right to be represented on that committee. International organizations, governmental and non-governmental, in liaison with ISO, also take part in the work. ISO collaborates closely with the International Electrotechnical Commission (IEC) on all matters of electrotechnical standardization.

Draft International Standards adopted by the technical committees are circulated to the member bodies for voting. Publication as an International Standard requires approval by at least 75% of the member bodies casting a vote.

A pilot project between ISO and the IEEE has been formed to develop and maintain a group of ISO/IEEE standards in the field of medical devices as approved by Council resolution 43/2000. Under this pilot project, IEEE is responsible for the development and maintenance of these standards with participation and input from ISO member bodies.

Attention is drawn to the possibility that some of the elements of this International Standard may be the subject of patent rights. Neither ISO nor the IEEE shall be held responsible for identifying any or all such patent rights.

ISO/IEEE 11073-30200:2004(E) was prepared by IEEE 1073 Committee of the IEEE Engineering in Medicine and Biology Society.

Copyright © 2004 ISO/IEEE. All rights reserved.

Documents
Document Sharing Hub

Full document details: ISO IEEE 11073-30200-2004

IEEE Introduction

This introduction is not part of ISO/IEEE 11073-30200:2004(E), Health informatics — Point-of-care medical device communication — Part 30200: Transport profile — Cable connected.

ISO/IEEE 11073 standards enable communication between medical devices and external computer systems. They provide automatic and detailed electronic data capture of patient vital signs information and device operational data. The primary goals are to:

— Provide real-time plug-and-play interoperability for patient-connected medical devices

— Facilitate the efficient exchange of vital signs and medical device data, acquired at the point-of-care, in all health care environments

"Real-time" means that data from multiple devices can be retrieved, time correlated, and displayed or processed in fractions of a second. "Plug-and-play" means that all the clinician has to do is make the connection — the systems automatically detect, configure, and communicate without any other human interaction.

"Efficient exchange of medical device data" means that information that is captured at the point-of-care (e.g., patient vital signs data) can be archived, retrieved, and processed by many different types of applications without extensive software and equipment support, and without needless loss of information. The standards are especially targeted at acute and continuing care devices, such as patient monitors, ventilators, infusion pumps, ECG devices, etc. They comprise a family of standards that can be layered together to provide connectivity optimized for the specific devices being interfaced.

ISO/IEEE 11073-30200:2004(E) defines a communications transport profile. This profile is for a cable-connected local area network (LAN) for the interconnection of computers and medical devices. This standard is suitable for new device designs, but is particularly targeted to modifications of legacy devices.

The term "legacy devices" refers to equipment that is

— Already in use in clinical facilities
— In active production at the facilities of medical device manufacturers, or
— Beyond the initial stages of engineering development

Specifically, this standard describes connection-oriented communications services and protocols consistent with standards of the Infrared Data Association (IrDA), adapted as appropriate for ISO/IEEE 11073 applications and optimized for use in patient-connected bedside medical devices.

ISO/IEEE 11073-30200:2004(E) is one part of the family of ISO/IEEE 11073 standards. It is compatible with the upper layer ISO/IEEE 11073 standards.

The primary users of this standard are technical personnel who are creating or interfacing with a medical device communications system. Familiarity with the ISO/IEEE 11073 family of standards is recommended. Familiarity with communications and networking technologies is also recommended.

This standard is intended to satisfy the following objectives:

a) Allow compatibility with existing medical device communications designs to minimize design risk, contain product costs, and simplify field upgrades
b) Specify hardware and software elements that are available from multiple vendors
c) Make use of other computer industry communication technology to allow for continuous cost decreases
d) Meet the requirements of IEEE Std 1073™-1996
e) Be compatible with the current published and draft ISO/IEEE standard upper layers

Copyright © 2004 ISO/IEEE. All rights reserved.
Documents
Document Sharing Hub
Full document details: ISO IEEE 11073-30200-2004

Notice to users

Patents

Attention is called to the possibility that implementation of this standard may require use of subject matter covered by patent rights. By publication of this standard, no position is taken with respect to the existence or validity of any patent rights in connection therewith. The IEEE shall not be responsible for identifying patents or patent applications for which a license may be required by to implement an IEEE standard or for conducting inquiries into the legal validity or scope of those patents that are brought to its attention.

Errata

Errata, if any, for this and all other standards can be accessed at the following URL: http://standards.ieee.org/reading/ieee/updates/errata/index.html. Users are encouraged to check this URL for errata periodically.

Interpretations

Current interpretations can be accessed at the following URL: http://standards.ieee.org/reading/ieee/interp/index.html.

Participants

At the time this guide was completed, the Legacy Device Working Group of the IEEE 1073 Committee had the following membership:

Allen Farquhar, *Chair*

Todd Cooper
Kenneth J. Fuchs
Harald Greiner
Kenneth Hall
Dick Myrick
Daniel Nowicki
Paul Schluter
Ward Silver
Lars Steubesand
Jan Wittenber

Other individuals who have contributed to this document include

Frank Enslin
George Kriegl
Tom Luteran
Bob Meijer
Carol Pellegrini

The following members of the balloting committee voted on this standard:

Teresa J. Cendrowska
Allen Farquhar
Ricardo Ruiz Fernandez
Kenneth J. Fuchs
Harald Greiner
Bill Hawley
Debra Herrmann
Robert J. Kennelly
William McMullen
Daniel Nowicki
Melvin Reynolds
M. Michael Shabot
Lars Steubesand

Copyright © 2004 ISO/IEEE. All rights reserved.

Documents
Document Sharing Hub
Full document details: ISO IEEE 11073-30200-2004

When the IEEE-SA Standards Board approved this standard on 30 January 2000, it had the following membership:

Richard J. Holleman, *Chair*
Donald N. Heirman, *Vice Chair*
Judith Gorman, *Secretary*

Satish K. Aggarwal
Dennis Bodson
Mark D. Bowman
James T. Carlo
Gary R. Engmann
Harold E. Epstein
Jay Forster*
Ruben D. Garzon
James H. Gurney
Lowell G. Johnson
Robert J. Kennelly
E. G. "Al" Kiener
Joseph L. Koepfinger*
L. Bruce McClung
Daleep C. Mohla
Robert F. Munzner
Louis-François Pau
Ronald C. Petersen
Gerald H. Peterson
John B. Posey
Gary S. Robinson
Akio Tojo
Hans E. Weinrich
Donald W. Zipse

*Member Emeritus

Also included is the following nonvoting IEEE-SA Standards Board liaison:

Robert E. Hebner

Yvette Ho Sang
Don Messina
IEEE Standards Project Editors

Copyright © 2004 ISO/IEEE. All rights reserved.
Documents
Document Sharing Hub
Full document details: ISO IEEE 11073-30200-2004

CONTENTS

1. Overview ... 1

1.1 Scope ... 2
1.2 Purpose ... 2
1.3 Standards compatibility ... 2
1.4 Audience ... 2

2. References ... 2

3. Definitions, acronyms, and abbreviations ... 4

3.1 Definitions ... 4
3.2 Acronyms and abbreviations ... 6

4. Goals for this standard ... 7

5. Architecture ... 7

5.1 Topology ... 7
5.2 Layering ... 9

6. Physical layer ... 9

7. Data link layer ... 10

7.1 IrLAP frame ... 10
7.2 Procedure model ... 11
7.3 Minimum data link layer requirements ... 12

8. Network layer ... 15

8.1 Discovery information ... 15
8.2 Information access requirements ... 17
8.3 Minimum IrLMP multiplexer requirements ... 19

9. Transport layer ... 20

9.1 Maximum transfer unit ... 20
9.2 Transport service requirements ... 21
9.3 MDDL service ... 22

10. Time synchronization ... 22

11. Labeling and conformance requirements ... 23

11.1 Labeling requirements ... 23
11.2 Conformance requirements ... 23

Annex A (normative) Physical layer ... 24

Annex B (informative) Maximum cable length ... 35

Annex C (informative) Modular connectors ... 37

Copyright © 2004 ISO/IEEE. All rights reserved.

Documents
Document Sharing Hub

Full document details: ISO IEEE 11073-30200-2004

Annex D (informative) RJ-45 to DB-9 modular adapters 39
Annex E (informative) Detailed rationale for pin assignments 40
Annex F (informative) 10BASE-T 41
Annex G (informative) Power delivery considerations 42
Annex H (informative) Nonisolated BCC and DCC design examples 43
Annex I (informative) Isolated BCC design example 45
Annes J (informative) Optical isolator design example 47
Annex K (informative) Marking guidelines 49
Annex L (informative) IrDA message examples 52
Annex M (normative) IrDA profile 58
Annex N (informative) Time synchronization using SNTP 61
Annex O (informative) Bibliography 69

Copyright © 2004 ISO/IEEE. All rights reserved.

Documents
Document Sharing Hub
Full document details: ISO IEEE 11073-30200-2004

Health informatics — Point-of-care medical device communication —

Part 30200:

Transport profile — Cable connected

1. Overview

This standard is divided into 11 clauses, as follows:

— Clause 1 provides an overview of this standard.
— Clause 2 lists references to other standards that are useful in applying this standard.
— Clause 3 provides definitions and abbreviations.
— Clause 4 provides goals for this standard.
— Clause 5 provides an overview of network topology and layering.
— Clause 6 provides a profile of the physical layer.
— Clause 7 provides a profile of the data link layer.
— Clause 8 provides a profile of the network layer.
— Clause 9 provides a profile of the transport layer.
— Clause 10 describes the optional time synchronization service.
— Clause 11 provides labeling and conformance requirements.

This standard also contains 15 annexes, as follows:

— Annex A describes the physical layer.
— Annex B provides information on the maximum cable length.
— Annex C provides examples of physical link media.
— Annex D provides example schematics for modular adapters.
— Annex E provides a detailed rationale for pin assignments.
— Annex F describes the use of 10BASE-T with this standard.
— Annex G provides a discussion of power delivery considerations.
— Annex H provides examples of simple bedside communications controller (BCC) and device communications controller (DCC) designs.
— Annex I provides an example of an isolated BCC design.
— Annex J provides an optical isolator design example.
— Annex K provides marking guidelines.
— Annex L provides protocol examples, particularly of connection establishment.

Documents
Document Sharing Hub

Copyright © 2004 ISO/IEEE. All rights reserved.

Full document details: ISO IEEE 11073-30200-2004

— Annex M defines the Infrared Data Association (IrDA) profile specifications adapted from the IrDA implementation guidelines.
— Annex N provides guidelines for using the SNTP time synchronization protocol.
— Annex O provides bibliographical references.

1.1 Scope

The scope of this standard is an IrDA-based, cable-connected local area network (LAN) for the interconnection of computers and medical devices. This standard is suitable for new device designs, but is particularly targeted to modifications of legacy devices.

The term “legacy devices” refers to equipment that is

— Already in use in clinical facilities
— In active production at the facilities of medical device manufacturers, or
— Beyond the initial stages of engineering development

In each of these cases, the degree of effort to add a standardized communications capability might normally be prohibitive, unless special care is taken in developing a suitable standard.

1.2 Purpose

The purpose of this standard is to provide connection-oriented communications services and protocols consistent with IrDA specifications and adapted as appropriate for ISO/IEEE 11073 applications.

1.3 Standards compatibility

This standard is one part of the family of ISO/IEEE 11073 standards. It is compatible with the ISO/IEEE upper layer standards.

1.4 Audience

The primary users of this standard are technical personnel who are creating or interfacing with a medical device communications system. Familiarity with the ISO/IEEE 11073 family of standards is recommended. Familiarity with communications and networking technologies is also recommended.

2. References

This standard shall be used in conjunction with the following publications. When the following standards are superseded by an approved revision, the revision shall apply.

ANSI/TIA/EIA-232-F-1997, Interface Between Terminal Equipment and Data Circuit-Terminating Equipment Employing Serial Binary Data Interchange.[1]

ANSI/TIA/EIA-561-1990, Simple 8 Position Non-Synchronous Interface Between Data Terminal Equipment and Data Circuit-Terminating Equipment Employing Serial Binary Data Interchange.

[1]ANSI publications are available from the Sales Department, American National Standards Institute, 25 West 43rd Street, 4th Floor, New York, NY 10036, USA (http://www.ansi.org/).

Copyright © 2004 ISO/IEEE. All rights reserved.
Documents
Document Sharing Hub
Full document details: ISO IEEE 11073-30200-2004

ANSI/TIA/EIA-562-1989, Electrical Characteristics for an Unbalanced Digital Interface.

ANSI/TIA/EIA-568-A-1995, Commercial Building Telecommunications Cabling Standard.

IEC 60603-7: 1996, Connectors for Frequencies Below 3 MHz for Use with Printed Circuit Boards—Part 7: Detailed specification for connectors, 8-way, including fixed and free connectors with common mating features, with assessed quality.[2]

IEC 60417-1:1998, Graphical Symbols for Use on Equipment—Part 1: Overview and Application.

IEEE Std 802.3™, IEEE Standard for Local Area Networks—Carrier Sense Multiple Access with Collision Detection (CSMA/CD) Access Method and Physical Layer Specifications.[3, 4]

IEEE Std 1073™-1996, IEEE Standard for Medical Device Communications—Transport Profiles—Overview and Framework.

IEEE Std 1073.3.1™-1994, IEEE Standard for Medical Device Communications—Transport Profile—Connection Mode.[5]

IEEE Std 1073.4.1™-1994, IEEE Standard for Medical Device Communications—Physical Layer Interface—Cable Connected.[6]

IrDA, Link Management Protocol, Version 1.1, Jan. 23, 1996.[7]

IrDA, Serial Infrared Link Access Protocol (IrLAP), Version 1.1, June 16, 1996.

IrDA, Tiny TP: A Flow-Control Mechanism for use with IrLMP, Version 1.1, Oct. 20, 1996.

ISO/IEC 8877:1992(E), Information technology—Telecommunications and information exchange between systems—Interface connector and contact assignments for ISDN Basic Access Interface located at reference points S and T.

RFC-1305, Internet Engineering Task Force, Network Working Group Report, Mar. 1992, “Network Time Protocol Specification, Implementation and Analysis,” Mills, D., University of Delaware.[8, 9]

RFC-2030, Internet Engineering Task Force, Network Working Group Report, Oct. 1996, “Simple Network Time Protocol (SNTP) Version 4 for IPv4, IPv6 and OSI,” Mills, D., University of Delaware.

[2]IEC publications are available from the Sales Department of the International Electrotechnical Commission, Case Postale 131, 3, rue de Varembé, CH-1211, Genève 20, Switzerland/Suisse (http://www.iec.ch/). IEC publications are also available in the United States from the Sales Department, American National Standards Institute, 11 West 42nd Street, 13th Floor, New York, NY 10036, USA.

[3]IEEE publications are available from the Institute of Electrical and Electronics Engineers, 445 Hoes Lane, P.O. Box 1331, Piscataway, NJ 08855-1331, USA (http://www.standards.ieee.org/).

[4]The IEEE standards or products referred to in this clause are trademarks of the Institute of Electrical and Electronics Engineers, Inc.

[5]IEEE Std 1073.3.1-1994 has been withdrawn; however, copies can be obtained from Global Engineering, 15 Inverness Way East, Englewood, CO 80112-5704, USA, tel. (303) 792-2181 (http://global.ihs.com/).

[6]IEEE Std 1073.4.1-1994 has been withdrawn; however, copies can be obtained from Global Engineering, 15 Inverness Way East, Englewood, CO 80112-5704, USA, tel. (303) 792-2181 (http://global.ihs.com/).

[7]IrDA publications are available at http://www.irda.org.

[8]Internet Engineering Task Force publications are available at http://www.ietf.org/.

[9]Information on the Network Time Protocol is available at http://www.eecis.udel.edu/~ntp/.

Copyright © 2004 ISO/IEEE. All rights reserved.

Documents
Document Sharing Hub
Full document details: ISO IEEE 11073-30200-2004

3. Definitions, acronyms, and abbreviations

3.1 Definitions

For the purposes of this standard, the following terms and definitions apply. *The Authoritative Dictionary of IEEE Standards Terms*, Seventh Edition, [B2] should be referenced for terms not defined in this clause.

3.1.1 10BASE-T: IEEE Std 802.3, 1998 Edition, physical layer specification for Ethernet over two pairs of unshielded twisted-pair (UTP) media at 10 Mb/s.

3.1.2 baud: A unit of signaling speed, expressed as the number of times per second the signal can change the electrical state of the transmission line or other medium.

NOTE—Depending on the encoding strategies, a signal event may represent a single bit, more, or less, than one bit.

3.1.3 bedside communications controller (BCC): A communications controller, typically located at a patient bedside, that serves to interface between one or more medical devices. The BCC may be embedded into local display, monitoring, or control equipment. Alternatively, it may be part of a communications router to a remote hospital host computer system.

3.1.4 beginning of frame (BOF): An octet specified by infrared link access protocol (IrLAP).

3.1.5 category 5 (CAT-5) balanced cable: The designation applied to 100 Ω unshielded twisted-pair (UTP) cables and associated connecting hardware whose transmission characteristics are specified up to 100 MHz. (ANSI/TIA/EIA-568-A-1995)

3.1.6 cyclic redundancy check (CRC): The result of a calculation carried out on the octets within an IrLAP frame; also called a frame check sequence. The CRC is appended to the transmitted frame. At the receiver, the calculation creating the CRC may be repeated, and the result compared to that encoded in the signal. *Syn:* **frame check sequence.**

3.1.7 device communications controller (DCC): A communications interface associated with a medical device. A DCC may support one or more physically distinct devices acting as a single network communications unit. Its purpose is to provide a point-to-point serial communication link to a BCC.

3.1.8 electromagnetic compatibility (EMC): The ability of a device, equipment, or system to function satisfactorily in its electromagnetic environment without introducing intolerable electromagnetic disturbances to anything in that environment.

3.1.9 electromagnetic interference (EMI): Signals emanating from external sources (e.g., power supplies, transmitters) or internal sources (e.g., adjacent electronic components, energy sources) that disrupt or prevent operation of electronic systems.

3.1.10 electrostatic discharge (ESD): The sudden transfer of charge between bodies of differing electrostatic potentials that may produce voltages or currents that could destroy or damage electrical components.

3.1.11 frame check sequence: *See:* **cyclic redundancy check.**

3.1.12 high-level data link control (HDLC): A standard protocol defined by ISO for bit-oriented, frame-delimited data communications.

3.1.13 information access service (IAS): A component of infrared link management protocol (IrLMP).

Copyright © 2004 ISO/IEEE. All rights reserved.
Documents
Document Sharing Hub
Full document details: ISO IEEE 11073-30200-2004

3.1.14 local area network (LAN): A communication network to interconnect a variety of intelligent devices (e.g., personal computers, workstations, printers, file storage devices) that can transmit data over a limited area, typically within a facility.

3.1.15 medical information bus (MIB): The informal name for the ISO/IEEE 11073 family of standards.

3.1.16 octet: A group of eight adjacent bits.

3.1.17 primary station: As defined by the infrared link access protocol (IrLAP), the station on the data link that assumes responsibility for the organization of data flow and for unrecoverable data link error conditions. It issues commands to the secondary stations and gives them permission to transmit.

3.1.18 protocol data unit (PDU): Information delivered as a unit between peer entities that contains control information and, optionally, data.

3.1.19 quality of service (QoS): The four negotiated parameters for a link: signaling speed, maximum turn-around time, data size, and disconnect threshold.

3.1.20 radio frequency (RF): (A) (Loosely) The frequency in the portion of the electromagnetic spectrum that is between the audio-frequency portion and the infrared portion. **(B)** A frequency useful for radio transmission.

NOTE—The present practicable limits of radio frequency are roughly 10 kHz to 100 000 MHz. Within this frequency range, electromagnetic radiation may be detected and amplified as an electric current at the wave frequency.[10]

3.1.21 radio frequency interference (RFI): *See:* **radio interference.**

3.1.22 radio interference: Degradation of the reception of a wanted signal caused by radio frequency (RF) disturbance.

NOTES

1—RF disturbance is an electromagnetic disturbance having components in the RF range.

2—The words “interference” and “disturbance” are often used indiscriminately. The expression “radio frequency interference” is also commonly applied to an RF disturbance or an unwanted signal.

3.1.23 RJ-45: (A) AT&T Registered Jack designation for the eight-pin modular connectors that meet the requirements of IEC 60603-7:1996 and ISO/IEC 8877:1992. **(B)** An eight-pin modular telephone plug.

NOTES

1—Also called a programmable connection, an RJ-45 plug is generally used on four-wire circuits, but can be used on eight-wire circuits.

2—Definition (B) reflects colloquial usage. Standards referencing this term should point to the precise standardized connector specification.

3.1.24 RS-232: The serial interface defined in ANSI/TIA/EIA-232-F-1997.

3.1.25 secondary station: As defined by the infrared link access protocol (IrLAP), any station on the data link that does not assume the role of the primary station. It will initiate transmission only as a result of receiving explicit permission to do so from the primary station.

3.1.26 service access point (SAP): An address that identifies a user of the services of a protocol entity.

[10]Notes in text, tables, and figures are given for information only and do not contain requirements needed to implement the standard.

Copyright © 2004 ISO/IEEE. All rights reserved.

Documents
Document Sharing Hub
Full document details: ISO IEEE 11073-30200-2004

3.1.27 service data unit (SDU): Information that is delivered as a unit between peer service access points (SAPs). See: service access point.

3.1.28 set normal response mode (SNRM): A high-level data link control (HDLC) message sent by a bedside communications controller (BCC) to a device communications controller (DCC) when a successful connection to the network has occurred.

3.2 Acronyms and abbreviations

API	application program interface
AWG	American Wire Gage
BCC	bedside communications controller
BOF	beginning of frame
BPWR	bedside communications controller power
CAT-5	category 5
CRC	cyclic redundancy check
CS	connection sense
DCC	device communications controller
DPWR	device communications controller power
DTE	data terminal equipment
DTR	data terminal ready
EMC	electromagnetic compatibility
EMI	electromagnetic interference
EOF	end of frame
ESD	electrostatic discharge
EUI	extended unique identifier
GND	ground
HDLC	high-level data link control
IAS	information access service
IrDA	Infrared Data Association; the set of infrared data communications standards
IrLAP	IrDA link access protocol
IrLMP	IrDA link management protocol
IV	intravenous
LAN	local area network
LED	light-emitting diode
LI	leap indicator
LSAP	link service access point
LSB	least significant bit
MDDL	medical device data language
MIB	medical information bus
MSB	most significant bit
MTU	maximum transfer unit
NIBP	non-invasive blood pressure
NTP	network time protocol
PLL	phase-locked loop
PDU	protocol data unit
QoS	quality of service
RAC	IEEE Registration Authority Committee
RD	receive data
RF	radio frequency
RFI	radio frequency interference
RJ	registered jack
RR	receive ready
RTS	request to send

Copyright © 2004 ISO/IEEE. All rights reserved.
Documents
Document Sharing Hub
Full document details: ISO IEEE 11073-30200-2004

RxD	receive data
SAP	service access point
SAR	segmentation and reassembly
SDLC	synchronous data link control
SDU	service data unit
SNRM	set normal response mode
SNTP	simple network time protocol
TD	transmit data
TinyTP	tiny transport protocol
TTPSAP	TinyTP service access point
TxD	transmit data
UTC	coordinated universal time
UTP	unshielded twisted pair
XID	exchange station identification
XMIT	transmitting
VN	version number

4. Goals for this standard

The following are the main goals for this standard:

a) The standard shall allow the use of existing RS-232 port designs to minimize design risk, contain product costs, and simplify field upgrades.

b) The standard shall specify hardware and software elements that are available from multiple vendors.

c) The standard should make use of other computer industry communication technology to allow for continuous cost decreases.

d) The standard should meet the requirements of IEEE Std 1073-1996.

e) The standard should be compatible with the current published and draft IEEE/ANSI standard upper layers.

5. Architecture

This clause is intended to define ISO/IEEE 11073-30200 network topology and protocol layering.

5.1 Topology

The ISO/IEEE 11073-30200 network defines a star topology, requiring each device to have its own connection directly into the network. On the communications network, two types of communications nodes are allowed:

a) The BCC is the primary node and functions as the network controller and the hub of the star.

b) DCCs are secondary nodes and limited in number to the loading capacity of the BCC and/or number of physical port sockets.

The devices connect to the network through the DCC. The BCC can interface directly to a local host computer, as in Figure 1, or to a remote host computer over a network, as in Figure 2. The portion of the BCC performing ISO/IEEE 11073-30200 operations would be the same in both configurations. However, the BCC would also include internet-working functions in the latter case.

Copyright © 2004 ISO/IEEE. All rights reserved.

Documents
Document Sharing Hub
Full document details: ISO IEEE 11073-30200-2004

Unless otherwise noted, all references to a BCC in this standard refer only to the components performing ISO/IEEE 11073-30200 functions, as indicated in Figure 1 and Figure 2.

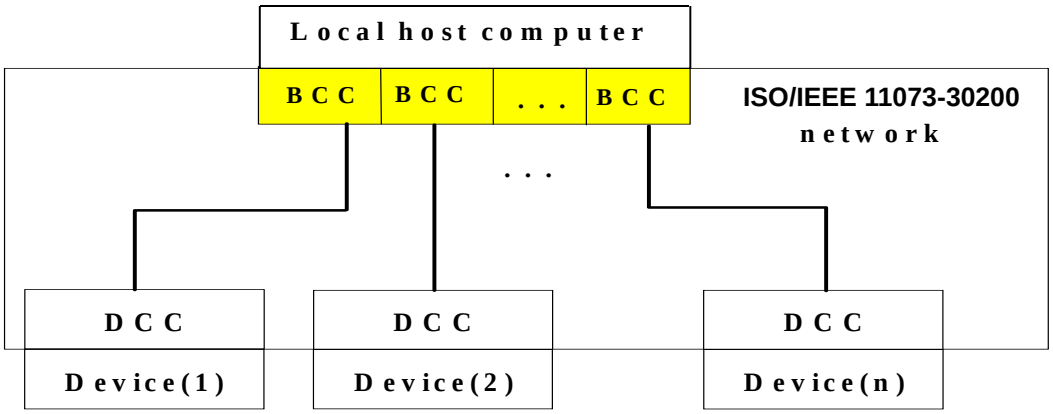

Figure 1—Connection topology with a local host

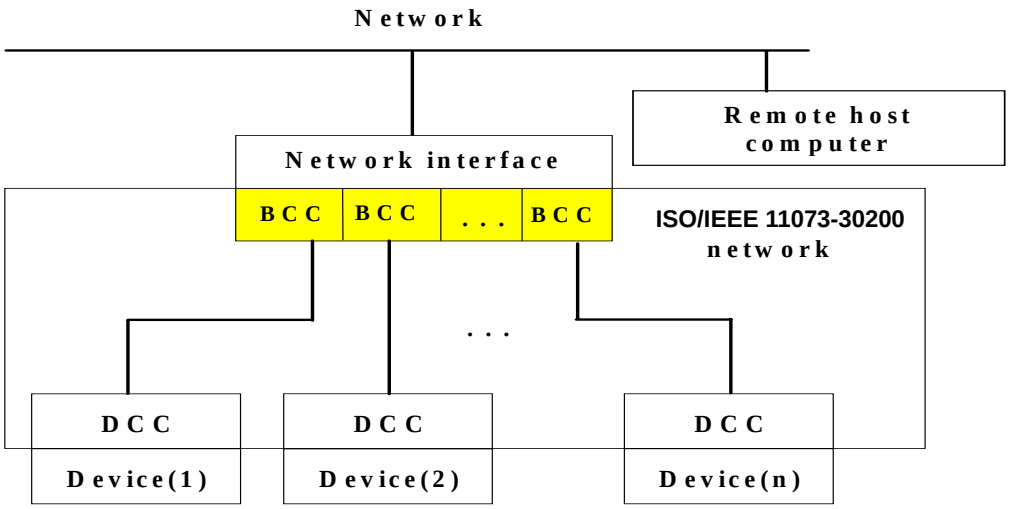

Figure 2—Connection topology with a remote host

The cable-connected network described by this standard consists of individual point-to-point connections between the BCC and each DCC: it is not a multidrop network. Only a single DCC is supported on each physical port connection.

Copyright © 2004 ISO/IEEE. All rights reserved.
Documents
Document Sharing Hub
Full document details: ISO IEEE 11073-30200-2004

5.2 Layering

Layering is consistent with the IrDA standards, as shown in Figure 3.

Briefly, the components of the stack are as follows.

a) Physical layer, defining a standard connector and electrical characteristics (see Clause 6)

b) Infrared link access protocol (IrLAP), providing a device-to-host connection for the reliable, ordered transfer of data, including device discovery procedures (see Clause 7)

c) Infrared link management protocol (IrLMP), providing multiplexing of the IrLAP layer (see Clause 8)

d) Tiny transport protocol (TinyTP), providing flow control on IrLMP connections (see Clause 9)

e) Simple network time protocol (SNTP) service access point (SAP), a SAP for an optional time synchronization service (see Clause 10)

f) Medical device data languages (MDDL) SAP, as described in other ISO/IEEE 11073 standards

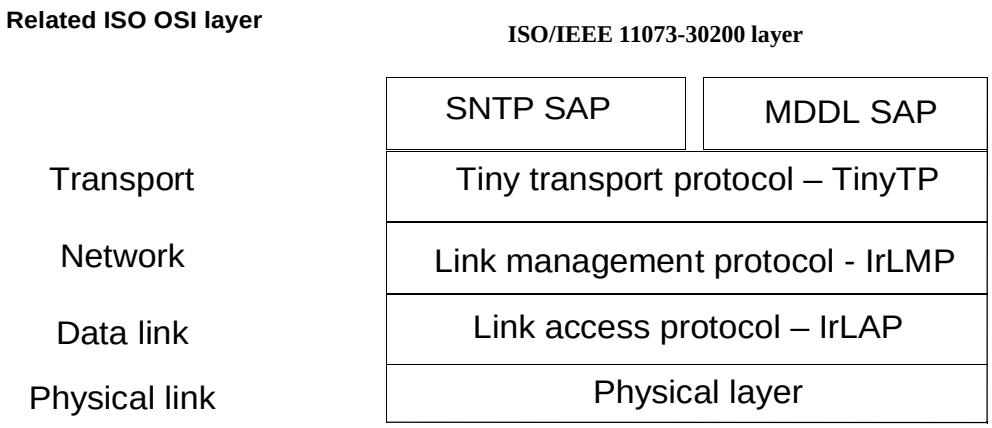

Figure 3—ISO/IEEE 11073-30200 layering

Service primitives are specified for some of the layers. This definition of service does not imply any specific interface implementation. These primitives do not constitute an application program interface (API). Conformance to this standard is judged by performance at the communications port only.

6. Physical layer

The physical layer provides point-to-point connection sensing, data transmission and power delivery between the BCC and DCC using an eight-pin RJ-45 modular connector. The physical layer requirements are defined in Annex A.

Refer to the following additional informative annexes for more information about the physical layer:

— Annex B provides information on the maximum cable length.
— Annex C provides examples of physical link media.
— Annex D provides example schematics for modular adapters.

Copyright © 2004 ISO/IEEE. All rights reserved.

Documents
Document Sharing Hub
Full document details: ISO IEEE 11073-30200-2004

— Annex E provides a detailed rationale for pin assignments.
— Annex F describes the use of 10BASE-T with this standard.
— Annex G provides a discussion of power delivery considerations.
— Annex H provides examples of simple BCC and DCC designs.
— Annex I provides an example of an isolated BCC design.
— Annex J provides an optical isolator design example.
— Annex K provides marking guidelines.

7. Data link layer

The data link layer is adopted from the IrLAP, which implements ISO/OSI layer 2, the data link layer. It is based on standard asynchronous high-level data link control (HDLC) and synchronous data link control (SDLC) half-duplex protocols.

IrLAP provides the following features:

a) Dynamic address and address conflict resolution

b) Error recovery mechanism

c) Station discovery and identification procedure

d) Connectionless and connection-oriented services

e) Negotiation of connection characteristics

This standard follows some of the recommendations of IrDA Lite [B4] for IrLAP. IrLAP capabilities not specified here are out of scope for an ISO/IEEE 11073-30200 interface. Examples of these capabilities are sniffing, connectionless data transfer, test frames, role exchange, and 2400 Bd operation.

IrLAP communication partners act in one of two roles: one primary station and one or more secondary stations. The primary station discovers all available secondary stations and establishes a connection to specific stations. The primary station is always the initiator of data transfer; the secondary station reacts to commands from the primary.

As shown in Figure 4, a BCC performs the functions of a primary station, and a DCC performs the functions of a secondary station. Although IrLAP supports multidrop communications in the infrared medium, this standard defines a single DCC at each cable-connected port on the BCC. Each port on a BCC represents a separate instance of the transport profile stack.

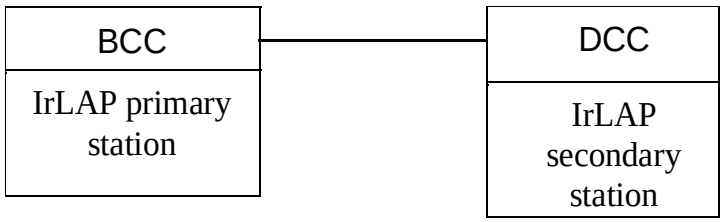

Figure 4—Logical network model

7.1 IrLAP frame

IrLAP defines a physical layer frame wrapper and a data link frame. The physical layer uses the ASYNC frame wrapper. The ASYNC frame wrapper has beginning frame (BOF), ending frame (EOF), and field

Copyright © 2004 ISO/IEEE. All rights reserved.
Documents Document Sharing Hub
Full document details: ISO IEEE 11073-30200-2004

check sequence fields. This frame encloses the data link frame, shown in Figure 5. IrLAP defines a transparency algorithm that allows the use of the framing characters (BOF and EOF) inside the data frame.

Figure 5—IrLAP frame

7.2 Procedure model

The simplified procedure model in Figure 6 illustrates the different procedures within an IrDA communication.

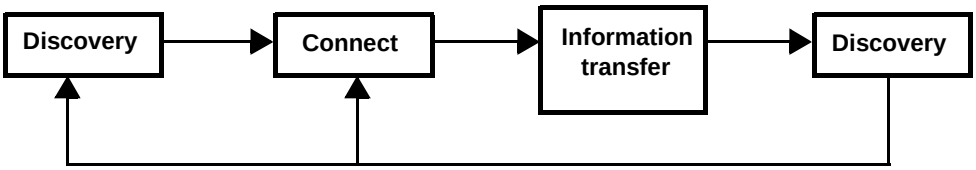

Figure 6— IrDA communication procedure model

7.2.1 Discovery

A primary station (the initiator) performs a discovery procedure to detect all available secondary devices. The secondary device (the responder) responds with address information and minimal device information (service hints and a device nickname). The discovery phase is done with a fixed set of communication parameters (e.g., 9600 Bd).

Discovery begins when the initiator broadcasts a discovery command frame. This command frame specifies the number of time slots for the discovery process—more time slots means more devices can be discovered and reduces the likelihood of collisions between responders during discovery.

Because this standard specifies a cable-connected topology, there is a maximum of one responder at each BCC port. In order to minimize the time spent during discovery, the BCC should provide only a single time slot for this procedure.

7.2.2 Negotiation and connection

The primary station establishes a connection by negotiating the maximum communication capabilities (e.g., signaling speed, data size, window size) supported by both devices. In the case of the BCC, this quality of service (QoS) may be constrained by available system bandwidth and the bandwidth requirements at other ports on the BCC.

After acknowledgement from the secondary station, both stations switch to the new communication parameters.

Copyright © 2004 ISO/IEEE. All rights reserved.

Documents
Document Sharing Hub
Full document details: ISO IEEE 11073-30200-2004

7.2.3 Information transfer

The primary station periodically polls the secondary station for data or status information. The stations communicate using a reliable data transport service. Stations may also use an unreliable expedited data transport service for time synchronization.

7.2.4 Disconnect

Both stations, primary or secondary, can normally disconnect the connection. In addition, timeout mechanisms on both sides detect a broken or aborted connection. All communication parameters are reset to negotiation values upon disconnect.

7.3 Minimum data link layer requirements

The minimum data link layer services support the capabilities of device discovery, connection, data transfer, and disconnection.

7.3.1 Minimum data link layer services

The status of the data link layer service primitives provided by a BCC or DCC is specified in Table 1 as follows:

M: Mandatory
C: Conditional

Table 1—Data link layer service requirements

Service primitives	Status	
	BCC	DCC
Device discovery		
IrLAP_Discovery.request(gen addr bit)	M	N/A
IrLAP_Discovery.confirm(list of discovery logs)	M	N/A
IrLAP_Discovery.indication(discovery log)	N/A	M
Connection		
IrLAP_Connect.request(target device address, requested QoS, sniff [a])	M	C[b]
IrLAP_Connect.confirm(connection handle, returned QoS)	M	C[b]

Copyright © 2004 ISO/IEEE. All rights reserved.
Documents Document Sharing Hub
Full document details: ISO IEEE 11073-30200-2004

Table 1—Data link layer service requirements *(continued)*

IrLAP_Connect.indication(source device addr, connection handle, returned QoS)	C[b]	M
IrLAP_Connect.response(source device addr, connection handle, requested QoS)	C[b]	M
Data transfer		
IrLAP_Data.request(connection handle, user data, expedited unreliable flag = false)	M	M
IrLAP_Data.indication(connection handle, user data, expedited unreliable flag = false)	M	M
IrLAP_Data.request(connection handle, user data, expedited unreliable flag = true)	C[c]	C[c]
IrLAP_Data.indication(connection handle, user data, expedited unreliable flag = true)	C[c]	C[c]
Disconnection		
IrLAP_Disconnect.request(connection handle)	M	M
IrLAP_Disconnect.indication(connection handle, unacked data)	M	M

[a]Use of the sniffing feature is out of the scope of this standard.
[b]Indicated connect services are required in a BCC or DCC that supports SNTP.
[c]The expedited unreliable IrLAP_Data services are required for the LM_UData/TTP_UData service in a BCC or DCC that supports SNTP.

7.3.2 Wrapping layer

Asynchronous framing and transparency shall be used, as defined by IrLAP.

7.3.3 Negotiation

At a minimum, the IrLAP negotiation parameters in Table 2 shall be supported.

Table 2—IrLAP minimum negotiation parameters

Signaling speed	9600 Bd
Maximum turnaround time	500 ms
Data size[a]	64 octets
Window size	1 frame window
Additional BOFs	0 BOFs
Link disconnect time	3 s
Link threshold time	0 s

[a]The data size parameter is the maximum number of data octets allowed in any received frame. A data size parameter of 64 octets is required for negotiation. A larger data size may also be required to support the range of transfer protocol data unit (PDU) sizes provided by this profile.

7.3.4 Link disconnect time

IrLAP supports the negotiation of the link disconnect time, i.e., the time a station will wait without receiving valid frames before it disconnects the link. IrLAP stations may support a variety of link disconnect times,

Copyright © 2004 ISO/IEEE. All rights reserved.

Documents
Document Sharing Hub
Full document details: ISO IEEE 11073-30200-2004