PUBLICLY AVAILABLE SPECIFICATION

ISO/PAS 3930

First edition
2009-12-15

Instruments for measuring vehicle exhaust emissions — Metrological and technical requirements; Metrological control and performance tests

Instruments de mesure des gaz d'échappement des véhicules — Exigences métrologiques et techniques; Contrôles métrologiques et essais de performances

Reference number
ISO/PAS 3930:2009(E)

Documents
Document Sharing Hub
© ISO 2009

Full document details: ISO PAS 03930-2009

PDF disclaimer

This PDF file may contain embedded typefaces. In accordance with Adobe's licensing policy, this file may be printed or viewed but shall not be edited unless the typefaces which are embedded are licensed to and installed on the computer performing the editing. In downloading this file, parties accept therein the responsibility of not infringing Adobe's licensing policy. The ISO Central Secretariat accepts no liability in this area.

Adobe is a trademark of Adobe Systems Incorporated.

Details of the software products used to create this PDF file can be found in the General Info relative to the file; the PDF-creation parameters were optimized for printing. Every care has been taken to ensure that the file is suitable for use by ISO member bodies. In the unlikely event that a problem relating to it is found, please inform the Central Secretariat at the address given below.

COPYRIGHT PROTECTED DOCUMENT

© ISO 2009

All rights reserved. Unless otherwise specified, no part of this publication may be reproduced or utilized in any form or by any means, electronic or mechanical, including photocopying and microfilm, without permission in writing from either ISO at the address below or ISO's member body in the country of the requester.

ISO copyright office
Case postale 56 • CH-1211 Geneva 20
Tel. + 41 22 749 01 11
Fax + 41 22 749 09 47
E-mail copyright@iso.org
Web www.iso.org

English version published by ISO in 2010

Published in Switzerland

© ISO 2009 – All rights reserved

Documents
Document Sharing Hub

Full document details: ISO PAS 03930-2009

Contents

Page

Foreword iv

1 Scope 1
2 Normative references 2
3 Terms and definitions 4
4 Description of the instrument 9
5 Metrological requirements 11
6 Technical requirements 16
7 Inscriptions and operating instructions 20
8 Metrological controls 22
9 Performance tests for type approval 24

Annex A Description of performance tests for type approval 27

Annex B Designation of reference gases and their composition 38

Annex C Procedure for routine testing 41

Annex D Lambda calculation 42

© ISO 2009 – All rights reserved

Documents
Document Sharing Hub
Full document details: ISO PAS 03930-2009

Foreword

ISO (the International Organization for Standardization) is a worldwide federation of national standards bodies (ISO member bodies). The work of preparing International Standards is normally carried out through ISO technical committees. Each member body interested in a subject for which a technical committee has been established has the right to be represented on that committee. International organizations, governmental and non-governmental, in liaison with ISO, also take part in the work. ISO collaborates closely with the International Electrotechnical Commission (IEC) on all matters of electrotechnical standardization.

The main task of technical committees is to prepare International Standards. Draft International Standards adopted by the technical committees are circulated to the member bodies for voting. Publication as an International Standard requires approval by at least 75 % of the member bodies casting a vote.

In other circumstances, particularly when there is an urgent market requirement for such documents, a technical committee may decide to publish other types of normative document:

— an ISO Publicly Available Specification (ISO/PAS) represents an agreement between technical experts in an ISO working group and is accepted for publication if it is approved by more than 50 % of the members of the parent committee casting a vote;

— an ISO Technical Specification (ISO/TS) represents an agreement between the members of a technical committee and is accepted for publication if it is approved by 2/3 of the members of the committee casting a vote.

An ISO/PAS or ISO/TS is reviewed after three years in order to decide whether it will be confirmed for a further three years, revised to become an International Standard, or withdrawn. If the ISO/PAS or ISO/TS is confirmed, it is reviewed again after a further three years, at which time it must either be transformed into an International Standard or be withdrawn.

ISO/PAS 3930 was prepared jointly by Technical Committee ISO/TC 22, *Road vehicles*, Subcommittee SC 5, *Engine tests* and the International Organization of Legal Metrology (OIML) Technical Committee TC 16/SC 1, *Air pollution*.

This first edition of ISO/PAS 3930 cancels and replaces ISO 3930:2000, which has been technically revised. It also incorporates the Amendment ISO 3930:2000/Amd.1:2004.

The following main changes have been made to ISO 3930:2000:

— Class II and analog instruments are no longer addressed: for instruments which are still in use, national authorities can decide on national transitional arrangements for Class II and/or analog instruments, based on ISO 3930:2000;

— an accuracy Class 00 has been added, defining more stringent accuracy requirements for CO, CO_2 and HC;

— requirements and tests relating to electromagnetic compatibility (EMC) have been added/updated, taking into account the revisions of the appropriate ISO and IEC standards;

— requirements have been added for means of durable recording, such as printing devices, for software and for instruments powered by a battery.

With the exception of the Scope and the presentation, which has been adapted, the technical content of ISO/PAS 3930 is identical to that of International Recommendation OIML R 99-1 & 2:2008.

NOTE With the exception of the Scope, the designation “this Recommendation” is used throughout the text in place of “this Publicly Available Specification”.

Documents
Document Sharing Hub

© ISO 2009 – All rights reserved

Full document details: ISO PAS 03930-2009

Instruments for measuring vehicle exhaust emissions — Metrological and technical requirements; Metrological control and performance tests

1 Scope

This Publicly Available Specification specifies the metrological and technical requirements and tests for digital measuring instruments that serve to determine the volume fractions of certain components of the exhaust gases emanating from motor vehicles. The conditions with which such instruments shall comply in order to meet any OIML performance requirements are also established.

This Publicly Available Specification is applicable to instruments, particularly those used according to the procedure defined in ISO 3929, intended for the inspection and maintenance of in-use motor vehicles with spark ignition engines. These instruments are used to determine the volume fraction of one or more of the following exhaust gas components:

— carbon monoxide (CO),

— carbon dioxide (CO_2),

— hydrocarbons (HC, in terms of n-hexane), and

— oxygen (O_2)

at the moisture level of the sample as analysed.

In addition to the measurement of these components, this Publicly Available Specification specifies the lambda calculation for the instruments provided with a facility to determine the value of air/fuel ratio in the exhaust gases.

This Publicly Available Specification applies to instruments whose principle of detection is based on infrared absorption in gases for CO, CO_2 and HC. Oxygen is generally measured with a fuel cell.

This Publicly Available Specification does not exclude any other types of instruments that, although based on other principles of detection, meet the specified metrological and technical requirements and satisfy the associated tests.

This Publicly Available Specification defines three accuracy classes of the instruments: Class 00, Class 0 and Class I.

This Publicly Available Specification does not apply to equipment for on-board diagnostics incorporated in motor vehicles.

© ISO 2009 – All rights reserved

Documents
Document Sharing Hub
Full document details: ISO PAS 03930-2009

2 Normative references

The following normative documents contain provisions which, through reference in this text, constitute provisions of this Recommendation.

Subsequent amendments to, or revisions of, dated references do not apply. However, parties to agreements based on this Recommendation are encouraged to investigate the possibility of applying the most recent editions of the normative documents indicated below. For undated references, the latest edition of the normative document referred to applies.

Members of ISO, IEC, and the OIML maintain registers of currently valid International Standards. The actual status of the Standards referred to can also be found on the Internet:

— IEC Publications: http://www.iec.ch

— ISO Publications: http://www.iso.org

— OIML Publications: http://www.oiml.org (with free download of PDF files).

2.1 ISO Standards

ISO 3929 (2003), *Road vehicles — Measurement methods for exhaust gas emissions during inspection or maintenance*

ISO 6142 (2001), *Gas analysis — Preparation of calibration gas mixtures — Gravimetric method*

ISO 6145 (all parts), *Gas analysis — Preparation of calibration gas mixtures using dynamic volumetric methods*

ISO 7504 (2001), *Gas analysis — Vocabulary*

ISO 7637-1 (2002), *Road vehicles — Electrical disturbance from conduction and coupling — Part 1: Definitions and general considerations*

ISO 7637-2 (2004), *Road vehicles — Electrical disturbance from conduction and coupling — Part 2: Electrical transient conduction along supply lines only*

ISO 7637-3 (1995) with correction 1 (1995), *Road vehicles — Electrical disturbance by conduction and coupling — Part 3: Vehicles with nominal 12 V or 24 V supply voltage — Electrical transient transmission by capacitive and inductive coupling via lines other than supply lines*

ISO 14912 (2003) with correction 1 (2006), *Gas analysis — Conversion of gas mixture composition data*

© ISO 2009 – All rights reserved
Documents
Document Sharing Hub
Full document details: ISO PAS 03930-2009

2.2 IEC Standards

IEC 60068-2-1 (1990), *Environmental testing — Part 2: Tests — Test A: Cold,* with Amendments 1 (1993) and 2 (1994)

IEC 60068-2-2 (1974), *Environmental testing — Part 2: Tests — Test B: Dry heat, w*ith Amendments 1 (1993) and 2 (1994)

IEC 60068-2-78 (2001), *Environmental testing — Part 2: Tests — Test Cab: Damp heat, steady state*

IEC 60068-2-31 (1969), *Environmental testing — Part 2: Tests — Test Ec: Drop and topple, primarily for equipment type specimens,* with Amendment 1 (1982)

IEC 60068-2-64 (1993), *Environmental testing — Part 2: Test methods — Test Fh: Vibration, broad band random (digital control) and guidance,* with Correction 1 (1993)

IEC 60068-3-1 (1974), *Environmental testing — Part 3: Background information — Section 1: Cold and dry heat tests,* with Supplement 1 (1978)

IEC 60068-3-4 (2001), *Environmental testing — Part 3-4: Supporting documentation and guidance — Damp heat tests*

IEC/TR 61000-2-1 (1990-05), *Electromagnetic compatibility (EMC) — Part 2: Environment — Section 1: Description of the environment — Electromagnetic environment for low-frequency conducted disturbances and signalling in public power supply systems*

IEC 61000-4-2 (1995), *Electromagnetic compatibility (EMC) — Part 4: Testing and measurement techniques — Section 2: Electrostatic discharge immunity test,* with Amendments 1 (1998) and 2 (2000) — (Consolidated edition 2001)

IEC 61000-4-3 (2006), *Electromagnetic compatibility (EMC) — Part 4: Testing and measurement techniques — Section 3: Radiated, radio-frequency, electromagnetic field immunity test*

IEC 61000-4-4 (2004), *Electromagnetic compatibility (EMC) — Part 4: Testing and measurement techniques — Section 4: Electrical fast transient/burst immunity test*

IEC 61000-4-5 (2005), *Electromagnetic compatibility (EMC) — Part 4: Testing and measurement techniques — Section 5: Surge immunity test*

IEC 61000-4-6 (2003), *Electromagnetic compatibility (EMC) — Part 4: Testing and measurement techniques — Section 6: Immunity to conducted disturbances, induced by radio-frequency fields,* with Amendment 1 (2004) and Amendment 2 (2006) — (Consolidated edition 2006)

IEC 61000-4-8 (1993), *Electromagnetic compatibility (EMC) — Part 4: Testing and measurement techniques — Section 8: Power frequency magnetic field immunity test,* with Amendment 1 (2000) — (Consolidated edition 2001)

© ISO 2009 – All rights reserved

Documents
Document Sharing Hub
Full document details: ISO PAS 03930-2009

2.3 OIML Publications

OIML V 1 (2000), *International Vocabulary of Terms in Legal Metrology (VIML)*

OIML D 11 (2004), *General requirements for electronic measuring instruments*

2.4 Other Publications

International Vocabulary of Metrology — Basic and general concepts and associated terms (VIM), Third edition (2007/2008): Joint publication by the BIPM, IEC, IFCC, ISO, IUPAC, IUPAP, and OIML.

Guide to the expression of uncertainty in measurement (GUM), (1995): Joint publication by the BIPM, IEC, IFCC, ISO, IUPAC, IUPAP, and OIML

3 Terms and definitions

For the purposes of this Recommendation, the following terms and definitions apply.

3.1
sampling probe
tube that is introduced into the exhaust tail pipe of a vehicle to take gas samples

3.2
water separator
device that removes water from the exhaust gas sample to a level that prevents condensation within the gas handling system downstream from its location

3.3
filter unit
device that removes particles from the exhaust gas sample

3.4
gas handling system
all instrument components, from the sampling probe to the gas sample outlet, through which the exhaust gas sample is conveyed by the pump

3.5
adjustment (of a measuring instrument)
set of operations carried out on a measuring system so that it provides prescribed indications corresponding to given values of a quantity to be measured

[VIM:2007, 3.11]

3.6
user adjustment (of a measuring instrument)
adjustment employing only the means at the disposal of the user

3.7
manual adjustment facility
facility allowing the adjustment of the instrument by the user

3.8
semi-automatic adjustment facility
facility allowing the user to initiate an adjustment of the instrument without having the possibility of influencing its magnitude, whether or not the adjustment is automatically required

NOTE For those instruments that require the values of the volume fractions of the reference gas to be entered manually, the facility is considered to be semi-automatic.

© ISO 2009 – All rights reserved
Documents
Document Sharing Hub
Full document details: ISO PAS 03930-2009

3.9
automatic adjustment facility
facility performing the adjustment of the instrument as programmed without the intervention of the user, to initiate the adjustment or its magnitude

3.10
zero-setting facility
facility to set the indication of the instrument to zero

3.11
reference gas adjustment facility
facility to adjust the instrument to the value of a reference gas

3.12
internal adjustment facility
facility to adjust the instrument to a designated value without the use of an external reference gas

3.13
warm-up time
elapsed time between the moment power is applied to an instrument and the moment at which the instrument is capable of complying with the metrological requirements

3.14
step response time
duration between the instant when an input quantity value of a measuring instrument or measuring system is subjected to an abrupt change between two specified constant quantity values and the instant when a corresponding indication settles within specified limits around its final steady value (referred to as “response time” in this Recommendation)

[VIM:2007, 4.23]

3.15
conventional true quantity value
quantity value attributed by agreement to a quantity for a given purpose

[VIM:2007, 2.12]

3.16
reference (quantity) value
quantity value used as a basis for comparison with values of quantities of the same kind

[VIM:2007, 5.18]

3.17
error (of measurement)
measured quantity value minus a reference quantity value

[VIM:2007, 2.16]

3.18
intrinsic error
error of a measuring instrument determined under reference conditions

3.19
relative error
error of measurement divided by the conventional true quantity value of the measurand

3.20
fault
difference between the error of indication and the intrinsic error of the instrument

[OIML D 11:2004, 3.9]

© ISO 2009 – All rights reserved

Documents
Document Sharing Hub
Full document details: ISO PAS 03930-2009

3.21
significant fault
fault which has a magnitude greater than the magnitude of the maximum permissible error on initial verification

NOTE 1 The following faults are considered to be not significant:

a) Fault arising from simultaneous and mutually independent causes in the instrument itself or in its checking facilities;

b) Faults implying the impossibility to perform any measurement;

c) Transitory faults being momentary variations in the indication, which cannot be interpreted, recorded or transmitted as a measurement result; and

d) Faults giving rise to variations in the measurement results that are so large as to be noticed by all those interested in the measurement result.

NOTE 2 Adapted from OIML D 11:2004, 3.10.

3.22
expanded (measurement) uncertainty
product of a combined standard measurement uncertainty and a factor larger than the number one

[VIM:2007, 2.35]

3.23
coverage factor
number larger than one by which a combined standard measurement uncertainty is multiplied to obtain an expanded measurement uncertainty

[VIM:2007, 2.38]

NOTE A coverage factor is usually symbolized by the letter k (see also GUM, 2.3.6).

3.24
influence quantity
quantity that, in a direct measurement, does not affect the quantity that is actually measured, but affects the relation between the indication and the measurement result

[VIM:2007, 2.52]

3.25
rated operating conditions
operating condition that must be fulfilled during measurement in order that a measuring instrument or measuring system perform as designed

[VIM:2007, 4.9]

3.26
influence factor
influence quantity having a value within the rated operating conditions of the instrument

NOTE Adapted from OIML D 11:2004, 3.13.1.

3.27
disturbance
influence quantity having a value within the limits specified in this Recommendation but outside the rated operating conditions of the instrument

NOTE Adapted from OIML D 11:2004, 3.13.2.

3.28
reference condition
operating condition prescribed for evaluating the performance of a measuring instrument or measuring system or for comparison of measurement results

[VIM:2007, 4.11]

© ISO 2009 – All rights reserved
Documents
Document Sharing Hub
Full document details: ISO PAS 03930-2009

3.29
checking facility
facility that is incorporated in the instrument and that enables significant faults to be detected and acted upon

NOTE 1 "Acted upon" means any adequate response by the instrument (luminous or acoustic signal, blocking of process, etc.).

NOTE 2 Adapted from OIML D 11:2004, 3.18.

3.30
automatic checking facility
checking facility operating without the intervention of the user

NOTE Adapted from OIML D 11:2004, 3.18.1.

3.30.1
permanent automatic checking facility (type P)
automatic checking facility operating during each measurement cycle

NOTE Adapted from OIML D 11:2004, 3.18.1.1.

3.30.2
intermittent automatic checking facility (type I)
automatic checking facility operating at certain time intervals or per fixed number of measurement cycles

NOTE Adapted from OIML D 11:2004, 3.18.1.2.

3.31
legally relevant software
any part of the software, including stored parameters, which has an influence on the calculated, displayed, transmitted, or stored measurement result.

3.32
test
series of operations intended to verify the compliance of the equipment under test (EUT) with specified requirements

[OIML D 11:2004, 3.20]

3.33
lambda
dimensionless value representative of the burning efficiency of an engine in terms of the air/fuel ratio in the exhaust gases and determined with a referenced standardized formula

3.34
reference gas
gas mixture of sufficient stability and homogeneity whose composition is properly established for use in various performance tests

NOTE 1 Adapted from ISO 7504, 4.1 (calibration gas mixture) and 4.1.1 (reference gas mixture) and VIM, 5.13 (reference material) and 5.14 (certified reference material).

NOTE 2 In the referent ISO Standards, the expression "calibration gas" is generally used.

NOTE 3 See also Annex B.

3.35
modulus (of a number) absolute value
value of the number without regard to its sign

© ISO 2009 – All rights reserved

Documents
Document Sharing Hub
Full document details: ISO PAS 03930-2009

3.36
hand-held instrument
type of instrument that is designed for hand-held transportation with its standard accessories by one person, and that rests on a suitable surface during use

3.37
mains power
primary external source of electrical power for the instrument, including all subassemblies [examples: public power network (AC or DC), generator, external battery or other DC supply systems]

NOTE Adapted from OIML D 11:2004, 3.21.

3.38
power converter (power supply device)
subassembly converting the voltage from the mains power to a voltage suitable for other subassemblies

[OIML D 11:2004, 3.22]

3.39
back-up battery
battery that is intended to power specific functions of an instrument in the absence of the primary power supply (for example: to preserve stored data)

[OIML D 11:2004, 3.24]

3.40
motor vehicle
road vehicle, powered by a built-in engine, which is not rail borne, and which is normally used for applications such as:

— carrying persons and/or goods;

— towing vehicles used for the carriage of persons and/or goods.

3.41 Abbreviations

AC Alternating Current

AM Amplitude Modulation

ASD Acceleration Spectral Density

DC Direct Current

EM Electro Magnetic

EMC Electro Magnetic Compatibility

e.m.f. electromotive force

ESD Electrostatic Discharge

EUT Equipment Under Test

IEC International Electrotechnical Commission

ISO International Organization for Standardization

N.A. Not Applicable

OIML International Organization of Legal Metrology

PEF Propane/hexane Equivalency Factor

RMS Root Mean Square

© ISO 2009 – All rights reserved
Documents
Document Sharing Hub
Full document details: ISO PAS 03930-2009

4 Description of the instrument

4.1 Generally, the instrument provides a means for sampling and then measuring the exhaust gases emitted from the tail pipe of a motor vehicle. A pump provides the means for conveying the gas sample through a gas handling system. One or more detection devices, incorporated in the gas handling system, analyze the sample and provide signals related to the volume fractions of gas components of interest, namely CO, CO_2, HC and O_2. The detector signals are then electrically processed to display and possibly record the results of a measurement in volume fractions of the gas components together with other important related information such as a lambda value calculation.

4.2 Acceptable overall performance of the instrument is dependent upon its various components for the associated characteristics. An example of an instrument using a reference gas for adjustment is shown in Figure 1.

4.3 The major instrument components are as follows:

- a sampling probe introduced in the tail pipe of an operating motor vehicle to collect the exhaust gas sample;
- a hose with associated tubing connected to the probe to provide a path for the gas sample to enter, pass through and exit the instrument;
- a pump to convey the gases through the instrument;
- a water separator to prevent water condensation from forming in the instrument;
- a filter to remove particles that could cause contamination of various sensitive parts of the instrument;
- ports downstream from the water separator and filter to introduce ambient air and reference gas when required by the technology used;
- detection devices to measure the volume fractions of the gas sample;
- a data system to process the signal including an indicating device to display the results of a measurement; and
- a control facility to initiate and check instrument operations and a manual, semi-automatic, or automatic adjustment facility to set instrument operating parameters within prescribed limits.

4.4 The instrument can be provided with ancillary devices for measuring the oil temperature and/or the engine speed. This Recommendation, however, does not apply to these devices.

© ISO 2009 – All rights reserved

Documents
Document Sharing Hub
Full document details: ISO PAS 03930-2009

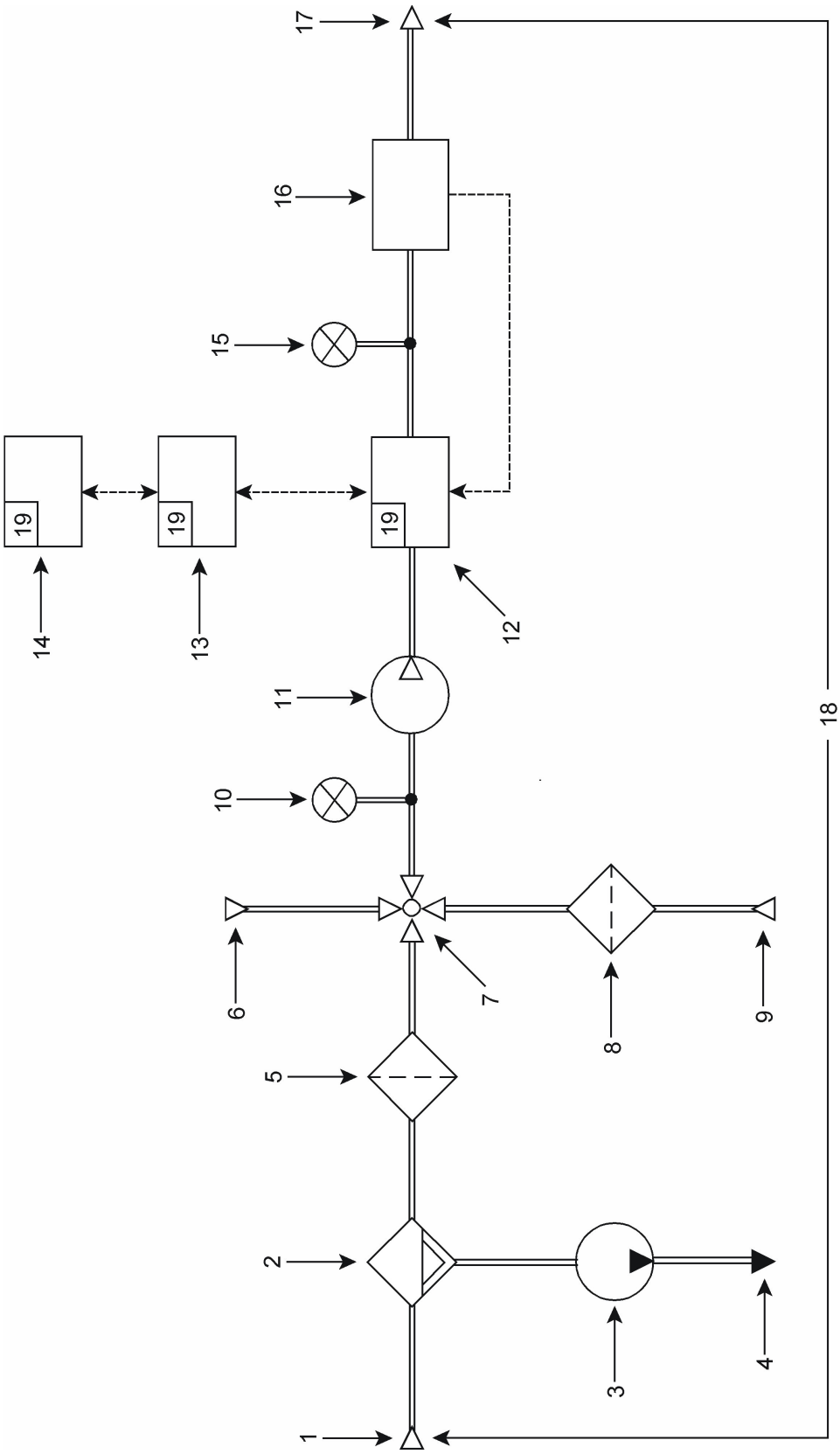

Figure 1 — Diagrammatic illustration of an instrument for measuring vehicle exhaust emissions (references in parenthesis are to the relevant sub-clauses in the text)

Key

1 Sampling probe (6.1.2)
2 Water separator (6.1.4)
3 Water pump
4 Water output
5 Gas filter (6.1.3)
6 Reference gas input (6.1.5)
7 Electro valve
8 Charcoal filter (6.1.5)
9 Gas input for zero-setting (6.1.5)
10 Differential pressure sensor (6.1.7)
11 Gas pump (6.1.6)
12 Measurement bench for CO, CO_2 and HC
13 Indicating device (6.2 and 6.3)
14 Interfaces (6.1.9)
15 Atmospheric pressure sensor
16 O_2 sensor
17 Gas output
18 Gas handling system (6.1.8)
19 Software

© ISO 2009 – All rights reserved

Documents
Document Sharing Hub

Full document details: ISO PAS 03930-2009

5 Metrological requirements

5.1 Indication of the measurement result

The volume fractions of the gas components shall be expressed as a percentage (% vol) for CO, CO_2 and O_2 and in parts per million (ppm vol) for HC. The inscriptions for these units shall be assigned unambiguously to the indication, for example "% vol CO", "% vol CO_2", "% vol O_2" and "ppm vol HC".

It shall be possible to display the indication of the measurement results of the different components simultaneously.

Note: Historically, the units of volume fraction have been used for field inspection. However, gas mixtures can generally be manufactured in molar fractions to more accurate standards. Assuming the gas mixtures obey the ideal gas law, molar fractions are considered to be equal to volume fractions in this Recommendation. Accurate conversion from mole fraction to volume fraction is prescribed in ISO 14912.

5.2 Measuring range

The minimum indicating ranges that may be subdivided shall be as given in Table 1.

Table 1

Measuring ranges			
CO % vol	CO_2 % vol	O_2 % vol	HC ppm vol
0 to 5	0 to 16	0 to 21	0 to 2 000

5.3 Resolution of indication

As indicated in the Scope, this Recommendation only refers to digital indicating instruments. Digital figures shall be at least 5 mm high. The least significant figure of the display shall provide a resolution equal to or higher by one order of magnitude than the values given in Table 2.

Table 2

Minimum resolutions				
CO % vol	CO_2 % vol	O_2 % vol		HC ppm vol
		≤ 4 % vol	> 4 % vol	
0.01	0.1	0.01	0.1	1

The lambda value, if required, shall be displayed digitally to four figures and shall be identified by an appropriate symbol or sign (e.g. lambda or λ = x.xxx). The resolution shall be 0.001.

5.4 Durable recording of the measurement results

The measurement results shall be recorded by a durable means, accompanied by information to identify the particular measurement.

For a printer, the following requirements apply:

a) Printing shall be clear and permanent for the intended use;

b) The resolution of the printed data shall be the same as the resolution of the indication;

c) Printed figures shall be at least 2 mm high;

d) If printing takes place, the name or the symbol of the unit of measurement shall be either to the right of the value or above a column of values;

e) In case of an external printing device, the data transmission shall comply with 6.1.9.

© ISO 2009 – All rights reserved

Documents
Document Sharing Hub
Full document details: ISO PAS 03930-2009