UDC 681.327.6.048

Ref. No. : ISO/R 1004-1969 (E)

ISO

INTERNATIONAL ORGANIZATION FOR STANDARDIZATION

ISO RECOMMENDATION

R 1004

PRINT SPECIFICATIONS FOR MAGNETIC INK CHARACTER RECOGNITION

1st EDITION

March 1969

COPYRIGHT RESERVED

The copyright of ISO Recommendations and ISO Standards belongs to ISO Member Bodies. Reproduction of these documents, in any country, may be authorized therefore only by the national standards organization of that country, being a member of ISO.

For each individual country the only valid standard is the national standard of that country.

Printed in Switzerland

Also issued in French and Russian. Copies to be obtained through the national standards organizations.

Documents
Document Sharing Hub

Full document details: ISO_R 1004_1969

Documents
Document Sharing Hub

Full document details: ISO_R 1004_1969

BRIEF HISTORY

The ISO Recommendation R 1004, *Print specifications for magnetic ink character recognition,* was drawn up by Technical Committee ISO/TC 97, *Computers and information processing,* the Secretariat of which is held by the American National Standards Institute (ANSI).

Work on this question led to the adoption of a Draft ISO Recommendation.

In November 1966, this Draft ISO Recommendation (No. 893) was circulated to all the ISO Member Bodies for enquiry. It was approved, subject to a few modifications of an editorial nature, by the following Member Bodies :

Argentina	France	Portugal
Australia	Germany	Spain
Austria	Ireland	Sweden
Belgium	Israel	Switzerland
Brazil	Italy	U.A.R.
Chile	Japan	United Kingdom
Czechoslovakia	Netherlands	U.S.S.R.
Denmark	New Zealand	

No Member Body opposed the approval of the Draft.

The Draft ISO Recommendation was then submitted by correspondence to the ISO Council, which decided, in March 1969, to accept it as an ISO RECOMMENDATION.

Documents
Document Sharing Hub

Full document details: ISO_R 1004_1969

CONTENTS

Page

Part I : Font E 13 B

1. Scope and field of application 7
2. Character configuration 7
3. Character spacing and alignment 8
4. Character skew 9
5. Character tolerances 9
6. Voids 10
7. Uniformity of ink film 10
8. Extraneous ink (magnetic) 10
9. Embossment (impression) 11
10. Signal level 11
11. Paper 14
12. Format 15

Figures

1–4. Stroke 0 (Zero) to Stroke 3 (Three) 16
5–8. Stroke 4 (Four) to Stroke 7 (Seven) 17
9–12. Stroke 8 (Eight) to Stroke 11 (Symbol 2) 18
13–14. Stroke 12 (Symbol 3) to Stroke 13 (Symbol 4) 19
15. Character design matrix 20
16. Distance between characters 20
17. Allowable variation in vertical alignment 20
18. Allowable character skew 21
19. Average edge 21
20. Average edge tolerance 21
21. Edge irregularity 21
22. Examples of single voids 22
23. Example of rows and columns 22
24. Wave form as it appears on face of oscilloscope 22
25. Distance of right-hand character from right-hand reference edge 22

Appendix X : Circuit diagram of a linear amplifier 23
Appendix Y : Equivalent metric-inch dimensions used in font E 13 B 25

Part II : Font CMC 7

1. Scope and field of application 27
2. Character configuration 27
3. Means of automatic sensing 28
4. Reference edges of documents 28

Documents
Document Sharing Hub

Full document details: ISO_R 1004_1969

5. Print location 28
6. Clear band 28
7. Character spacing and alignment 28
8. Character definitions and tolerances 29
9. Extraneous ink (spots) 30
10. Voids 30
11. Segment end zones 31
12. Uniformity of ink 31
13. Embossment 31
14. Signal level 31
15. Paper 32

Symbols and abbreviations 33

Figures

26. Format of documents 34
27. Magnified view of part of a character 35

Introduction to the drawings of the printed characters 36

Figures

28. Digits : font height 3.20 mm (H_{f1}) 37
29. Symbols : font height 3.20 mm (H_{f1}) 38
30. Letters A to H : font height 3.20 mm (H_{f1}) 39
31. Letters I to Q : font height 3.20 mm (H_{f1}) 40
32. Letters R to Z : font height 3.20 mm (H_{f1}) 41
33. Digits : font height 3.00 mm (H_{f2}) 42
34. Symbols : font height 3.00 mm (H_{f2}) 43
35. Letters A to H : font height 3.00 mm (H_{f2}) 44
36. Letters I to Q : font height 3.00 mm (H_{f2}) 45
37. Letters R to Z : font height 3.00 mm (H_{f2}) 46
38. Digits : font height 2.85 mm (H_{f3}) 47
39. Symbols : font height 2.85 mm (H_{f3}) 48
40. Letters A to H : font height 2.85 mm (H_{f3}) 49
41. Letters I to Q : font height 2.85 mm (H_{f3}) 50
42. Letters R to Z : font height 2.85 mm (H_{f3}) 51
43. Digits : font height 2.70 mm (H_{f4}) 52
44. Symbols : font height 2.70 mm (H_{f4}) 53
45. Letters A to H : font height 2.70 mm (H_{f4}) 54
46. Letters I to Q : font height 2.70 mm (H_{f4}) 55
47. Letters R to Z : font height 2.70 mm (H_{f4}) 56
48. The complete set of font CMC 7 characters 57

Inch equivalents of the metric dimensions used in the character drawings for font CMC 7 58

Appendix Z : Use of symbols 59

Documents
Document Sharing Hub

Full document details: ISO_R 1004_1969

Documents
Document Sharing Hub

Full document details: ISO_R 1004_1969

ISO Recommendation R 1004 March 1969

PRINT SPECIFICATIONS FOR MAGNETIC INK CHARACTER RECOGNITION

PART I

FONT E 13 B

1. SCOPE AND FIELD OF APPLICATION

1.1 Scope

Part I of this ISO Recommendation specifies the shapes, dimensions and tolerances for the ten digits and four special symbols to be printed in magnetic ink* and used for the purpose of character recognition. It describes the various types of printing defects and other printing considerations, together with the tolerances permitted, and also contains specifications for signal level measurement.

1.2 Field of application

The characters specified in Part I of this ISO Recommendation were developed initially for use in banks to permit automatic document handling for bank data processing, but they have application to other automatic handling systems as well.

2. CHARACTER CONFIGURATION

2.1 Designation

The series of standard magnetic ink characters consists of ten digits and four special symbols. They are identified as follows :

Name	Designation
Zero	Stroke 0
One	Stroke 1
Two	Stroke 2
Three	Stroke 3
Four	Stroke 4
Five	Stroke 5
Six	Stroke 6
Seven	Stroke 7
Eight	Stroke 8
Nine	Stroke 9
Symbol 1	Stroke 10
Symbol 2	Stroke 11
Symbol 3	Stroke 12
Symbol 4	Stroke 13

* As used in this ISO Recommendation, the term "magnetic ink" means ink capable of being magnetized and sensed.

AVA Documents
Document Sharing Hub

Full document details: ISO_R 1004_1969

2.2 Dimensions

Detailed dimensions and the reference centre lines of the printed characters for Strokes 0 to 13 are shown in Figures 1 to 14 inclusive. Figure 15 illustrates the character design matrix. Dimensions of the printed characters are as follows :

(1)	character height	2.972 mm	(0.117 in)
(2)	character widths	1.321 mm 1.651 mm 1.981 mm 2.311 mm	(0.052 in) (0.065 in) (0.078 in) (0.091 in)
(3)	width of horizontal and vertical bars	0.330 mm	(0.013 in)
(4)	minimum width of horizontal bars (this specification does not apply to vertical bars; see clause 5.5)	0.279 mm	(0.011 in)
(5)	corner radii (except Stroke 0, see Fig. 1)	0.165 mm	(0.0065 in)
(6)	tolerance (average edge)	± 0.038 mm	(± 0.0015 in)

3. CHARACTER SPACING AND ALIGNMENT

3.1 Spacing of characters

3.1.1 *Common fields (fixed format)*

3.1.1.1 The distance between the right average edges of adjacent characters shall be 3.175 ± 0.254 mm (0.125 ± 0.010 in) (see Fig. 16).
(Average edge is defined and discussed in section 5.)

3.1.1.2 The accumulation of spacing tolerances in any common (fixed format) field is limited to the extent that the accumulation does not infringe upon the boundaries defining this field.

3.1.2 *Minimum space –any field*

The minimum space between the right average edges of adjacent characters, whether they are in the same field or adjoining fields, can never be less than 2.921 mm (0.115 in). This also applies to variable format fields. Maximum or other spacing requirements in variable fields shall be specified by the individual machine manufacturer involved.

3.2 Alignment of characters

Alignment. The relative vertical location of a character with respect to adjacent characters within a given field. The horizontal centre line of each character is indicated on drawings of the printed character by the symbol $℄_H$. These centre lines serve to establish vertical alignment of all characters, since all characters are designed about the same horizontal centre line.

Vertical alignment tolerance is that which is consistent with good printing practice and subject to the following interpretations :

(*a*) alignment of a line of characters printed in any field should be such that the bottom edges of adjacent characters within each field do not vary vertically by more than 0.178 mm (0.007 in) (see Fig. 17);

(*b*) however, alignment of the bottom edges of adjacent characters printed in variable format fields may vary vertically by more than 0.178 mm (0.007 in) if permitted by the manufacturer of the paper handling equipment to be used;

(*c*) on characters that do not come down to the "base" line (see Fig. 13, 14 and 16), the tolerance specified in paragraph (*a*) applies to the horizontal centre line.

AVA Documents
Document Sharing Hub

Full document details: ISO_R 1004_1969

4. CHARACTER SKEW

The maximum allowable character skew is ± 1°30′ measured with respect to the bottom edge of the document. (See Fig. 18.)

5. CHARACTER TOLERANCES

5.1 Dimensions

See Figures 1 to 14 for dimensions of printed characters.

5.2 Definition of "average edge"

Average edge. An imaginary line that divides the irregularities along the edge of a printed character so that the summation of the white areas on one side of the line is equal to the summation of the black areas on the other side. (See Fig. 19). The typical edge of a printed character is not a straight line.

5.3 Average edge tolerance

The average edge tolerance for all stroke edges shall be ± 0.038 mm (± 0.0015 in) applied to the dimensions (measured from ℄ and $℄_H$) that locate the edges. A typical illustration of this tolerance is shown in Figure 20.

The average edge of the radii shall be tangential to the average edge of the stroke and shall fall within the ± 0.038 mm (± 0.0015 in) tolerance specified for stroke edges.

5.4 Edge irregularity tolerance

5.4.1 Peaks and valleys about the average edge are permitted to extend to ± 0.089 mm (± 0.0035 in) from the dimension locating the edge. An example is shown in Figure 21. However, when these occur the sum of the edge present in the 0.038 to 0.089 mm (0.0015 to 0.0035 in) zone shall not exceed 25 % of the total edge.

5.4.2 An occasional void can be present at the edge and cause a valley that exceeds the limits mentioned above. The maximum allowable size of such voids is specified in section 6.

5.4.3 An occasional excursion (such as feathering or stringing out) can be present at the edge and extend beyond the 0.038 to 0.089 mm (0.0015 to 0.0035 in) zone. Such occasional excursions are not considered to be edge irregularities, and are defined as extraneous ink that is "attached" to the character. The maximum allowable size and quantity of such excursions is given in section 8.

In measuring the size of such excursions, only that portion that extends beyond the 0.089 mm (0.0035 in) limit mentioned in clause 5.4.1 should be considered since the portion of the excursion in the 0.038 to 0.089 mm (0.0015 to 0.0035 in) zone is controlled by character edge irregularity limits given in clause 5.4.1.

5.5 Minimum width of horizontal bars

The distance between the average edges of any horizontal bar shall be at least 0.279 mm (0.011 in). (This specification is an adjunct to the dimension specification locating each edge. This specification does not apply to vertical bars, since vertical bars are controlled entirely by the dimensions locating each edge.)

AVA Documents
Document Sharing Hub

Full document details: ISO_R 1004_1969

6. VOIDS

6.1 Definition

Voids. The absence of ink within the specified outline of the printed character.

6.2 Maximum allowable single void

6.2.1 The maximum allowable single void anywhere in the character, including at an edge, shall be of a size that can be contained entirely within the boundary of a 0.203 mm × 0.203 mm (0.008 in × 0.008 in) square, with the following exception :

If the portion of the character involving a single void is two or more zones wide (each zone is 0.330 mm (0.013 in) wide), then the maximum allowable single void must be completely surrounded by ink and contained entirely within the boundary of a 0.254 mm × 0.254 mm (0.010 in × 0.010 in) square.

In this case, voids at edges are not included and are, therefore, limited to a 0.203 mm × 0.203 mm (0.008 in × 0.008 in) square. (See Fig. 22.)

6.2.2 Single voids that are long and narrow are called "needle" type voids. They are allowable in any length anywhere on the character provided that they are no wider than 0.051 mm (0.002 in), average edge to average edge.

6.3 Maximum allowable combined voids

The combined area of all voids, in any vertical column or horizontal row nominally 0.330 mm (0.013 in) wide, shall not exceed 20 % of the area of the column or row. (See Fig. 23.)

7. UNIFORMITY OF INK FILM

The ink deposited shall be uniformly distributed within the outlines of each character. Conditions to be avoided include excessive squeeze-out, halo, and other uneven deposits.

A ridge of ink that outlines a character and that appears dense in relation to the ink deposited within the character is acceptable provided that it does not exceed 0.038 mm (0.0015 in) between its average edges. Such ridges are predominant in letterpress printing and some impact printing.

8. EXTRANEOUS INK (MAGNETIC)

8.1 Definition

Extraneous ink. Magnetic ink, other than the printed character, located within the 15.875 mm (0.625 in) common language clear band. It is usually described as splatter, smear, tracking, feathering, stringing out, toning, back offset, background, etc.

8.2 Limitations

8.2.1 *Extraneous ink front*

Extraneous magnetic ink on the front of the document is not acceptable if it is "visible" to the experienced eye without the aid of a magnifying device. This statement is subject to the following interpretation :

Spots that cannot be contained in a 0.076 mm × 0.076 mm (0.003 in × 0.003 in) square are defined as "visible"; however, random occasional spots that are "visible" are acceptable provided that they can be contained in a 0.102 mm × 0.102 mm (0.004 in × 0.004 in) square and they are limited to one per 3.175 mm (0.125 in) character space and total not more than five per field. Spots that cannot be contained in a 0.102 mm × 0.102 mm (0.004 in × 0.004 in) square are not acceptable.

AVA Documents
Document Sharing Hub

Full document details: ISO_R 1004_1969

Spots that are found to be located within the outermost limits established by the character edge irregularity tolerance are to be considered under the character edge irregularity specifications.

The printer should make every reasonable effort to eliminate extraneous ink on the front of the document since its presence can be a cause for "machine reading rejects".

8.2.2 *Extraneous ink back*

Extraneous magnetic ink on the reverse side of the clear band is not acceptable if it is more than barely visible to the unaided eye. This statement is subject to the following interpretation :

Spots that cannot be contained in a 0.152 mm × 0.152 mm (0.006 in × 0.006 in) square, or an equivalent area, are not acceptable.

9. EMBOSSMENT (IMPRESSION)

Embossment of the printed character shall not exceed that which is barely detectable to the experienced touch or eye. Barely detectable embossment is defined as that which does not exceed 0.025 mm (0.001 in) in depth on the front of the document.

10. SIGNAL LEVEL

10.1 Definitions

10.1.1 *Signal level.* The amplitude of the voltage wave form produced when a d.c. magnetized printed character is scanned by a suitable magnetic reading head.

A typical wave form as it appears on the face of the oscilloscope is given in Figure 24.

10.1.2 *Nominal signal level.* The signal obtained from a reference standard printing sample (designated as the "May 27, 1958, Reference Document"; see clause 10.1.4) when suitable test equipment is used. (See clause 10.2.)

This reference standard, maintained in a vault, is a paper document on which is printed each character of the E 13 B font under very precise conditions so that the signal level of each character thereon, by definition, is 100 % and is called the *nominal signal level* of *that* character.

10.1.3 *Relative signal level.* The ratio, stated as a percentage, that the signal level of a character being measured bears to the nominal signal level for that character on the reference standard taken as 100 %.

The signal level of the character being measured is obtained using suitable procedures and testing equipment. (See clauses 10.2, 10.3 and 10.4.)

10.1.4 *Secondary reference documents.* Paper documents printed in magnetic ink with the characters of the E 13 B font.

These documents are of known relative signal level and are made available for use in calibration of equipment used to measure relative signal level. Secondary reference documents are selected such that the relative signal level of the printing thereon is as close as practicable to 100 % of the nominal signal level. One or more characters on a secondary reference document are marked to indicate the actual relative signal level of that character.*

* Secondary reference documents may be obtained from the custodian of the "May 27, 1958, Reference Document" at the following address : Bank Administration Institute, P.O. Box 500, Park Ridge, Illinois, U.S.A.

Documents
Document Sharing Hub

Full document details: ISO_R 1004_1969

10.2 Test equipment

Test equipment described below, or its equivalent, is suitable for measuring signal level.

10.2.1 *Means for moving a document* bearing the dry magnetic ink printing from left to right (the characters are scanned from right to left), in a direction parallel to the bottom reference edge, past a d.c. magnetizing head and a magnetic reading head, and including means for holding the document in intimate contact with the face of the magnetizing head and reading head.

The transport shall move the document at the rate of 3.81 m (150 in) per second within 2 %. Combined character skew from all causes shall not exceed 1°30′ relative to the centre line of the reading head gap.

10.2.2 *A d.c. magnetizing head* capable of magnetizing the characters to saturation in a direction parallel to the bottom reference edge and in the plane of the printed characters. The leading pole relative to the printed character is to be the north pole.

10.2.3 *A single-gap, magnetic reading head* mounted with the long axis of the gap perpendicular to the bottom reference edge and parallel to the plane of the printed characters. Considering the reading head gap as a plane of negligible thickness, the plane of the gap must be perpendicular to the plane of the document and to the bottom reference edge of the document.

The reading head shall have a 0.076 mm (0.003 in) gap and a minimum resonant frequency of 40 kHz. The height of the reading head gap shall be sufficient to scan the 5.875 mm (0.625 in) clear band. The head shall be shielded on all sides, except the reading face and the back, such that any induced noise shall not cause a signal to noise ratio less than 40 : 1 when reading 100 % reference material.*

10.2.4 *A linear amplifier* to amplify the output of the magnetic reading head for presentation on an oscilloscope. The amplifier has the following characteristics :

10.2.4.1 GAIN

The amplifier gain shall be such that an input sine wave of 10 ± 0.2 mV peak to peak, at 1 kHz, produces a sine wave output of 2.4 ± 0.4 V peak to peak.

10.2.4.2 FREQUENCY RESPONSE

(*a*) The amplifier gain must not vary by more than ± 0.5 dB from 1 kHz gain over a frequency range of 200 Hz to 3 kHz.

(*b*) The amplifier gain between the frequencies 200 Hz and 75 Hz must not drop more than 3 dB below the 1 kHz gain.

(*c*) The amplifier gain below 75 Hz must not exceed the 1 kHz gain.

(*d*) The amplifier gain above 3 kHz must drop on a smooth curve such that at 5.1 ± 0.6 kHz the gain is 3 dB below the 1 kHz gain, and at 11.2 ± 1.2 kHz the gain is 12 dB below the 1 kHz gain.

NOTE. – A gain 3 dB below a reference value is 0.707 of the reference value; a gain 12 dB below a reference value is 0.25 of the reference value.

10.2.4.3 ROLL-OFF

The high-frequency roll-off characteristics of the amplifier must be equivalent to those of a four-section resistance-capacitance filter with buffering between stages, that is, nonpeaking, and having an attenuation of 6 dB per octave per stage or 24 dB per octave for the four stages.

* The Brush Clevite reading head No. BK 3806/S 7165, or its equivalent, is suitable.

AVA Documents
Document Sharing Hub

Full document details: ISO_R 1004_1969

10.2.4.4 LINEARITY

At any frequency within the range from 75 Hz to 11.2 ± 1.2 kHz, the amplifier gain must be linear within ± 0.5 dB for an input voltage range of 3 to 25 mV peak to peak.

10.2.4.5 NOISE

With the input connection to ground, the noise output shall not exceed a voltage of 0.1 mV peak to peak, which is equivalent to 1 % of the nominal signal level.

A circuit diagram of a suitable amplifier is given in Appendix X.

10.2.5 *An oscilloscope* for display of the voltage wave form(s) of the character(s) to be measured and the voltage wave form(s) of the corresponding character(s) on a secondary reference document. The oscilloscope may be of any commercially available type equipped with a reticle bearing horizontal rulings.*

10.3 Testing procedure

10.3.1 The horizontal trace which appears on the face of the oscilloscope when the output of the amplifier is connected to the a.c. input of the oscilloscope, but with no document being scanned, is adjusted to coincide with the lowest ruling on the oscilloscope reticle.

10.3.2 A secondary reference document is placed in the transport and scanned. It is preferable that Symbol 2, Symbol 3 or Symbol 4 be used, since each of these characters has two identical bars (see Note below) from which the average amplitude may be measured. If it is desired to measure other characters, the highest single positive peak or the average of positive peaks that are similar in amplitude may be used. The vertical gain of the oscilloscope is then adjusted so that the deflection to the uppermost division of the reticle corresponds to the base line to positive peak amplitude of 200 % relative signal level. This may be done as follows :

10.3.2.1 Determine the number of major divisions on the reticle in the vertical direction.

10.3.2.2 Divide this number by two.

10.3.2.3 Multiply this result by the relative signal level percentage on the secondary reference document character being used, divided by 100. Adjust the vertical gain so that the vertical deflection of the character being observed is equal to this calculated deflection.

Example

Eight major divisions on the face of the oscilloscope.

Secondary reference document relative signal level is 104 %.

Number of divisions $= \frac{8}{2} \times \frac{104}{100} = 4.16.$

Adjust the vertical gain so that the average amplitude of the two identical positive peaks equals 4.16 divisions on the reticle.

Four divisions then correspond to 100 % relative signal level for the character which was used to make the calibration

NOTE. – On secondary reference documents (see clause 10.1.4), the two positive peaks resulting from two identical bars will not differ in amplitude by more than 10 %.

* The Tektronix oscilloscope Type 560 or 561, with Type 50 and 51 Plug-in Modules, or the equivalent, is suitable.

AVA Documents
Document Sharing Hub

Full document details: ISO_R 1004_1969

10.3.3 With the test equipment so calibrated, the relative signal level of any character may be determined by observing the vertical deflection of the positive peaks of the character corresponding to the character on the secondary reference document, as described in clause 10.3.2, dividing this by the number of divisions corresponding to 100 %, and multiplying by 100 %.

Example

Calibration as in clause 10.3.2.

Deflection of unknown sample is 4.4 divisions.

Relative signal level of unknown sample $= \frac{4.4}{4.0} \times 100\,\% = 110\,\%$.

10.3.4 Another optional method for calibration is as follows :

Assign specific linear values to each major division on the reticle, such as the following :

bottom line	0 %
2nd line	50 %
3rd line	100 %
4th line	150 %
5th line	200 %
6th line	250 %

Then place the vertical position of the free-running trace, with no document in transport, at the 0 % line.

Place the secondary reference standard in transport and adjust the vertical gain of the oscilloscope so that the highest single positive peak, or the average of similar positive peaks, reads a value on the oscilloscope graduations that is identical to the value designated on the reference document.

The test equipment is then calibrated.

If it is desired to measure other character(s), it is necessary that the test equipment be recalibrated with a reference standard for the character(s) to be measured.

10.4 Relative signal level tolerance

The relative signal level from any printed character may vary from 50 to 200 % of its nominal signal level.

10.5 Residual signal level

Residual signal level. The signal delivered by a character which has been voided.

Whenever misencoded information is voided, the residual signal level shall not exceed 5 % of the nominal signal level for Symbol 3 (Stroke 12).

The method employed should permit re-encoding of the document.

11. PAPER

It is recognized that certain particles embedded in paper can be a cause for machine reading rejects.

Paper should be used from which magnetic particles, such as iron and other ferromagnetic materials, have been eliminated or reduced to a minimum.

AVA Documents
Document Sharing Hub

Full document details: ISO_R 1004_1969

12. FORMAT

12.1 Reference edges

12.1.1 *Horizontal dimensions*

All horizontal format dimensions are measured from the right-hand edge of the document. The right hand edge of the first or right-hand character shall be located 7.925 ± 1.575 mm (0.312 ± 0.062 in) from the right-hand reference edge. (See Fig. 25, page 22.)

12.1.2 *Vertical dimensions*

All vertical format dimensions are measured from the bottom edge of the document.

12.2 Clear band

Clear band. A band 15.875 mm (0.625 in) wide that must be free of any magnetic ink, other than prints of the acceptable characters, and whose location on a document is determined by the application involved. Fonts E 13 B and CMC 7 shall not be permitted in the same clear band on any document.

AVA Documents
Document Sharing Hub

Full document details: ISO_R 1004_1969

Dimensions in millimetres

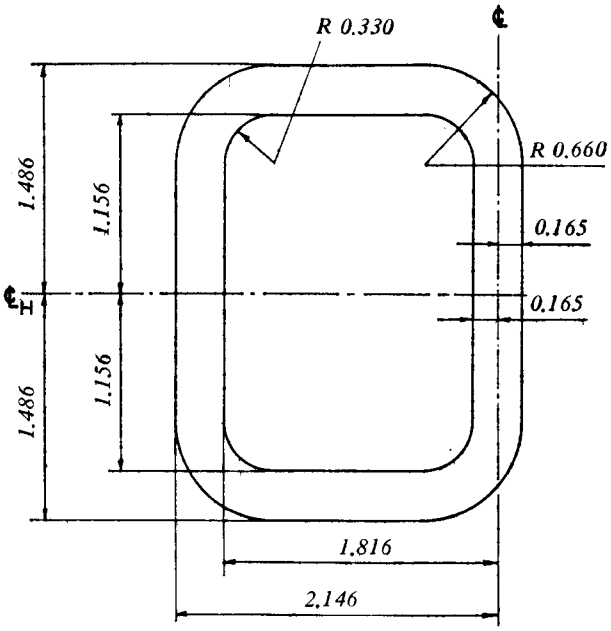

FIG. 1 – **Stroke 0 (Zero)**

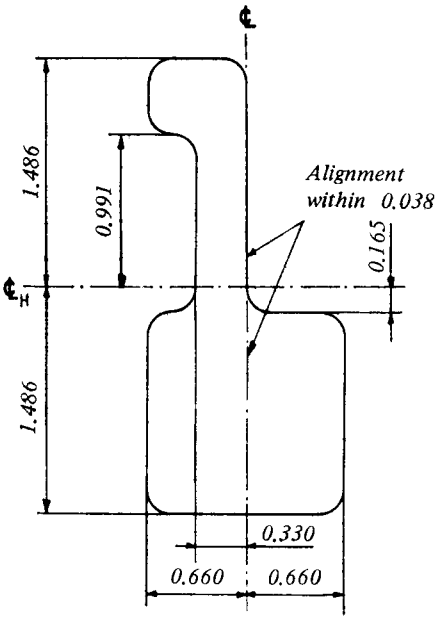

FIG. 2 – **Stroke 1 (One)**

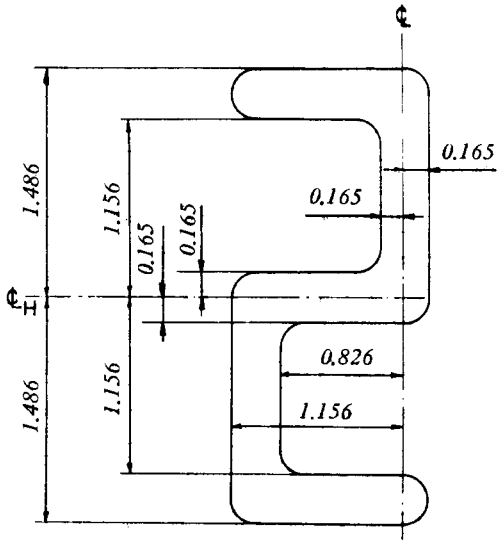

FIG. 3 – **Stroke 2 (Two)**

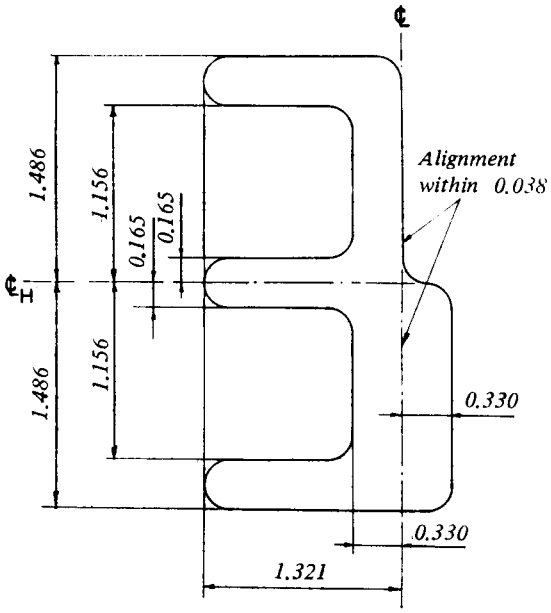

FIG. 4 – **Stroke 3 (Three)**

Documents
Document Sharing Hub

Full document details: ISO_R 1004_1969

Dimensions in millimetres

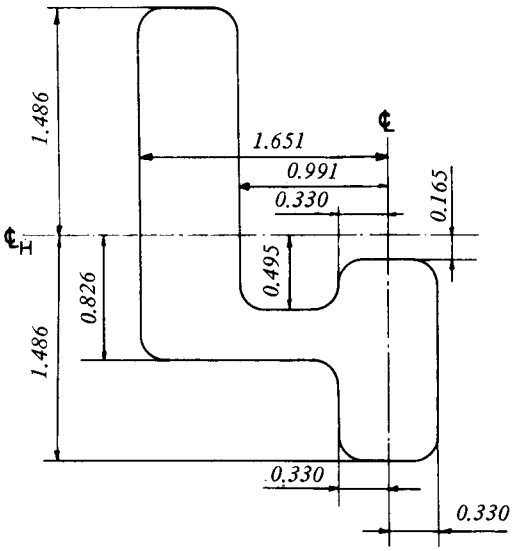

FIG. 5 – **Stroke 4 (Four)**

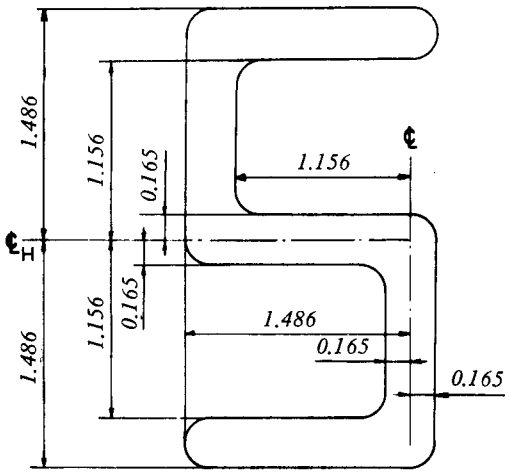

FIG. 6 – **Stroke 5 (Five)**

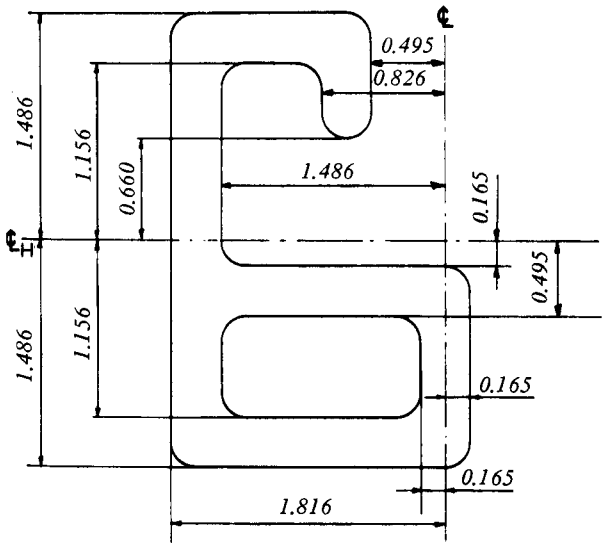

FIG. 7 – **Stroke 6 (Six)**

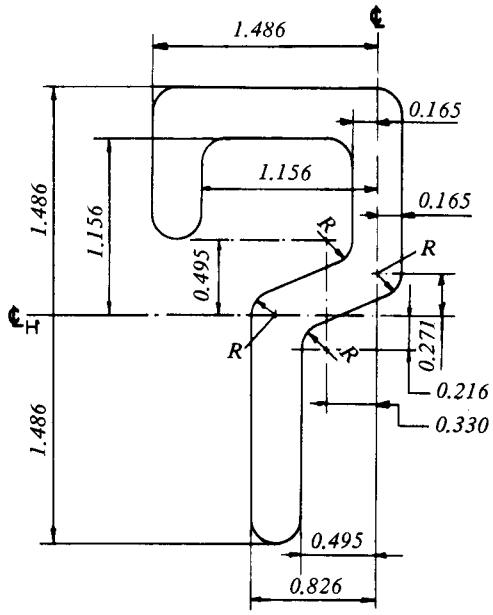

FIG. 8 – **Stroke 7 (Seven)**

Documents
Document Sharing Hub

Full document details: ISO_R 1004_1969

Dimensions in millimetres

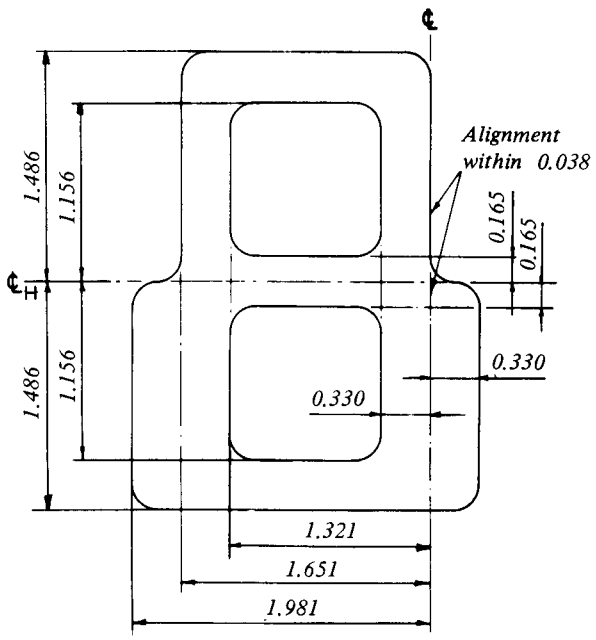

FIG. 9 – **Stroke 8 (Eight)**

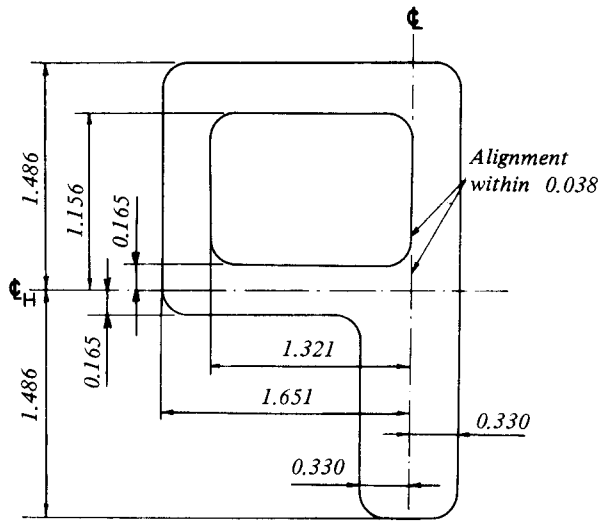

FIG. 10 – **Stroke 9 (Nine)**

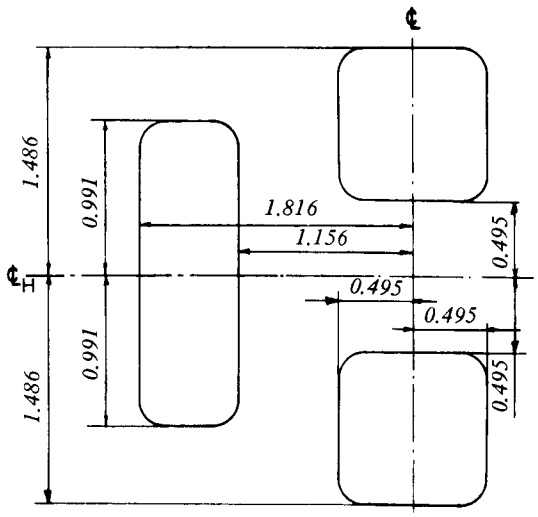

FIG. 11 – **Stroke 10 (Symbol 1)**

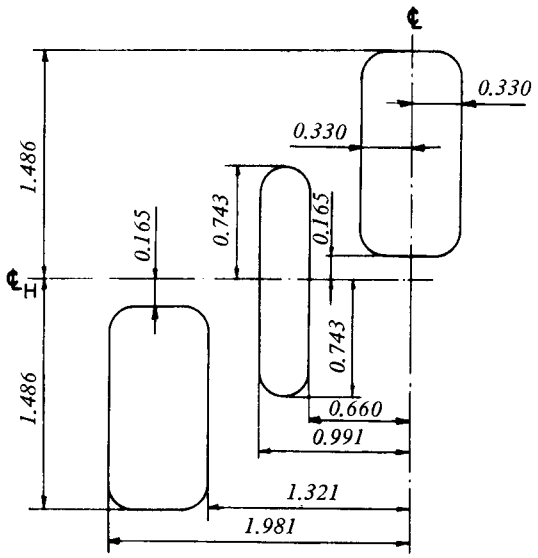

FIG. 12 – **Stroke 11 (Symbol 2)**

Documents
Document Sharing Hub

Full document details: ISO_R 1004_1969