UDC 621.869.88

Ref. No. : ISO/R 1161-1970 (E)

# ISO

INTERNATIONAL ORGANIZATION FOR STANDARDIZATION

# ISO RECOMMENDATION

# R 1161

## SPECIFICATION OF CORNER FITTINGS FOR SERIES 1 FREIGHT CONTAINERS

1st EDITION

January 1970

COPYRIGHT RESERVED

The copyright of ISO Recommendations and ISO Standards belongs to ISO Member Bodies. Reproduction of these documents, in any country, may be authorized therefore only by the national standards organization of that country, being a member of ISO.

For each individual country the only valid standard is the national standard of that country.

Printed in Switzerland

Also issued in French and Russian. Copies to be obtained through the national standards organizations.

Documents
Document Sharing Hub

Full document details: ISO_R 1161_1970

Documents
Document Sharing Hub

Full document details: ISO_R 1161_1970

## BRIEF HISTORY

The ISO Recommendation R 1161, *Specification of corner fittings for series 1 freight containers,* was drawn up by Technical Committee ISO/TC 104, *Freight containers,* the Secretariat of which is held by the American National Standards Institute (ANSI).

Work on this question led to the adoption of a Draft ISO Recommendation.

In March 1968, this Draft ISO Recommendation (No. 1019) was circulated to all the ISO Member Bodies for enquiry. It received the necessary majority for approval. However, since technical modifications had been made in the Draft, ISO/TC 104 Secretariat submitted a second Draft ISO Recommendation No. 1019, in January 1969, to all ISO Member Bodies for enquiry. This second Draft was approved, subject to a few modifications of an editorial nature, by the following Member Bodies :

| | | |
|---|---|---|
| Australia | Israel | Romania |
| Austria | Italy | South Africa, Rep. of |
| Belgium | Japan | Sweden |
| Brazil | Netherlands | Switzerland |
| Czechoslovakia | New Zealands | Thailand |
| Germany | Norway | Turkey |
| Greece | Peru | U.A.R. |
| Hungary | Poland | U.S.A. |
| India | Portugal | U.S.S.R. |

Two Member Bodies opposed the approval of the second Draft :

France
United Kingdom

This second Draft ISO Recommendation was then submitted by correspondence to the ISO Council, which decided, in January 1970, to accept it as an ISO RECOMMENDATION.

Documents
Document Sharing Hub

Full document details: ISO_R 1161_1970

CONTENTS

Page

Introduction . . . . . 5

1. Scope . . . . . 6

2. Dimensions . . . . . 6

3. Strength requirements . . . . . 6

Figures

1. Diagrammatic sketch showing corner fitting locations . . . . . 7

2. Top corner fitting – Dimensions in millimetres . . . . . 8

3. Top corner fitting – Dimensions in inches . . . . . 9

4. Bottom corner fitting – Dimensions in millimetres . . . . . 10

5. Bottom corner fitting – Dimensions in inches . . . . . 11

6. Assembled corner fittings – Diagonal tolerances . . . . . 12

Annex A : Typical handling and securing devices . . . . . 15

Annex B : Typical handling and securing methods . . . . . 17

Annex C : Corner fitting design criteria . . . . . 19

Appendix Y : Release of patents . . . . . 22

Appendix Z : Precautionary note on end-to-end coupling . . . . . 23

Documents
Document Sharing Hub

Full document details: ISO_R 1161_1970

ISO Recommendation R 1161 January 1970

# SPECIFICATION OF CORNER FITTINGS FOR SERIES 1 FREIGHT CONTAINERS

## INTRODUCTION

This ISO Recommendation on corner fittings represents the efforts of technical and operational personnel drawn from all phases of transportation industry. The drawings describe the fittings for the top and bottom corner of series 1 freight containers which will provide compatibility in interchange between transportation modes. Care has been taken to limit consideration only to those details vital to this function.

The location, size and configuration of corner fitting apertures are specified. The faces of the corner fittings having apertures for the engagement of handling and securing devices have prescribed thickness and tolerances as shown in Figures 2, 3, 4 and 5 on pages 8 to 11. The thickness of the blank walls is not prescribed since they are not involved in the engagement of the handling and securing devices, as long as their inner surfaces do not protrude into the corner fitting cavity reserved for the engaging devices. Examples of handling and securing devices are shown in Annex A.

The purpose of this ISO Recommendation is to define those details of design vital to container interchange in automatic, semi-automatic and conventional systems. Examples of the use of corner fittings are shown in Annex B.

The criteria used in determining the design are given in Annex C.

NOTE. – The requirements of this ISO Recommendation do not preclude the provision of additional facilities for lifting either from the top or at the base of the freight container.

AVA Documents
Document Sharing Hub

Full document details: ISO_R 1161_1970

## 1. SCOPE

This ISO Recommendation establishes the basic dimensions and the functional and strength requirements of corner fittings for series 1 freight containers which conform to ISO Recommendation R 668, *Dimensions and ratings of freight containers.*

## 2. DIMENSIONS

The dimensions and tolerances of the corner fittings shall conform to the drawings, Figures 2, 3, 4 and 5, on pages 8 to 11. Each container will have two right-hand top corner fittings (on the right as the observer faces the container) and two left-hand top corner fittings which are the mirror opposite of the right-hand fittings (see Figure 1). When bottom corner fittings are required, a similar configuration would exist. The corner fitting drawings on pages 8 to 11 illustrate right-hand (RH) top and bottom corner fittings only; for the left-hand (LH) corner fittings the dimensions are simply transposed.

After assembly and installation of the corner fittings, the perpendicularity or trueness of the assembled fittings shall be determined by measuring the difference between dimensions $D_1$ and $D_2$, between $D_3$ and $D_4$ and between $D_5$ and $D_6$ illustrated in Figure 6, page 12. The maximum allowable differences, expressed as "$K_1$ max." and "$K_2$ max." in the table on page 13, shall not be exceeded.

## 3. STRENGTH REQUIREMENTS

The corner fittings shall be designed and constructed in such a manner and of such materials as to enable them to pass the operating and testing requirements which are covered in ISO Recommendation R 1496*, *Specification and testing of series 1 freight containers.*

* At present, Draft ISO Recommendation.

AVA Documents
Document Sharing Hub

Full document details: ISO_R 1161_1970

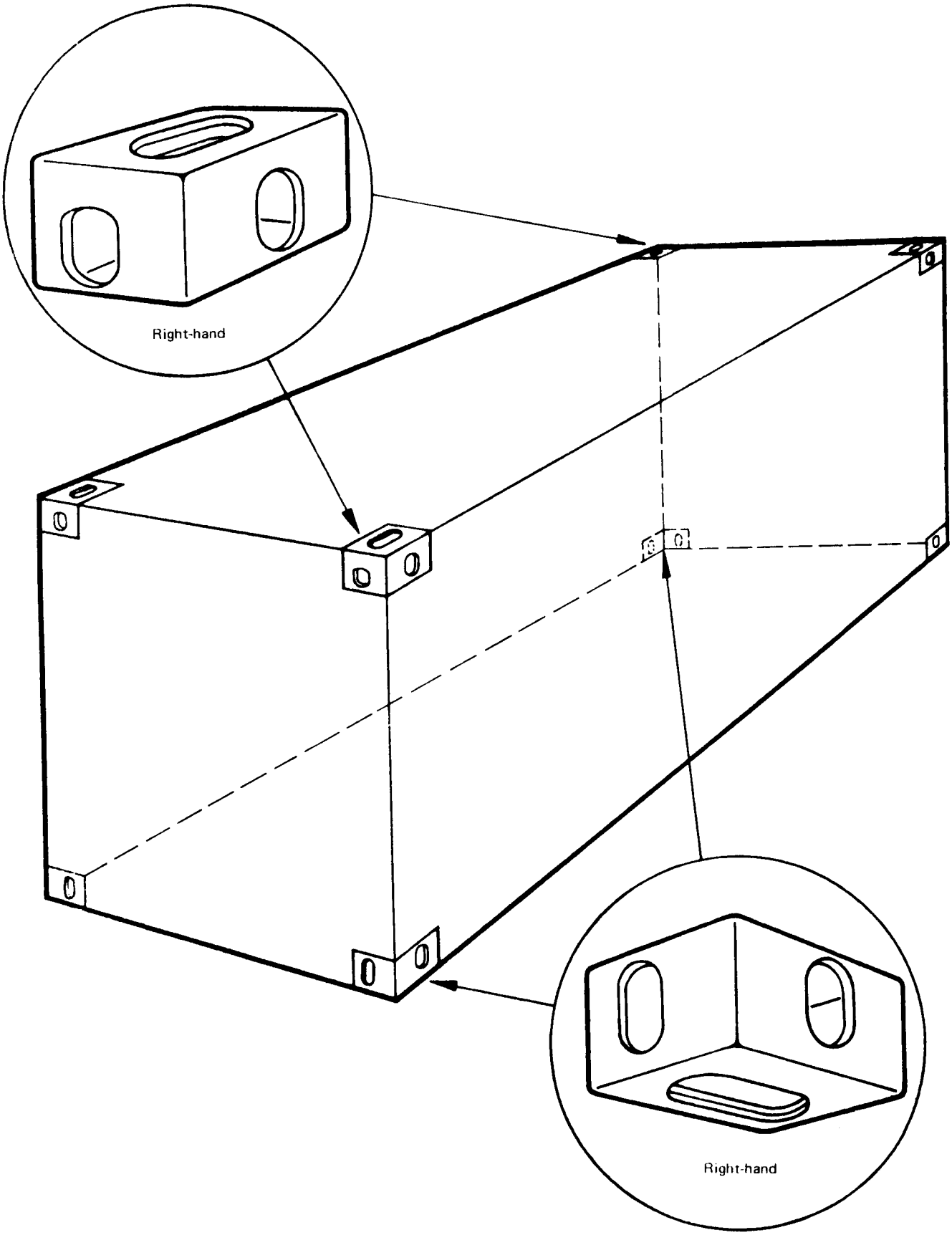


FIG. 1 – **Diagrammatic sketch showing corner fitting locations**

AVA Documents
Document Sharing Hub

Full document details: ISO_R 1161_1970

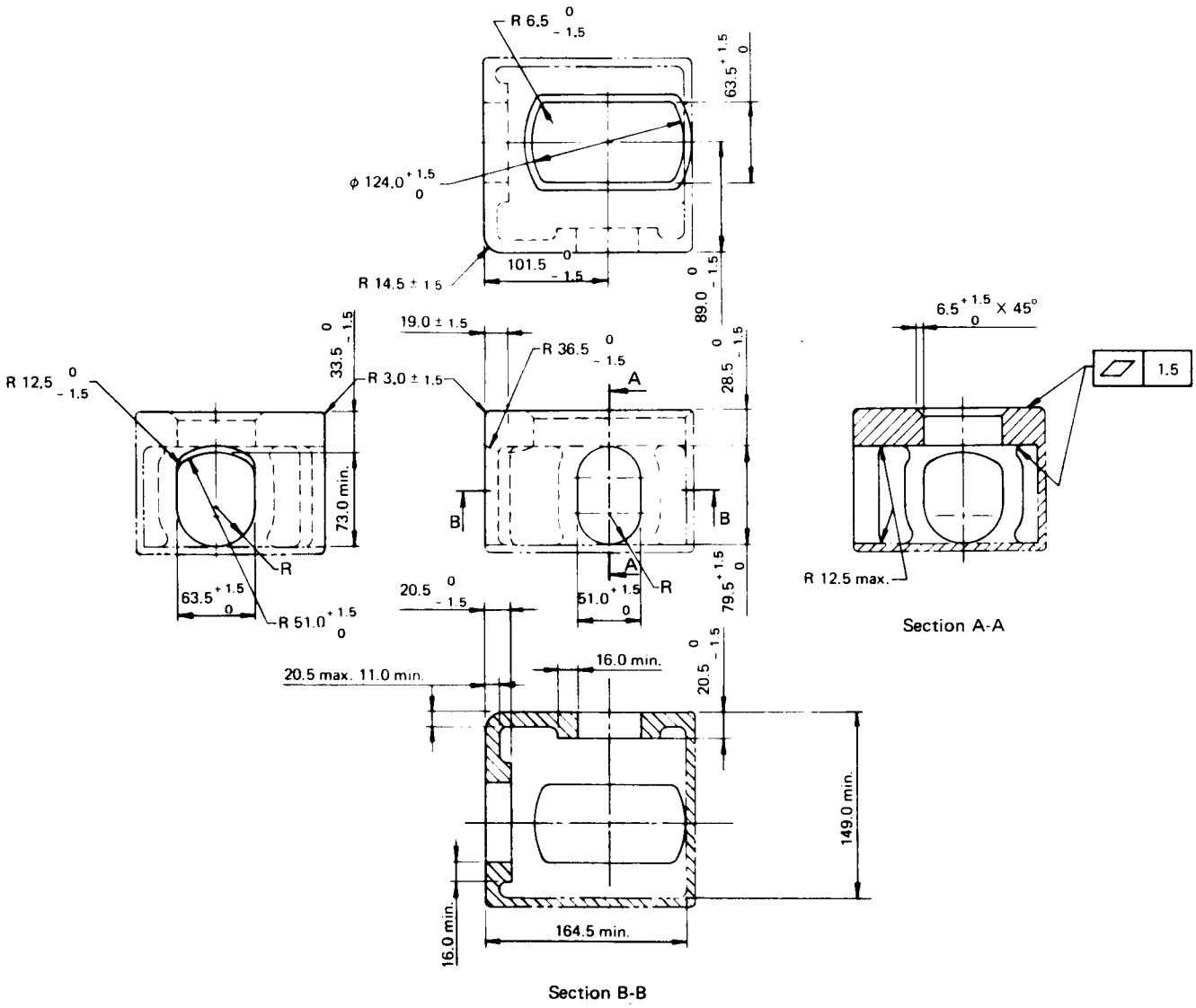


NOTES

1. Solid and dotted lines (—— and – –) show surfaces and contours which must be physically duplicated in the fitting.

2. Phantom lines (—— – —— – ) show optional walls, which may be used to develop a box-shaped fitting.

3. Outside and inside corner radii where sharp corners are shown must be 3 mm maximum except as noted.

4. Four fittings are required per container : two right-hand and two left-hand.

FIG. 2 – **Top corner fitting – Dimensions in millimetres**

Documents
Document Sharing Hub

Full document details: ISO_R 1161_1970