UDC 621.882.221.082.8

Ref. No. : ISO/R 1480-1970 (E)

ISO

INTERNATIONAL ORGANIZATION FOR STANDARDIZATION

ISO RECOMMENDATION

R 1480

HEXAGON HEAD TAPPING SCREWS

INCH SERIES

1st EDITION

October 1970

COPYRIGHT RESERVED

The copyright of ISO Recommendations and ISO Standards belongs to ISO Member Bodies. Reproduction of these documents, in any country, may be authorized therefore only by the national standards organization of that country, being a member of ISO.

For each individual country the only valid standard is the national standard of that country.

Printed in Switzerland

Also issued in French and Russian. Copies to be obtained through the national standards organizations.

Documents
Document Sharing Hub

Full document details: ISO_R 1480_1970

ISO Recommendation R 1480 October 1970

HEXAGON HEAD TAPPING SCREWS

INCH SERIES

1. SCOPE

This ISO Recommendation specifies dimensions of hexagon head tapping screws, inch series, and provides a system of standard lengths, i.e. recommended combinations of thread size and nominal length.

2. DIMENSIONS

Principal dimensions are given in the Table opposite. For thread dimensions and thread ends see ISO Recommendation R 1478, *Tapping screw thread – Dimensions in millimetres and inches.*

Nominal sizes of series I should be preferred.

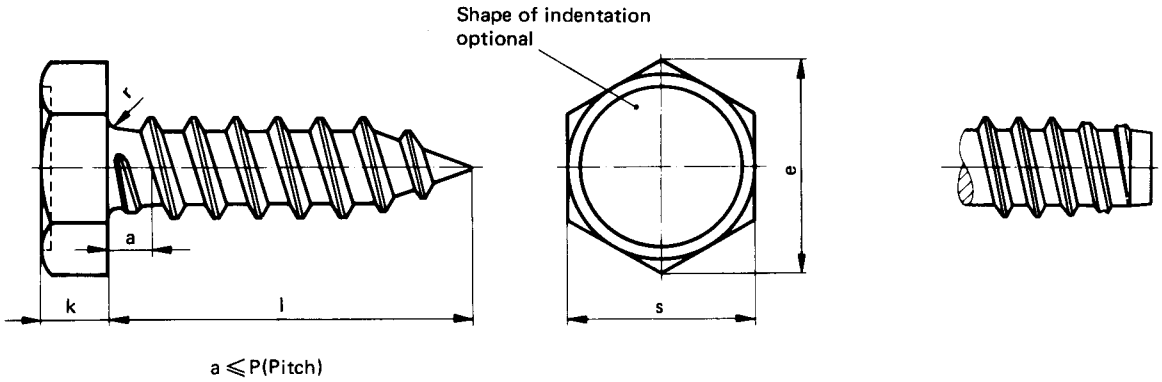

Cone end (type AB)

Flat end (type B)

Documents
Document Sharing Hub

Full document details: ISO_R 1480_1970