UDC 621.56/.59 : 621.51.001.4

Ref. No. : ISO/R 917-1968 (E)

Transformed.

ISO

INTERNATIONAL ORGANIZATION FOR STANDARDIZATION

ISO RECOMMENDATION

R 917

TESTING OF REFRIGERANT COMPRESSORS

1st EDITION

December 1968

COPYRIGHT RESERVED

The copyright of ISO Recommendations and ISO Standards belongs to ISO Member Bodies. Reproduction of these documents, in any country, may be authorized therefore only by the national standards organization of that country, being a member of ISO.

For each individual country the only valid standard is the national standard of that country.

Printed in Switzerland

Also issued in French and Russian. Copies to be obtained through the national standards organizations.

AVA Documents
Document Sharing Hub

Full document details: ISO_R 917_1968

Documents
Document Sharing Hub

Full document details: ISO_R 917_1968

French version of page 3 wrongly ~~[illegible]~~ printed into the English edition of ISO/R 917, at Vermont
Remaining copies rectified.
Corrected copy placed below

HISTORIQUE

La Recommandation ISO/R 917, *Essais des compresseurs pour fluides frigorigènes,* a été élaborée par le Comité Technique ISO/TC 86, *Froid,* dont le Secrétariat est assuré par la British Standards Institution (BSI).

Les travaux relatifs à cette question ont été confiés au Sous-Comité ISO/TC 86/SC 4, dont le Secrétariat est assuré par le Royaume-Uni. Les travaux commencèrent en 1960 et les "Recommandations pour un code international d'essais des machines frigorifiques"*, publiées en novembre 1957 par l'Institut International du Froid, servirent de base aux discussions. Les travaux aboutirent à l'adoption d'un Projet de Recommandation ISO.

En mars 1967, ce Projet de Recommandation ISO (N° 1154) fut soumis à l'enquête de tous les Comités Membres de l'ISO. Il fut approuvé, sous réserve de quelques modifications d'ordre rédactionnel, par les Comités Membres suivants :

Allemagne	Grèce	Royaume-Uni
Australie	Hongrie	Suède
Belgique	Italie	Suisse
Canada	Nouvelle-Zélande	Tchécoslovaquie
Chili	Pays-Bas	U.S.A.
Danemark	Pologne	Yougoslavie
France	R.A.U.	

Aucun Comité Membre ne se déclara opposé à l'approbation du Projet.

Le Projet de Recommandation ISO fut alors soumis par correspondance au Conseil de l'ISO qui décida, en décembre 1968, de l'accepter comme RECOMMANDATION ISO.

* Bulletin IIF – 177 Boulevard Malesherbes, Paris 17e – Volume XXXVIII, N° 1.

Documents
Document Sharing Hub
Full document details: ISO_R 917_1968

CONTENTS

Page

Introduction 5

1. Scope 5

2. Definitions 5

PART I – DETERMINATION OF REFRIGERATING CAPACITY

3. General procedure 6

4. Basic test conditions and variations 8

5. Basis of calculations 8

6. Test report 8

7. Methods of test 10

8. Method A : Secondary fluid calorimeter 12

9. Method B : Flooded system refrigerant calorimeter 13

10. Method C : Dry system refrigerant calorimeter 16

11. Method D : Refrigerant vapour flow-meter 18

12. Method E : Refrigerant liquid quantity 20

13. Method F : Refrigerant liquid quantity and flow-meters 23

14. Method G : Water-cooled condenser method 24

15. Method H : Refrigerant vapour cooling method 27

16. Method J : Refrigerant vapour cooling method (alternative to Method H) 30

17. Method K : Calorimeter in compressor discharge line 32

PART II – POWER PERFORMANCE

18. Measurement of power absorbed 36

ANNEXES

Annex A : Types and accuracy of measuring instruments 37

Annex B : Symbols used in calculations 39

Annex C : Method of error estimation 42

FIGURES

Figures 1, 2 and 3 : Circuit diagrams for Methods A, B and C 11

Figure 4 : Circuit diagrams for Method D 19

Figures 5 and 6 : Circuit diagrams for Methods E and F 21

Figure 7 : Circuit diagrams for Method G 25

Figure 8 : Circuit diagram for Method H 27

Figure 9 : Circuit diagram for Method J 30

Figure 10 : Circuit diagrams for Method K 33

Documents
Document Sharing Hub

Full document details: ISO_R 917_1968

ISO Recommendation R 917 December 1968

TESTING OF REFRIGERANT COMPRESSORS

INTRODUCTION

This ISO Recommendation applies only to refrigerant compressors considered as separate units, independently of a complete refrigeration installation.

Selected methods of test are described for the determination of the refrigerating capacity and power performance factor of a refrigerant compressor, with sufficient accuracy to permit consideration of its suitability to operate satisfactorily under any set of basic test conditions required for a given refrigeration installation.

The methods for the determination of the refrigerating capacity are given in Part I.

The methods for the determination of the power performance factor are given in Part II.

Attention is particularly drawn to a number of special precautions to be taken in order to reduce testing losses to a minimum.

NOTE. – Tests on complete refrigeration installations are dealt with in ISO Recommendation R 916, *Testing of refrigerating systems.*

1. SCOPE

1.1 The provisions of this ISO Recommendation apply only to single stage refrigerant compressors of the positive volume displacement type. The methods of test described may however be used as a guide for the testing of other types of refrigerant compressors.

1.2 This ISO Recommendation applies only to tests carried out at the manufacturer's works, or wherever the necessary equipment for testing to the close limits required can be made available.

2. DEFINITIONS

A complete list of symbols and units used in calculation, together with their definitions, is given in Annex B.

2.1 *Refrigerating capacity of a refrigerant compressor.* Product of the mass flow rate of refrigerant through the compressor, as derived from the test, and the difference between the specific enthalpy of the refrigerant in its state at the measuring point at inlet of the compressor, and the specific enthalpy in the state of saturated liquid at the temperature corresponding to the test discharge pressure at the measuring point at outlet of the compressor.

2.2 *Refrigerating performance factor.* Ratio of refrigerating capacity to power supplied.

NOTE. – It should be made clear whether the power referred to is measured at the compressor shaft, or is power supplied at the motor terminals.

AVA Documents
Document Sharing Hub

Full document details: ISO_R 917_1968

PART I

DETERMINATION OF REFRIGERATING CAPACITY

3. GENERAL PROCEDURE

3.1 Determination of refrigerating capacity

The determination of the refrigerating capacity of a compressor comprises

(*a*) the evaluation of the mass flow rate of the refrigerant, obtained for each method used by means of the apparatus inserted in the outer part of the test circuit, between the inlet and the outlet of the compressor, as described in sections 8 to 18;

(*b*) the determination of the specific enthalpy of the refrigerant in the state of saturated liquid at the compressor discharge pressure, and its specific enthalpy at the compressor suction pressure and temperature, obtained by means of tables or diagrams of the characteristics of the refrigerant.

During the test, the refrigerant compressor should be provided with all auxiliary equipment and accessories necessary for its satisfactory operation in normal use.

3.2 Tests

The tests comprise a PRINCIPAL test and a CONFIRMING test which should be carried out simultaneously.

3.2.1 The CONFIRMING test should, wherever possible, be of a different type from the PRINCIPAL test, so that its results are obtained independently from those of the PRINCIPAL test.

3.2.2 The value of the estimated error for the refrigerating capacity, as calculated for the PRINCIPAL test, should be lower than that calculated from the selected CONFIRMING test (see Annex C).

3.2.3 Recommended methods for both types of tests and for possible combinations are given in section 7.

3.2.4 The results of the PRINCIPAL test are accepted provided that those of the CONFIRMING test are in agreement to within ± 4 %.

3.3 General rules

In order to ensure that the results obtained are within the required limits of accuracy, it is essential to observe the following rules and to take into account the instructions given in the Note under clause 3.3.4.

3.3.1 All instruments and auxiliary measuring apparatus should have been correctly located in relation to the compressor inlet and outlet, and should have been calibrated against master instruments of certified accuracy and adjusted if necessary to give readings within the limits of accuracy prescribed in Annex A.

3.3.2 Pressure and temperature at suction inlet to the compressor should both be measured at the same point and as nearly as possible eight pipe diameters of a straight run of pipeline, or 300 mm (12 in), whichever is greater, ahead of the point of entry or of the stop valve, if one is fitted.

3.3.3 Pressure and temperature at the discharge outlet of the compressor should both be measured at the same point and not less than eight pipe diameters of a straight run of pipeline, or 300 mm (12 in), whichever is greater, after the point of outlet or the stop valve, if one is fitted.

AVA Documents
Document Sharing Hub

Full document details: ISO_R 917_1968

3.3.4 The correct refrigerant and lubricating oil charges should be in the circulation system. Efficient oil separators should be fitted in the discharge line of the compressor, and arrangements made to return separated oil direct to the compressor lubricating system.

If the compressor is designed for use on a normal oil returning circuit, the oil from the separator should be returned to the suction line between the measuring apparatus and the compressor suction connection.

No refrigerant should be added during the test, and no oil should be added to enclosed crank cases which communicate with the refrigerant circuit.

During the whole of the test run, the circuit should contain only the refrigerant and the lubricating oil in such conditions of purity that normal operation in the continuous running of the compressor will be assured, and that the precision of the test measurements will not be affected within the agreed tolerances.

NOTE. – The complete elimination of liquid refrigerant and lubricating oil would be difficult to achieve. However, the error arising from these factors at inlet of the compressor can generally be reduced to such an extent as to be negligible by

(*a*) ensuring that the refrigerant vapour is sufficiently superheated at inlet to the compressor. For this purpose a suction superheater may be required, and any heat supplied to it from an external source should be duly recorded;

(*b*) providing an efficient oil separator on the discharge line of the compressor.

In general, a correction for the effect of lubricating oil is not necessary if the oil content of the oil/liquid refrigerant mixture, determined in the manner described in clause 12.3.3, is such as to cause an error not exceeding 1 % of the refrigerating capacity.

3.3.5 The system should be tested for tightness, and all non-condensable gases should be eliminated.

3.3.6 The compressor should be protected against abnormal air currents.

3.4 Test period

3.4.1 The tests envisaged refer exclusively to refrigerant compressors operating continuously under conditions such that, for a specified period, fluctuations in all the factors likely to affect the results of a test remain between the limits prescribed, and show no definite tendency to move outside these limits.

These conditions are termed *steady working conditions.*

3.4.2 After the compressor has been started, adjustments should be made during a *preliminary* run until the essential measurements required for the test are within the allowable limits of variation.

3.4.3 The steady working conditions having been reached, the readings for the test period are taken at equal time intervals not exceeding 20 minutes, for a period of at least 1 hour during which at least four readings are taken and plotted as a curve.

Only minor adjustments are permitted during this period.

The use of recording instruments of accuracy compatible with the accuracy of the method used is recommended.

3.4.4 The arithmetic mean of the successive readings for each measurement is taken as the value of the measurement for the test.

3.4.5 Quantity measurements should be made at the beginning and end of each interval to check uniformity of operation, the difference between the first and last measurement of the test period being taken as the value for the test.

AVA Documents
Document Sharing Hub

Full document details: ISO_R 917_1968

4. BASIC TEST CONDITIONS AND VARIATIONS

The basic test conditions to be specified for the testing of a refrigerant compressor are as follows :

4.1 The absolute pressure at the measuring points in the suction and discharge pipeline of the compressor. The pressure readings should not vary by more than ± 1 % throughout the test period.

4.2 The suction temperature at the measuring point in the suction pipeline of the compressor. The temperature readings should not vary by more than ± 3 °C (± 5 °F) throughout the test period.

4.3 The speed of rotation of the compressor. The speed selected for the test should not differ by more than ± 10 % from the basic speed.

or

The voltage at the motor terminals and the frequency. The voltage should be within ± 2 % of the name-plate value and the frequency within ± 2 %.

5. BASIS OF CALCULATIONS

5.1 Specific enthalpy

Subject to the rules and precautions defined under clause 3.3, the specific enthalpy of the refrigerant liquid at compressor discharge pressure, and the specific enthalpy at compressor suction pressure and temperature, are obtained from recognized tables and diagrams of the thermodynamic properties of the refrigerant used. A correction for the presence of entrained lubricating oil may be necessary in the second case (see clause 12.3.3).

5.2 Mass flow rate of refrigerant

The mass flow rate is determined by a PRINCIPAL method selected from those described under sections 8 to 17, and confirmed by a suitable CONFIRMING test, the tests being carried out simultaneously (see section 7).

5.3 Specific volume of the refrigerant

The actual test value v_{ga} of the specific volume of the refrigerant vapour at compressor inlet should not differ by more than 2 % from the value v_{g_1} corresponding to the specified basic test conditions.

5.4 Value of the measured mass flow rate

Subject to the condition in clause 5.3, the value of the measured mass flow rate should be adjusted by multiplying it by the factor v_{ga}/v_{g_1}.

6. TEST REPORT

6.1 General information

6.1.1 Date . . . . . Time started . . . . . .
Time ended . . . . . .
Duration . . . . . .

6.1.2 Make and serial number of compressor.

AVA Documents
Document Sharing Hub

Full document details: ISO_R 917_1968

6.1.3 Type of compressor (single or double acting, number of cylinders, etc.).

6.1.4 Cylinder diameter and stroke (if applicable).

6.1.5 Compressor displacement per revolution.

6.1.6 Designation of refrigerant.

6.2 **Basic test conditions to be specified** (see section 4)

6.2.1 Absolute pressure at compressor suction.

6.2.2 Temperature at compressor suction.

6.2.3 Absolute pressure at compressor discharge.

6.2.4 Rotational speed of compressor or electric supply details.

6.3 **Methods of test used**

6.3.1 PRINCIPAL test.

6.3.2 CONFIRMING test.

6.4 **Average values of test readings** (see section 3)

6.4.1 Rotational speed of compressor.

6.4.2 Ambient temperature.

6.4.3 Barometer reading.

6.4.4 Pressure of refrigerant at compressor suction inlet.

6.4.5 Temperature of refrigerant at compressor suction inlet.

6.4.6 Pressure of refrigerant at compressor discharge outlet.

6.4.7 Temperature of refrigerant at compressor discharge outlet.

6.4.8 Inlet temperature of cooling water.

6.4.9 Outlet temperature of cooling water.

6.4.10 Mass flow rate of cooling water.

6.4.11 When possible, compressor lubricating oil temperature.

6.4.12 Voltage and frequency of electrical supply.

NOTE. – Additional test information will be required depending on the methods of test used (see sections 8 to 18).

6.5 **Test results**

6.5.1 Heat leakage factors.

6.5.2 Mass flow rate of refrigerant.

6.5.3 Relevant enthalpy difference.

6.5.4 Refrigerating capacity of compressor.

6.5.5 Estimated error of results (see Annex C).

6.5.6 Remarks.

NOTE. – If the test is to include the measurement of power performance, the readings required in accordance with Part II should be taken simultaneously with those of Part I.

AVA Documents
Document Sharing Hub

Full document details: ISO_R 917_1968

7. METHODS OF TEST

7.1 **Method A** (see section 8) : Secondary fluid calorimeter in *suction* line.

Method B (see section 9) : Flooded system refrigerant calorimeter in *suction* line.

Method C (see section 10) : Dry system refrigerant calorimeter in *suction* line.

A heat-insulated calorimeter is installed near the suction inlet of the compressor to act as the evaporator, and the refrigerating effect is produced by the direct transfer of heat to the refrigerant from a suitable controlled source.

NOTE. – Methods A, B and C should, wherever possible, be used as PRINCIPAL METHODS.

7.2 **Method G** (see section 14) : Water-cooled condenser method.

The water-cooled condenser in the actual installation is suitably insulated and equipped to act as a calorimeter.

7.3 **Method K** (see section 17) : Calorimeter in discharge line.

A heat-insulated calorimeter is installed in the discharge pipeline of the compressor to receive the total flow of refrigerant in the gaseous state.

7.4 **Method D** (see section 11) : Refrigerant vapour flow-meter.

A flow-meter of the calibrated orifice or nozzle type is placed in *either* the compressor suction *or* the compressor discharge line.

7.5 **Method E** (see section 12) : Refrigerant liquid quantity meter.

Method F (see section 13) : Refrigerant liquid flow rate meter.

Method H (see section 15) : Refrigerant vapour cooling.

Method J (see section 16) : Alternative to Method H.

Methods E and F measure the *total* flow of the refrigerant in the *liquid* state.

Methods H and J measure the flow of *a portion only* of the *liquid* refrigerant obtained from a special condenser.

Methods G, K, D, E, F, H and J should in general be used as CONFIRMING METHODS. However, in cases where it is not practicable to employ Methods A, B and C as PRINCIPAL METHODS, it is permissible to make use of Methods D, G and K for this purpose provided the total mass flow passes through the measuring apparatus, and the special precautions referred to under clause 3.3 are strictly observed.

7.6 **Possible combinations**

The following combinations of PRINCIPAL METHODS and CONFIRMING METHODS are possible, taking into account the conditions set out under clause 3.2.

PRINCIPAL METHOD	POSSIBLE CONFIRMING METHOD
Method A	E, F, G, K
Method B	E, F, G, K
Method C	E, F, G, K
Method D	H, J, G, K
Method G	E, F, K
Method K	E, F, G, H, J

AVA Documents
Document Sharing Hub

Full document details: ISO_R 917_1968

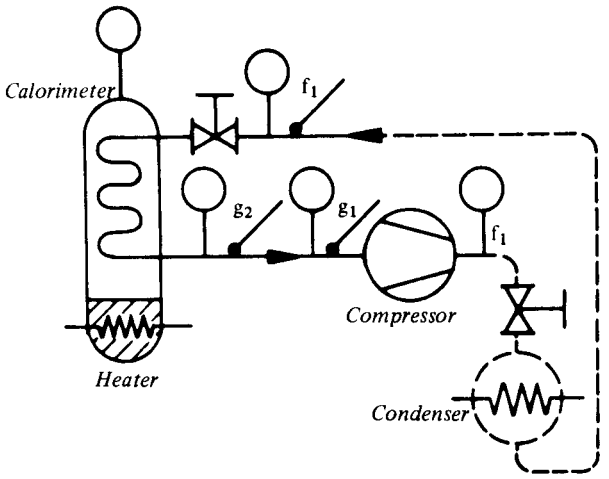

FIG. 1 – **Method A**

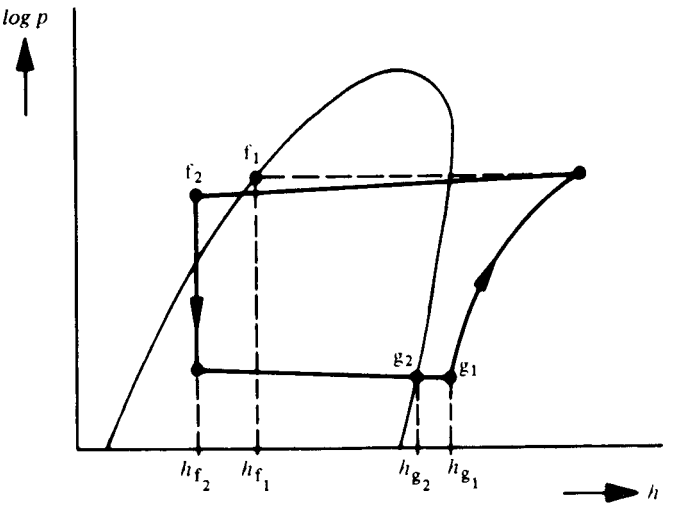

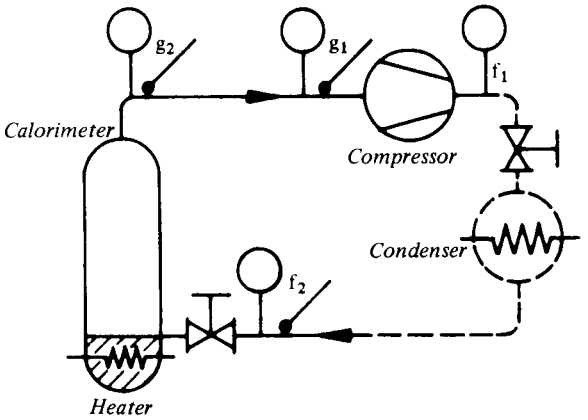

FIG. 2 – **Method B**

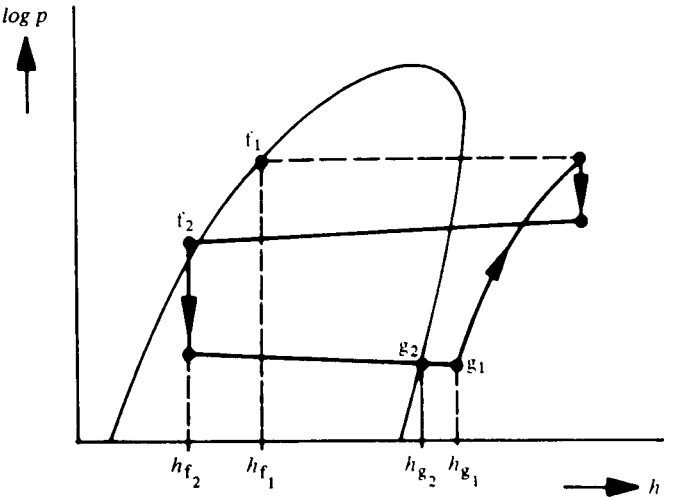

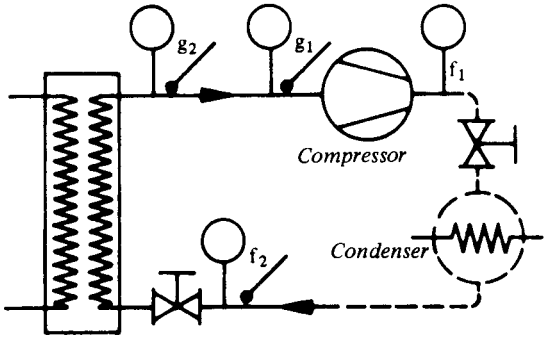

FIG. 3 – **Method C**

Circuit diagrams for Methods A, B and C

AVA Documents
Document Sharing Hub
Full document details: ISO_R 917_1968

8. METHOD A : SECONDARY FLUID CALORIMETER (see Fig. 1)

8.1 Description

The secondary fluid calorimeter consists of a direct expansion coil or set of coils in parallel serving as a primary evaporator. This evaporator is suspended in the upper part of a pressure-tight heat-insulated vessel. A heater is located in the base of this vessel, which is charged with a volatile secondary fluid so that the heater is well below the liquid surface. The refrigerant flow is controlled by either a hand regulator or a constant pressure expansion valve, which should be located close to the calorimeter. The expansion valve and the refrigerant pipelines connecting it to the calorimeter may be insulated in order to minimize the gain of heat.

The calorimeter is insulated in such a manner that the heat leakage does not exceed 5 % of the capacity of the compressor.

Provision should be made for measuring the pressure of the secondary fluid with an accuracy of ± 0.05 kgf/cm^2 (± 0.7 lbf/in^2) and for ensuring that this pressure does not exceed the safety limit for the apparatus.

8.2 Calibration

The calorimeter should be calibrated by the following heat loss method :

8.2.1 The heat input to the secondary fluid is adjusted so as to maintain the pressure constant at a value corresponding to a temperature of saturation approximately 14 °C (25 °F) above the ambient air temperature. The ambient air temperature is maintained constant to within ± 1 °C (± 2 °F) at any desired value not exceeding 43 °C (110 °F).

8.2.2 If the heater is operated continuously, the heat input is maintained constant to within ± 1 % and the pressure of the secondary fluid is measured at hourly intervals until four successive values of the corresponding temperature of saturation do not vary by more than ± 0.6 °C (± 1 °F).

8.2.3 If the heater is operated intermittently, the control should be such that the temperature of saturation corresponding to the secondary fluid pressure is maintained constant to within ± 0.6 °C (± 1 °F) of the desired value and readings of heat input are taken at hourly intervals until four successive readings do not vary by more than ± 4 %.

8.2.4 The heat leakage factor can then be calculated from the following formula :

$$F_l = \frac{\Phi_h}{t_p - t_a}$$

8.3 Test procedure

The suction pressure is adjusted by means of the refrigerant control, and the temperature of the refrigerant vapour entering the compressor is adjusted by varying the heat input to the secondary fluid. The discharge pressure is adjusted by varying the temperature and flow of the condensing medium, or by a pressure control device in the discharge line.

8.3.1 If the heater is operated continuously, the fluctuation in heat input due to any cause during the test period should not be such as to cause a variation of more than 1 % in the calculated compressor capacity.

8.3.2 If the heater is operated intermittently, the temperature of saturation corresponding to the secondary fluid pressure should not vary by more than ± 0.6 °C (± 1 °F).

AVA Documents
Document Sharing Hub

Full document details: ISO_R 917_1968

8.4 Additional information

The following information should be recorded :

8.4.1 Pressure of refrigerant vapour at evaporator outlet.

8.4.2 Temperature of refrigerant vapour at evaporator outlet.

8.4.3 Pressure of refrigerant liquid entering expansion valve.

8.4.4 Temperature of refrigerant liquid entering expansion valve.

8.4.5 Ambient temperature at calorimeter.

8.4.6 Pressure of secondary fluid.

8.4.7 Heat input to secondary fluid.

8.5 Determination of refrigerating capacity

8.5.1 The mass flow rate of the refrigerant, as determined by the test, is given by the following formula :

$$m_f = \frac{\Phi_i + F_t (t_a - t_s)}{h_{g_2} - h_{f_2}}$$

8.5.2 The refrigerating capacity, adjusted to the specified basic test conditions, is given by the following formula :

$$\Phi_o = m_f (h_{g_1} - h_{f_1}) \frac{v_{ga}}{v_{g_1}}$$

9. METHOD B : FLOODED SYSTEM REFRIGERANT CALORIMETER (see Fig. 2)

9.1 Description

The flooded system refrigerant calorimeter consists of a pressure-tight evaporator vessel, or vessels in parallel, in which heat is applied direct to the refrigerant in respect of which the compressor is being tested. The refrigerant flow is controlled by a hand regulator, a constant pressure expansion valve, or a suitable level control device, which should be located close to the calorimeter. The expansion valve and the refrigerant pipeline connecting it to the calorimeter may be insulated in order to minimize the gain of heat.

The calorimeter should be insulated in such a manner that the heat leakage does not exceed 5 % of the capacity of the compressor.

Provision should be made for ensuring that the refrigerant pressure does not exceed the safety limit for the apparatus.

AVA Documents
Document Sharing Hub

Full document details: ISO_R 917_1968

9.2 Calibration

The calorimeter should be calibrated by one of the following methods :

9.2.1 *Heat loss method.* The heat loss method of calibration is carried out by means of the following procedure :

9.2.1.1 The calorimeter is filled with refrigerant liquid to its normal operating level and the liquid and vapour outlet stop valves closed. The ambient temperature is maintained constant to within ± 1 °C (± 2 °F) at any desired value not exceeding 43 °C (110 °F) and heat is supplied to maintain the refrigerant temperature approximately 14 °C (25 °F) above the ambient temperature. Where liquid is used for heating, the inlet temperature is maintained constant to within ± 0.3 °C (± 0.5 °F) and the flow controlled so that the temperature drop is not less than 6 °C (10 °F). Where electric heating is used, the input is maintained constant to within ± 1 %.

9.2.1.2 After thermal equilibrium has been established, readings are taken for the following periods :

– *for liquid heating,* at hourly intervals until four successive readings of both inlet and outlet temperatures, with constant rate flow, do not vary by more than ± 0.3 °C (± 0.5 °F);

– *for electric heating,* at hourly intervals until four successive values of the temperature of saturation of the refrigerant do not vary by more than ± 0.6 °C (± 1 °F).

9.2.1.3 The heat input to the calorimeter is determined as follows :

– *for liquid heating*

$$\Phi_i = c\,(t_1 - t_2)\,m_l$$

– *for electric heating*

$$\Phi_i = P\ \mathrm{W} = 0.86\,P\ \mathrm{kcal/h} = 3.41\,P\ \mathrm{Btu/h}$$

9.2.1.4 The heat leakage factor can then be calculated from the following formula :

$$F_l = \frac{\Phi_i}{t_r - t_a}$$

9.2.2 *Condensing unit method.* The condensing unit method of calibration is carried out by means of the following procedure :

The ambient temperature of the calorimeter is maintained constant to within ± 1 °C (± 2 °F) at any desired value not exceeding 43 °C (110 °F). A condensing unit of appropriate capacity is operated on the calorimeter until steady conditions are reached with a temperature difference between the ambient temperature and the temperature of saturation of the refrigerant of 22 ± 1 °C (40 ± 2 °F). The condensate is collected and measured in volume measuring vessels by the procedure described in Method E (see section 12) over such a period of time as to ensure that the height of the liquid accumulated in the measuring vessel is at least 150 mm (6 in). The test is continued until four successive readings taken at hourly intervals do not vary by more than ± 5 %.

The heat leakage factor can then be calculated from the following formula :

$$F_l = \frac{(h_{g_2} - h_{f_2})\,m_f}{t_a - t_r}$$

AVA Documents
Document Sharing Hub

Full document details: ISO_R 917_1968