TECHNICAL REPORT

ISO/TR 8124-9

Second edition
2020-03

Safety of toys —

Part 9: Safety aspects related to mechanical and physical properties — Comparison of ISO 8124-1, EN 71-1 and ASTM F963

Sécurité des jouets —

Partie 9: Aspects de sécurité relatifs aux propriétés mécaniques et physiques — Comparaison entre l'ISO 8124-1, l'EN 71-1 et l'ASTM F963

Reference number
ISO/TR 8124-9:2020(E)

Documents
Document Sharing Hub
© ISO 2020

Full document details: ISO TR 08124-9-2020

COPYRIGHT PROTECTED DOCUMENT

© ISO 2020

All rights reserved. Unless otherwise specified, or required in the context of its implementation, no part of this publication may be reproduced or utilized otherwise in any form or by any means, electronic or mechanical, including photocopying, or posting on the internet or an intranet, without prior written permission. Permission can be requested from either ISO at the address below or ISO's member body in the country of the requester.

ISO copyright office
CP 401 • Ch. de Blandonnet 8
CH-1214 Vernier, Geneva
Phone: +41 22 749 01 11
Fax: +41 22 749 09 47
Email: copyright@iso.org
Website: www.iso.org

Published in Switzerland

© ISO 2020 – All rights reserved

Documents
Document Sharing Hub

Full document details: ISO TR 08124-9-2020

Contents

Page

Foreword ... **vii**
Introduction ... **viii**
1 Scope ... **1**
2 Normative references ... **1**
3 Terms and definitions ... **1**
4 Comparison of scopes ... **1**
5 Comparison of terms and definitions ... **5**
5.1 General ... 5
5.2 Analysis of the main differences between the terms and definitions ... 8
5.2.1 Aquatic toy ... 8
5.2.2 Asphyxiation and choking ... 9
5.2.3 Ball ... 9
5.2.4 Close-to-the-ear toy ... 9
5.2.5 Cord ... 10
5.2.6 Elastic ... 10
5.2.7 Hand-held toy ... 11
5.2.8 Hazard ... 11
5.2.9 Large and bulky toy ... 11
5.2.10 Marble ... 12
5.2.11 Paper ... 12
5.2.12 Pompom ... 13
5.2.13 Projectile ... 13
5.2.14 Projectile toy with stored energy ... 14
5.2.15 Protective cap, protective cover or protective tip ... 14
5.2.16 Pull or push toy ... 15
5.2.17 Rattle ... 15
5.2.18 Toy scooter ... 16
5.2.19 Squeeze toy ... 16
6 Comparison of requirements ... **17**
6.1 General ... 17
6.2 Normal use ... 17
6.3 Reasonably foreseeable abuse ... 18
6.4 Material ... 22
6.4.1 Fillings ... 23
6.4.2 Expanding materials ... 23
6.4.3 Glass and porcelain ... 24
6.5 Small parts ... 25
6.5.1 General ... 25
6.5.2 Small parts exemptions ... 25
6.5.3 Test methods ... 26
6.6 Shape, size and strength of certain toys ... 27
6.6.1 General ... 27
6.6.2 Squeeze toys, rattles and certain other toys ... 28
6.6.3 Small balls ... 29
6.6.4 Pompoms ... 30
6.6.5 Toy pacifiers ... 30
6.6.6 Balloons ... 30
6.6.7 Marbles ... 30
6.6.8 Hemispheric-shaped toys ... 31
6.6.9 Suction cups ... 32
6.6.10 Test templates ... 32
6.7 Edges ... 33

AVA Documents
Document Sharing Hub

© ISO 2020 – All rights reserved

Full document details: ISO TR 08124-9-2020

6.7.1 General 33
6.7.2 Age range for application of the functional sharp edge exemption 34
6.7.3 Toys assembled by adults 34
6.7.4 Test method 34
6.8 Points 35
6.8.1 General 35
6.8.2 Age range for application of the functional sharp point exemption 36
6.8.3 Electrical conductors 36
6.8.4 Examples of accessible, potentially hazardous sharp points 36
6.8.5 Test method 36
6.9 Projections 36
6.9.1 General 36
6.9.2 Ends of rigid handlebars 37
6.9.3 Age grade 37
6.9.4 Bath toy projections 37
6.9.5 Protective components 37
6.10 Metal wires and rods 37
6.10.1 General 37
6.10.2 Scope of the metal wires and rods flexure test 38
6.10.3 Metal wire flexure test methods 38
6.11 Plastic film or plastic bags in packaging and in toys 39
6.11.1 General 39
6.11.2 Scope of plastic film or plastic bags in packaging and in toys 39
6.11.3 Minimum sheet thickness 39
6.11.4 Thickness of plastic balloons 40
6.11.5 Detached plastic sheeting 40
6.11.6 Perforated plastic film 40
6.11.7 Determination of plastic sheet area 40
6.12 Cords 40
6.12.1 General 40
6.12.2 Length of cords, loops, nooses and tangled loops 42
6.12.3 Diameter of certain cords intended for children under 36 months 46
6.12.4 Self-retracting cords 46
6.12.5 Toys attached to or intended to be strung across, or otherwise attached to a cradle, cot, perambulator or carriage 47
6.12.6 Cords on pull toys 48
6.12.7 Cords on toy bags 48
6.12.8 Cords, strings and lines for flying toys 49
6.12.9 Electrical cables 49
6.12.10 Cord warning 50
6.12.11 Test methods and equipment 50
6.12.12 Toy disguise costumes 52
6.13 Folding mechanisms 52
6.13.1 General 52
6.13.2 Hinge line clearance 53
6.13.3 Toy pushchairs, perambulators and similar toys 54
6.13.4 Requirement for folding devices having a scissor-like action 56
6.14 Holes, clearances and accessibility of mechanisms 56
6.14.1 General 56
6.14.2 Holes, clearances and accessibility of mechanisms 56
6.14.3 Accessible clearances for moveable segments 56
6.14.4 Chains or belts in ride-on toys 57
6.14.5 Other driving mechanisms 57
6.14.6 Winding keys 57
6.14.7 Toy bicycles and tricycles provided with a handle that can be used for pushing the child 57
6.15 Springs 58
6.16 Stability and overload requirements 58

© ISO 2020 – All rights reserved
Documents
Document Sharing Hub
Full document details: ISO TR 08124-9-2020

6.16.1 Stability requirements for ride-on toys and seats ... 58
6.16.2 Overload requirements for ride-on toys and seats ... 62
6.16.3 Stability of stationary floor toys ... 64
6.17 Enclosures ... 65
6.17.1 General ... 65
6.17.2 Impermeable material ... 65
6.17.3 Ventilation ... 66
6.17.4 Closures ... 66
6.17.5 Toy chests safety labelling ... 66
6.18 Simulated protective equipment, such as helmets, hats and goggles ... 67
6.19 Projectile toys ... 67
6.19.1 General ... 67
6.19.2 General requirements of projectiles ... 69
6.19.3 Projectile range ... 69
6.19.4 Impact surface ... 69
6.19.5 Discharge mechanism ... 71
6.19.6 Kinetic energy and warning ... 74
6.19.7 Toy catapults and projectiles propelled by an elastic band and projectile toys without stored energy where the discharge mechanism can store energy, only when held in place by the user ... 75
6.19.8 Dart ... 75
6.19.9 Mouth-actuated projectile toys ... 76
6.19.10 Test method ... 76
6.20 Rotors and propellers ... 76
6.20.1 General ... 76
6.20.2 Scope and exemption ... 77
6.20.3 Leading part(s) on rigid parts of flying toys ... 77
6.20.4 Examples of designs to minimize the risk potential of rotating blades ... 77
6.20.5 Rotor or propeller warning ... 78
6.20.6 Rotors and propellers on remote controlled flying toys ... 79
6.21 Aquatic toys ... 79
6.22 Braking ... 80
6.22.1 General ... 80
6.22.2 Braking device — exemptions ... 81
6.22.3 Braking device – requirements ... 81
6.22.4 Free-wheeling facility ... 81
6.22.5 Brake performance test ... 81
6.23 Toy bicycles ... 82
6.23.1 General ... 82
6.23.2 Braking system ... 82
6.23.3 Warning ... 83
6.24 Speed limitation of electrically driven ride-on toys ... 83
6.24.1 General ... 83
6.24.2 Seat requirements ... 83
6.24.3 Determination of maximum design speed of electrically driven ride-on toys ... 83
6.25 Toys containing a heat source ... 85
6.25.1 General ... 85
6.25.2 Exemption for toys containing a heat source ... 85
6.25.3 Scope of toys containing a heat source ... 85
6.25.4 Temperature rise for heat sources ... 85
6.25.5 Test environment for toys containing a heat source ... 86
6.26 Liquid-filled toys ... 86
6.27 Mouth-actuated toys ... 86
6.28 Toy roller skates, toy inline skates and toy skateboards ... 87
6.29 Percussion caps ... 87
6.30 Acoustic requirements ... 88
6.30.1 General ... 88
6.30.2 Scope for the acoustic ... 88

AVA Documents
Document Sharing Hub

© ISO 2020 – All rights reserved

Full document details: ISO TR 08124-9-2020

6.30.3 Category of acoustic toys ... 89
6.30.4 Rattles ... 89
6.30.5 Comparison of the acoustic requirements ... 89
6.30.6 Test method ... 89
6.31 Toy scooters ... 91
6.31.1 General ... 91
6.31.2 Comparison of toy scooter requirements ... 92
6.32 Magnets and magnetic components ... 92
6.33 Yo-yo balls ... 95
6.34 Straps intended to be worn fully or partially around the neck ... 96
6.35 Sledges and toboggans with cords for pulling ... 96
6.36 Jaw entrapment in handles and steering wheels ... 97
6.37 Toy gun markings (refer to ISO 8124-1:2018, Annex D) ... 97
6.38 Toys attached to food (refer to ISO 8124-1:2018, B.2.8) ... 97
6.39 Toys comprising monofilament fibres which may present long hair hazards (refer to ISO 8124-1:2018) ... 97
6.40 Packaging and packaging components (spherical, egg-shaped or ellipsoidal, and hemispheric-shaped containers) ... 98

Annex A (informative) **Index of requirements in EN 71-1** ... **99**

Annex B (informative) **Index of requirements in ASTM F963** ... **112**

Annex C (informative) **Significant editorial and technical changes to the previous version of this document** ... **122**

Bibliography ... **124**

© ISO 2020 – All rights reserved

Documents
Document Sharing Hub
Full document details: ISO TR 08124-9-2020

Foreword

ISO (the International Organization for Standardization) is a worldwide federation of national standards bodies (ISO member bodies). The work of preparing International Standards is normally carried out through ISO technical committees. Each member body interested in a subject for which a technical committee has been established has the right to be represented on that committee. International organizations, governmental and non-governmental, in liaison with ISO, also take part in the work. ISO collaborates closely with the International Electrotechnical Commission (IEC) on all matters of electrotechnical standardization.

The procedures used to develop this document and those intended for its further maintenance are described in the ISO/IEC Directives, Part 1. In particular, the different approval criteria needed for the different types of ISO documents should be noted. This document was drafted in accordance with the editorial rules of the ISO/IEC Directives, Part 2 (see www.iso.org/directives).

Attention is drawn to the possibility that some of the elements of this document may be the subject of patent rights. ISO shall not be held responsible for identifying any or all such patent rights. Details of any patent rights identified during the development of the document will be in the Introduction and/or on the ISO list of patent declarations received (see www.iso.org/patents).

Any trade name used in this document is information given for the convenience of users and does not constitute an endorsement.

For an explanation of the voluntary nature of standards, the meaning of ISO specific terms and expressions related to conformity assessment, as well as information about ISO's adherence to the World Trade Organization (WTO) principles in the Technical Barriers to Trade (TBT) see www.iso.org/iso/foreword.html.

This document was prepared by Technical Committee ISO/TC 181, *Safety of toys*.

This second edition cancels and replaces the first edition (ISO/TR 8124-9:2018), which has been technically revised. The main changes to the previous edition are detailed in Annex C.

A list of all parts in the ISO 8124 series can be found on the ISO website.

Any feedback or questions on this document should be directed to the user's national standards body. A complete listing of these bodies can be found at www.iso.org/members.html.

© ISO 2020 – All rights reserved

Documents
Document Sharing Hub
Full document details: ISO TR 08124-9-2020

Introduction

The purpose of this document is to compare and contrast the identified versions of ASTM F963:2017, EN 71-1:2014+A1:2018 and ISO 8124-1:2018. This document focuses on the contents of these three referenced standards as they relate to mechanical and physical properties including scope, definitions, general requirements, warnings and test methods.

For ease of use and readability, ISO 8124-1:2018, Clause 4 is listed in Clause 6 of this document. For example, ISO 8124-1:2018, 4.3 relates to 6.4 of this document.

This document is an overview and, therefore, does not cover the entirety of all the differences between ISO 8124-1, ASTM F963 and EN 71-1. In addition, this document is not to be relied on to fully understand conformity with any of the referenced standards or the requirements within them. In the case of any discrepancies in the comparisons presented, please refer to the relevant clauses of the referenced standards.

The index of requirements in EN 71-1 is given in Annex A.

The index of requirements in ASTM F963 is given in Annex B.

© ISO 2020 – All rights reserved
Documents
Document Sharing Hub
Full document details: ISO TR 08124-9-2020

Safety of toys —

Part 9: Safety aspects related to mechanical and physical properties — Comparison of ISO 8124-1, EN 71-1 and ASTM F963

1 Scope

This document consists of a comparison of the mechanical and physical requirements covered by the following toy safety standards:

a) ISO: ISO 8124-1:2018;

b) Europe (CEN): EN 71-1:2014+A1:2018;

c) USA: ASTM F963:2017.

2 Normative references

There are no normative references in this document.

3 Terms and definitions

No terms and definitions are listed in this document.

ISO and IEC maintain terminological databases for use in standardization at the following addresses:

— ISO Online browsing platform: available at https://www.iso.org/obp

— IEC Electropedia: available at http://www.electropedia.org/

4 Comparison of scopes

The scope of applicable toy products covered by the referenced standards is generally similar, as shown in Table 1.

© ISO 2020 – All rights reserved

Documents
Document Sharing Hub
Full document details: ISO TR 08124-9-2020

Table 1 — Scope

ISO 8124-1	EN 71-1	ASTM F963
The requirements in this document apply to all toys, i.e. any product or material designed or clearly intended for use in play by children under 14 years of age	This European Standard applies to toys for children, toys being any product or material designed or intended, whether or not exclusively, for use in play by children of less than 14 years *NOTE "The words "whether or not exclusively" have been added to the definition to indicate that the product does not have to be exclusively intended for playing purposes in order for it to be considered as a toy, but it can have other functions as well. For example, a key-ring with a teddy bear attached to it is considered as a toy, or a sleeping bag in the shape of a soft filled toy"*	This specification covers requirements and contains test methods for toys intended for use by children under 14 years of age

Table 2 illustrates the differences in the product types which are exempted from the scope of each standard.

Table 2 — Exemptions

ISO 8124-1	EN 71-1	ASTM F963
Bicycles, except for those considered to be toys, i.e. those having a maximum saddle height of 435 mm	Bicycles with a maximum saddle height of more than 435 mm, measured as the vertical distance from the ground to the top of the seat surface, with the seat in a horizontal position and with the seat pillar set to the minimum insertion mark (see Note 1)	Bicycles
Slingshots	Toy slings and toy catapults, supplied without projectiles. (see Note 2) Toy slings and toy catapults supplied with projectiles are covered by this standard	Sling shots
Darts with metal points	Products and games using sharp-pointed missiles, such as sets of darts with metallic points (see Note 1)	Sharp-pointed darts
Home and public playground equipment	Playground equipment intended for public use (see Note 2)	Playground equipment
Compressed air- and gas-operated guns and pistols	Guns and pistols using compressed gas, with the exception of water guns and water pistols (see Note 1)	Non-powder guns
NOTE 1 For the purpose of EN 71-1, these product types are not considered as toys. There are guidance documents issued by CEN to assist in the classification of toys. NOTE 2 EN 71-1 does not apply to these toys.		

© ISO 2020 – All rights reserved
Documents
Document Sharing Hub
Full document details: ISO TR 08124-9-2020

Table 2 *(continued)*

ISO 8124-1	EN 71-1	ASTM F963
Kites (except for the electric resistance of their strings, which is included)	—	Kites (except for electric resistance of kite strings and handheld lines over 6 ft (1,8 m) long, attached to flying devices intended for use as playthings)
Model kits, hobby and craft items, in which the finished item is not primarily of play value	—	Hobby and craft items in which the finished item is not primarily of play value Model kits in which the finished item is not primarily of play value
Sporting goods and equipment, camping goods, athletic equipment, musical instruments and furniture; however, toys which are their counterparts are included	—	Sporting goods, camping goods, athletic equipment, musical instruments, juvenile products, and furniture However, toys that are their counterparts are covered
Models of aircraft, rockets, boats and land vehicles powered by combustion engines; however, toys which are their counterparts are included	Toy vehicles equipped with combustion engines (see Note 2)	Powered models of aircraft, rockets, boats, and land vehicles; however, toys that are their counterparts are covered
Collectible products not intended for children under 14 years of age	Products for collectors, provided that the product or its packaging bears a visible and legible indication that it is intended for collectors of 14 years of age and above Examples of this category are: — detailed and faithful scale models — kits for the assembly of detailed — scale models — folk dolls and decorative dolls and other similar articles — historical replicas of toys	—
Holiday decorations that are primarily intended for ornamental purposes	Decorative objects for festivities and celebrations (see Note 1)	—
Aquatic equipment intended to be used in deep water, swimming-learning devices and flotation aids for children such as swim-seats and swim-aids	Aquatic equipment intended to be used in deep water, and swimming learning devices for children, such as swim seats and swimming aids (see Note 1)	—
NOTE 1 For the purpose of EN 71-1, these product types are not considered as toys. There are guidance documents issued by CEN to assist in the classification of toys. NOTE 2 EN 71-1 does not apply to these toys.		

© ISO 2020 – All rights reserved

Documents
Document Sharing Hub
Full document details: ISO TR 08124-9-2020

Table 2 *(continued)*

ISO 8124-1	EN 71-1	ASTM F963
Toys installed in public places (e.g. arcades and shopping centres)	Automatic playing machines, whether coin operated or not, intended for public use (see Note 2)	—
Puzzles having more than 500 pieces or without a picture, for specialists	Puzzles with more than 500 pieces (see Note 1)	—
Fireworks including percussion caps, except percussion caps specifically designed for toys	Fireworks, including percussion caps which are not specifically designed for toys (see Note 1)	—
Products containing heating elements intended for use under the supervision of an adult in a teaching context	Products intended for use for educational purposes in schools and other pedagogical contexts under the surveillance of an adult instructor, such as science equipment (see Note 1)	—
Steam engines	Toy steam engines (see Note 2)	—
Video toys that can be connected to a video screen and operated at a nominal voltage greater than 24 V	—	—
Babies' pacifiers (dummies)	Babies' soothers (see Note 1)	—
Faithful reproduction of firearms	Reproductions of real fire arms (see Note 1)	—
Electric ovens, irons or other functional products operated at a nominal voltage greater than 24 V	Functional educational products, such as electric ovens, irons or other functional products, as defined in 2009/48/EC, operated at a nominal voltage exceeding 24 V which are sold exclusively for teaching purposes under adult supervision (see Note 1)	—
Bows for archery with an overall relaxed length exceeding 120 cm	Bows for archery over 120 cm long (see Note 1)	—
Fashion jewellery for children	Fashion accessories for children which are not for use in play (see Note 1)	—
	Scooters and other means of transport designed for sport or which are intended to be used for travel on public roads or public pathways	Non-powered scooters (see Consumer Safety Specification F2264) Recreational powered scooters and pocket bikes (see Consumer Safety Specification F2641)
—	Electrically driven vehicles which are intended to be used for travel on public roads, public pathways, or the pavement thereof (see Note 1)	—

NOTE 1 For the purpose of EN 71-1, these product types are not considered as toys. There are guidance documents issued by CEN to assist in the classification of toys.

NOTE 2 EN 71-1 does not apply to these toys.

© ISO 2020 – All rights reserved
Documents
Document Sharing Hub
Full document details: ISO TR 08124-9-2020

Table 2 *(continued)*

ISO 8124-1	EN 71-1	ASTM F963
—	Electronic equipment, such as personal computers and game consoles, used to access interactive software and their associated peripherals, unless the electronic equipment or the associated peripherals are specifically designed for and targeted at children and have a play value on their own, such as specially designed personal computers, key boards, joy sticks or steering wheels (see Note 1)	—
—	Interactive software, intended for leisure and entertainment, such as computer games, and their storage media, such as CDs (see Note 1)	—
—	Child-appealing luminaires (see Note 1)	—
—	Electrical transformers for toys (see Note1)	—
—	—	Tricycles
	—	Crayons, paints, chalks, and other similar art materials in which the material itself or the finished item is not primarily of play value, except that all art materials, whether or not a component of a toy, must comply with LHAMA, in accordance with 4.29.1 to 4.29.3.
—	—	Constant air inflatables

NOTE 1 For the purpose of EN 71-1, these product types are not considered as toys. There are guidance documents issued by CEN to assist in the classification of toys.

NOTE 2 EN 71-1 does not apply to these toys.

5 Comparison of terms and definitions

5.1 General

Table 3 illustrates the terms that are defined in the referenced standards.

Table 3 — Defined terms

ISO 8124-1	EN 71-1	ASTM F963
3.1 accessible	3.1 accessible	3.1.2 accessible
3.2 aquatic toy	3.3 aquatic toy	3.1.4 aquatic toy
3.3 arrow	3.2 arrow	3.1.5 arrow
3.4 backing	3.5 backing	—
3.5 ball	3.6 ball	3.1.7 ball
3.6 battery-operated toy	—	3.1.11 battery-operated toy

© ISO 2020 – All rights reserved

Documents
Document Sharing Hub
Full document details: ISO TR 08124-9-2020

Table 3 *(continued)*

ISO 8124-1	EN 71-1	ASTM F963
3.7 burr	3.7 burr	3.1.12 burr
3.8 close-to-the-ear toy	3.11 close-to-the-ear toy	3.1.14 close-to-the-ear toy
3.9 collapse	3.12 collapse	3.1.16 collapse
3.10 cord	3.13 cord	3.1.19 cord
3.11 crushing	3.16 crushing	3.1.21 crushing
3.12 C-weighted peak sound pressure level ($L_{p\mathrm{Cpeak}}$)	3.50 peak emission sound pressure level	3.1.13 C-weighted peak sound pressure level (L_{Cpeak})
3.13 dart	3.17 dart	—
3.14 discharge mechanism	3.18 discharge mechanism	3.1.24 discharge mechanism
3.15 driving mechanism	3.19 driving mechanism	—
3.16 edge 3.16.1 curled edge 3.16.2 hemmed edge 3.16.3 rolled edge	3.20 edge	3.1.22 curled edge 3.1.41 hemmed edge 3.1.75 rolled edge
3.17 A-weighted equivalent sound pressure level ($L_{p\mathrm{Aeq}}$)	3.72 time-averaged emission sound pressure level	3.1.1 A-weighted equivalent sound pressure level (L_{Aeq})
3.18 expanding material	3.24 expanding material	3.1.27 expanding material
3.19 explosive action	—	3.1.28 explosive action
3.20 fastener	3.25 fastening	3.1.30 fastener
3.21 feathering	—	3.1.31 feathering
3.22 flash	—	3.1.32 flash
3.23 folding mechanism	—	3.1.33 folding mechanism
3.24 free flight	3.30 free flight	3.1.34 free flight
3.25 functional magnet in electrical or electronic components of toys	3.33 functional magnet in electrical or electronic components of toys	—
3.26 functional toy	3.34 functional product 3.35 functional toy	—
3.27 fuzz	3.36 fuzz	3.1.35 fuzz
3.28 glass	—	—
3.29 hand-held toy	3.37 hand-held toy	3.1.36 hand-held toy
3.30 harm	—	—
3.31 hazard	—	3.1.37 hazard
3.32 hazardous projection	—	3.1.65 projection, hazardous
3.33 hazardous sharp edge	—	3.1.25 edge, hazardous
3.34 hazardous sharp point	—	3.1.57 point, hazardous
3.35 hinge-line clearance	3.38 hinge line	3.1.42 hinge-line clearance
3.36 lap joint	3.46 overlap joint	3.1.44 lap joint
3.37 large and bulky toy	3.39 large and bulky toy	3.1.45 large and bulky toy
3.38 leading edge	3.40 leading part	3.1.47 leading edge
3.39 marble	marble is covered by the definition of “balls” in EN 71-1	3.1.49 marble
3.40 magnetic component	3.41 magnetic component	3.1.38 hazardous magnet 3.1.39 hazardous magnetic component
3.41 magnetic/electrical experimental set	3.42 magnetic/electrical experimental set	3.1.48 magnetic/electrical experimental set

© ISO 2020 – All rights reserved
Documents
Document Sharing Hub
Full document details: ISO TR 08124-9-2020

Table 3 *(continued)*

ISO 8124-1	EN 71-1	ASTM F963
3.42 maximum A-weighted sound pressure level (L_{pAFmax})	3.43 maximum emission sound pressure level	3.1.1 A-weighted equivalent sound pressure level (L_{pAeq}) 3.1.51 maximum A-weighted sound pressure level (L_{AFmax})
3.43 metal	—	—
3.44 normal use	—	3.1.53 normal use
3.45 packaging	3.47 packaging	3.1.55 packaging
3.46 paper	3.48 paper	A5.2.6 paper (applied to flammability requirement)
3.47 play furniture	—	—
3.48 pompom	—	3.1.58 pompom
3.49 projectile	3.53 projectile	3.1.62 projectile
3.50 projectile toy with stored energy	3.54 projectile toy with stored energy	3.1.63 projectile toy with stored energy
3.51 projectile toy without stored energy	3.55 projectile toy without stored energy	3.1.64 projectile toy without stored energy
3.52 protective cap, protective cover or protective tip	—	3.1.66 protective cap or cover 3.1.67 protective tip
3.53 pull or push toy	3.56 pull-along or push toy	3.1.68 push/pull toy
3.54 rattle	3.57 rattle	3.1.69 rattle
3.55 reasonably foreseeable abuse	—	3.1.70 reasonably foreseeable abuse
3.56 reference box	—	3.1.71 reference box
3.57 removable component	3.58 removable component	—
3.58 resilient material	—	—
3.59 rigidity	—	3.1.73 rigid
3.60 risk	—	—
3.61 simulated protective equipment	—	3.1.79 simulated protective equipment
3.62 soft-filled toy, stuffed toy	3.61 soft-filled toy	3.1.80 soft-filled toy/stuffed toy
3.63 splinter	3.62 splinter	3.1.81 splinter
3.64 springs 3.64.1 helical spring 3.64.1.1 compression helical spring 3.64.1.2 extension helical spring 3.64.2 spiral spring	3.63 spring 3.63.1 helical spring 3.63.2 compression spring 3.63.3 extension spring 3.63.4 spiral spring	3.1.40 helical spring 3.1.17 compression spring 3.1.30 extension spring 3.1.82 spiral spring
3.65 squeeze toy	3.64 squeeze toy	3.1.83 squeeze toy
3.66 table-top, floor and crib toy	3.68 table-top or floor toy	3.1.87 tabletop, floor, and crib toy
3.67 teether	3.71 teether	3.1.89 teether
3.68 tool	3.73 tool	3.1.90 tool
3.69 toy	—	3.1.91 toy
3.70 toy bicycle	3.75 toy bicycle	—
3.71 toy chest	—	3.1.92 toy chest
3.72 toy scooter	3.77 toy scooter	—
3.73 elastic	3.21 elastic material	3.1.26 elastic
3.74 fixed loop	3.28 fixed loop	—

© ISO 2020 – All rights reserved

Documents
Document Sharing Hub
Full document details: ISO TR 08124-9-2020

Table 3 *(continued)*

ISO 8124-1	EN 71-1	ASTM F963
3.75 tangled loop	3.69 tangled loop	—
3.76 noose	3.45 noose	—
3.77 ribbon	3.60 ribbon	—
3.78 strap	3.65 strap	3.1.85 strap
3.79 tape	3.70 tape	—
3.80 electrical cable	3.22 electrical cable	—
3.81 yo-yo ball	3.81 yo-yo ball	3.1.94 yo yo elastic tether toy
3.82 cord with potential to tangle	3.15 cord or chain with the potential to tangle	3.1.88 tangle or form a loop
3.83 chain	3.9 chain	—
3.84 steady-state sound	—	3.1.84 steady-state sound (noise)
3.85 paperboard	3.49 paperboard	—
—	3.4 asphyxiation	—
—	3.8 cap-firing toy	—
—	3.10 choking	—
—	3.14 crack	—
—	3.23 emission sound pressure level	—
—	3.26 filling	—
—	3.27 fixed drive	—
—	3.29 flying toy	—
—	3.31 free-wheeling mechanism	—
—	3.32 functional edge or point	—
—	3.44 maximum saddle height	—
—	3.51 percussion toy	—
—	3.52 plastic sheeting	—
—	3.59 remote controlled flying toy	—
—	3.66 suction cup	—
—	3.67 suffocation	—
—	3.74 toy bag	—
—	3.79 voice toy	—
—	3.80 wind toy	—
—	—	3.1.46 latex balloon
—	—	3.1.56 pinching
—	—	3.1.61 principal display panel
—	—	3.1.74 rigid leading edge
—	—	3.1.93 toy seat

5.2 Analysis of the main differences between the terms and definitions

5.2.1 Aquatic toy

EN 71-1 does not specifically exclude bathroom toys and beach balls, as shown in Table 4.

© ISO 2020 – All rights reserved
Documents
Document Sharing Hub
Full document details: ISO TR 08124-9-2020

Table 4 — Aquatic toy definitions

ISO 8124-1	EN 71-1	ASTM F963
3.2 aquatic toy article, whether inflatable or not, intended to bear the mass of a child and used as an instrument of play in shallow water Note 1 to entry: Bathroom toys and beach balls are not considered aquatic toys	3.3 aquatic toy toy, whether inflatable or not, intended for use in shallow water and which is capable of carrying or supporting a child on the water	3.1.4 aquatic toy an article, whether inflatable or not, intended to bear the mass of a child and used as an instrument of play in shallow water. This does not include bath toys, beach balls, and United States Coast Guard-approved life saving devices

5.2.2 Asphyxiation and choking

EN 71-1 defines asphyxiation and choking. ISO 8124-1 does not provide definitions, although these terms are mentioned in ISO 8124-1:2018, Annex E.

5.2.3 Ball

The definition of ball in ASTM F963 is somewhat narrower than in EN 71-1 and ISO 8124-1 because it requires meeting parameters for both shape and function. See Table 5.

Table 5 — Ball definitions

ISO 8124-1	EN 71-1	ASTM F963
3.5 ball spherical, ovoid or ellipsoidal object, usually but not always designed or intended to be thrown, hit, kicked, rolled, dropped or bounced	3.6 ball spherical, ovoid or ellipsoidal object, usually but not always designed or intended to be thrown, hit, kicked, rolled, dropped or bounced	3.1.7 ball any spherical, ovoid, or ellipsoidal object that is designed or intended to be thrown, hit, kicked, rolled, dropped, or bounced. The term “ball” includes any spherical, ovoid, or ellipsoidal object that is attached to a toy or article by means of string, elastic cord, or similar tether. The term “ball” also includes any multisided object formed by connecting planes into a generally spherical ovoid, or ellipsoidal shape that is designated or intended to be used as a ball. The term “ball” does not include dice, or balls permanently enclosed inside pinball machines, mazes, or similar outer containers. A ball is permanently enclosed if, when tested in accordance with 16 CFR 1500.53, it is not removed from the outer container

5.2.4 Close-to-the-ear toy

In Table 6, EN 71-1 defines a close-to-the-ear toy as one that is intended to be used within 2,5 cm of the ear.

© ISO 2020 – All rights reserved

Documents
Document Sharing Hub
Full document details: ISO TR 08124-9-2020

Table 6 — Close-to-the-ear toy definitions

ISO 8124-1	EN 71-1	ASTM F963
3.8 close-to-the-ear toy toy that is intended to be used close to the ear, i.e. the sound-emitting part of such a toy is normally put against the ear of a child EXAMPLE Toy cellphones or toy telephones that emit sounds from the hand piece	3.11 close-to-the-ear toy toy clearly designed to emit sound, intended to be used within 2,5 cm of the ear Note 1 to entry: Examples of close-to-the-ear toys are toy telephones and toy rifles with a loudspeaker in the stock	3.1.14 close-to-the-ear toy a toy that is intended to be used close to the ear, that is, the sound emitting part of such a toy is normally put against the ear of a child (example—toy telephones that emit sounds from the earpiece)

5.2.5 Cord

ISO 8124-1 and EN 71-1 define cord as flexible textile or non-textile material. They also clarify that electrical cables used for connecting a toy to a supply of electricity or to a piece of electronic equipment which is not itself a toy or part of a toy are not considered to be cords, while accessible electric wires (e.g. between a battery box and a sound source in a soft-filled toy) which are not electrical cables are, however considered to be cords. ASTM F963 does not include “chain” and “certain weak and long springs” in the definition of cord. See Table 7.

Table 7 — Cord definitions

ISO 8124-1	EN 71-1	ASTM F963
3.10 cord narrow piece of flexible textile or non-textile material, the length of which is significantly greater than the thickness and width EXAMPLE Cord includes elastic material, monofilament polymeric material, tape, ribbon, rope, strap, chain, woven and twisted material and string, as well as certain weak and long springs Note 1 to entry: Electrical cables (see 3.81) are not considered to be cords. Accessible electrical wires (e.g. between a battery box and a sound source in a soft filled toy) which are not electrical cables are, however, considered to be cords	3.13 cord narrow piece of flexible textile or non-textile material of which the length is significantly greater than its thickness and width EXAMPLE examples of cords include elastic material, monofilament polymeric material, tape, ribbon, rope, strap, woven and twisted material and string as well as certain weak and long springs Note 1 to entry: Electrical cables (see 3.22) are not considered to be cords. Accessible electrical wires (e.g. between a battery box and a sound source in a soft filled toy) which are not electrical cables are however considered to be cords	3.1.19 cord a length of slender, flexible material including monofilaments, woven and twisted cord, rope, plastic textile tapes, ribbon, and those fibrous materials commonly called string

5.2.6 Elastic

ISO 8124-1 and EN 71-1 do not specify the conditions for recovery from elongation. See Table 8.

Table 8 — Elastic definitions

ISO 8124-1	EN 71-1	ASTM F963
3.73 elastic material or item that is stretchable when subjected to an external force and which is able to recover or nearly recover its original length or shape when the force is removed	3.21 elastic material material or item that is stretchable when subjected to an external force and which is able to recover or nearly recover its original length or shape when the force is removed	3.1.26 elastic material that will recover its former size and shape essentially and instantaneously after being elongated at least 10 % at a testing speed of not less than 20 in. (510 mm)/min

© ISO 2020 – All rights reserved
Documents
Document Sharing Hub
Full document details: ISO TR 08124-9-2020

5.2.7 Hand-held toy

The definition in EN 71-1 includes exemptions for toys with certain hand-held features, such as close-to-the-ear toys, rattles, squeeze toys, cap-firing toys, wind toys, voice toys and percussion toys. ISO 8124-1 and ASTM F963 include cap-firing toys. See Table 9.

Table 9 — Hand-held toy definitions

ISO 8124-1	EN 71-1	ASTM F963
3.29 hand-held toy toy that is intended to be used or operated while being held in the hand EXAMPLE Toy tools, small electronic games, stuffed animals, dolls, musical toys and cap-firing toys	3.37 hand-held toy toy clearly designed to emit sound, intended to be held in the hand but excluding close-to-the-ear toys, rattles, squeeze toys, cap-firing toys, wind toys, voice toys and percussion toys NOTE 1 to entry: Examples of hand-held toys are clicking toys, toy tools, and toys guns	3.1.36 hand-held toy a toy that is intended to be used or operated while being held in the hand. Examples include toy tools, small electronic games, stuffed animals, dolls, musical toys, and cap-firing toys
NOTE The definitions in ISO 8124-1 and ASTM F963 are exclusively applied to acoustic requirements on toys designed to emit sound.		

5.2.8 Hazard

ISO 8124-1 provides examples of hazards. See Table 10.

Table 10 — Hazard definitions

ISO 8124-1	EN 71-1	ASTM F963
3.31 hazard potential source of harm Note 1 to entry: The term hazard can be qualified in order to define its origin or the nature of the expected harm (i.e. electric shock hazard, crushing hazard, cutting hazard, toxic hazard, fire hazard or drowning hazard)	— NOTE 1 It is stated clause 7.2 of EN 71-1 defines the hazard as a potential source of harm	3.1.37 hazard any characteristic of a toy that presents an unreasonable risk of injury or illness during normal use or as a result of reasonably foreseeable abuse

5.2.9 Large and bulky toy

The definition of large and bulky toy in ASTM F963 does not include consideration of the toy's mass (4,5 kg or more), while mass is one of the factors that can define a toy as large and bulky in ISO 8124-1 and EN 71-1. See Table 11.

© ISO 2020 – All rights reserved

Documents
Document Sharing Hub
Full document details: ISO TR 08124-9-2020

Table 11 — Large and bulky toy definitions

ISO 8124-1	EN 71-1	ASTM F963
3.37 large and bulky toy toy that has a projected base area of more than 0,26 m^2 or a volume of more than 0,08 m^3 calculated without regard to minor appendages, or a mass of 4,5 kg or more Note 1 to entry: The base area for toys having permanently attached legs is measured by calculating the area enclosed by straight lines connecting the outermost edge of each leg of the perimeter	3.39 large and bulky toy toy that has a projected base area of more than 0,26 m^2 or a volume of more than 0,08 m^3 calculated without regard to minor appendages, or a mass of 4,5 kg or more Note 1 to entry: The base area of a toy having permanently attached legs is the area enclosed by straight lines connecting the outermost edge of each leg of the perimeter	3.1.45 large and bulky toy toy that has a projected base area of more than 400 in^2 (0,26 m^2) or a volume of more than 3ft^3 (0,08 m^3) calculated without regard to minor appendages NOTE 2 The base area for toys having permanently attached legs is measured by calculating the area enclosed by straight lines connecting the outermost edge of each leg of the perimeter
NOTE In ASTM F963, consideration of toy mass is made during the application of the drop test.		

5.2.10 Marble

Marble is defined differently in ASTM F963 and ISO 8124-1. ASTM F963 excludes a marble that is permanently enclosed in a toy or game, while ISO 8124-1 does not make this distinction. EN 71-1 does not define marble; however, marble is covered by the definition of ball in that standard. See Table 12.

Table 12 — Marble definitions

ISO 8124-1	EN 71-1	ASTM F963
3.39 marble sphere made of hard material, such as glass, agate, marble or plastic, which is used in various children's games, generally as a playing piece or marker	—	3.1.49 marble a sphere made of a hard material, such as glass, agate, marble, or plastic, that is used in various children's games, generally as a playing piece or marker. The term "marble" does not include a marble permanently enclosed in a toy or game. A marble is permanently enclosed if, when tested in accordance with 16 CFR 1500.53, it is not removed from the toy or game

5.2.11 Paper

In ISO 8124-1 and EN 71-1, paper is defined as a sheet formed by irregularly intervened cellulose fibres with a mass per unit area of 400 g/m^2 or less. ASTM F963:2017, Annex 5 has a definition for paper, but no numerical parameters are included and the definition is limited to the flammability testing procedure. See Table 13.

© ISO 2020 – All rights reserved
Documents
Document Sharing Hub
Full document details: ISO TR 08124-9-2020

Table 13 — Paper definitions

ISO 8124-1	EN 71-1	ASTM F963
3.46 paper sheet formed by irregularly intervened cellulose fibres with a mass per unit area of 400 g/m^2 or less Note 1 to entry: If paper with polymeric lamination, or other treatments which may be resistant to wetting, no longer presents the same properties as paper, then it is not treated as such	3.48 paper sheet formed by irregularly intervened cellulose fibres with a mass per unit area of 400 g/m^2 or less A.26 in the EN 71-1: It should be noted that some paper and paperboard components have polymeric lamination, thick coatings like varnish, or other treatments which may mean they are more resistant to wetting with an increased potential choking hazard as a result	A5.2.6 paper a thin, flat, single layer of material produced by the compression of fibers. The fibers are usually composed of cellulose. Examples of paper products are traditional playing cards, newspaper, magazines, and construction paper. Examples of products that are not paper are cardboard, and paperboard (multiple layers of paper bonded together)

5.2.12 Pompom

In ISO 8124-1, the definition of pompom includes substantially spherical, ovoid or ellipsoidal shapes, while ASTM F963 only references a spherical shape. ISO 8124-1 notes that tassels with long strands are not considered pompoms and provides images for reference. EN 71-1 does not include a definition for pompoms. See Table 14.

Table 14 — Pompom definitions

ISO 8124-1	ASTM F963
3.48 pompom lengths or strands of fibre, yarn or thread clamped or secured and tied in the centre, and brushed up to form a substantially spherical, ovoid or ellipsoidal shape Note 1 to entry: This definition includes substantially spherical-, ovoid-, and ellipsoidal-shaped attachments made of stuffed materials (see Figure 5) Note 2 to entry: Tassels with long strands are not considered pompoms (see Figure 6)	3.1.58 pompom lengths or strands of fiber, yarns, or threads clamped or secured and tied in the center, and brushed up to form a spherical shape. Also included are spherical shaped attachments made of stuffed material

5.2.13 Projectile

The definition of projectile in ISO 8124-1 and ASTM F963 states that a projectile does not include self-propelled flying toys. See Table 15.

Table 15 — Projectile definitions

ISO 8124-1	EN 71-1	ASTM F963
3.49 projectile object without capacity for self-propulsion, intended to be launched into free flight Note 1 to entry: The definition does not include self-propelled flying toys such as remote control helicopters and wind-up airplanes unless the capacity for self-propulsion is from self-contained compressed gas and/or liquid (e.g. rockets)	3.53 projectile object intended to be launched, thrown or released into free flight or trajectory in the air Note 1 to entry: This includes objects where the travel is ultimately constrained by means of a tether (e.g. pop-gun)	3.1.62 projectile an object intended to be launched into a free flight 3.1.62.1 Discussion This does not include self-propelled flying toys such as remote control helicopters and wind-up airplanes. (See Rationale for additional explanation)

© ISO 2020 – All rights reserved

Documents
Document Sharing Hub
Full document details: ISO TR 08124-9-2020

5.2.14 Projectile toy with stored energy

Compared to EN 71-1, the definition of projectile toy with stored energy in ISO 8124-1 and ASTM F963 provides additional detail regarding the discharge mechanism. See Table 16.

Table 16 — Projectile toy with stored energy definitions

ISO 8124-1	EN 71-1	ASTM F963
3.50 projectile toy with stored energy toy with a projectile launched by means of a discharge mechanism capable of storing energy independent of the user and incorporating a release mechanism Note 1 to entry: Release mechanisms should operate following at least one single discrete activation by the user. Note 2 to entry: Toy rockets and similar toys propelled by a chemical reaction or compressed gases (e.g. air) where the energy can be stored independent of the user are considered as projectile toys with stored energy. For example, in a rocket propelled by a mixture of vinegar and baking soda, the user initiates the reaction by mixing the two substances but no longer has control of the actual launching. The rocket will launch when the pressure build up overcomes the force that holds the rocket onto the launch platform	3.54 projectile toy with stored energy toy with a projectile launched by means of a discharge mechanism capable of storing energy independent of the user and incorporating a release mechanism	3.1.63 projectile toy with stored energy toy with a projectile launched by means of a discharge mechanism capable of storing energy independent of the user and typically requiring at least one discrete action by the user to launch the projectile 3.1.63.1 Discussion This includes toy rockets and similar toys propelled by a chemical reaction or compressed gasses (for example, air) where the energy can be stored independent of the user. For example, in a rocket propelled by a mixture of vinegar and baking soda, the user initiates the reaction by mixing the two substances but no longer has control of the actual launching. The rocket will launch when the pressure build up overcomes the force that holds the rocket onto the launch platform

5.2.15 Protective cap, protective cover or protective tip

ASTM F963 provides definitions for the terms protective cap or cover (see ASTM F963:2017, 3.1.66) and protective tip (see ASTM F963:2017, 3.1.67). ISO 8124-1 combines them into one definition, listed as protective cap, protective cover or protective tip. EN 71-1 does not specifically define these terms, but uses the phrase “protective components” within the standard. See Table 17.

© ISO 2020 – All rights reserved
Documents
Document Sharing Hub
Full document details: ISO TR 08124-9-2020

Table 17 — Protective cap, protective cover or protective tip definitions

ISO 8124-1	EN 71-1	ASTM F963
3.52 protective cap, protective cover or protective tip component that is attached to a potentially hazardous edge or projection to reduce the risk of injury	—	3.1.66 protective cap or cover a component that is attached to a potentially hazardous edge or projection to reduce the possibility of injury 3.1.67 protective tip a component that is attached to the impacting end of a projectile to minimize injury if it should impact on the body, and also to prevent damage to the projectile upon striking a target, provide a means of attaching the projectile to the target as in the case of suction cups, or prevent damage to inanimate objects

5.2.16 Pull or push toy

In ISO 8124-1, pull or push toy is defined as a toy that is intended to be pulled or pushed along the floor or ground. In EN 71-1, pull-along or push toy is defined as a toy on which movement is imparted by the user, for example by pulling it by a cord or pushing it by means of a rigid extension. In ASTM F963, push/pull toy is defined as a toy with a cord/tether or a handle attached to the toy and where the toy is intended for use on the ground with the child in a standing/upright position, typically walking, while using the toy. The definition of push/pull toy in ASTM F963 provides more details than ISO 8124-1 or EN 71-1.

In addition, ISO 8124-1 clarifies that toys intended for children aged 36 months and over are not regarded as pull or push toys. See Table 18.

Table 18 — Pull or push toy definitions

ISO 8124-1	EN 71-1	ASTM F963
3.53 pull or push toy toy that is intended to be pulled or pushed along the floor or ground Note 1 to entry: Toys intended for children aged 36 months and over are not regarded as pull or push toys	3.56 pull-along or push toy toy on which movement is imparted by the user for example by pulling it by a cord or pushing it by means of a rigid extension	3.1.68 push/pull toy a toy with a cord/tether or a handle attached to the toy and where the toy is intended for use on the ground with the child in a standing/upright position, typically walking, while using the toy

5.2.17 Rattle

There is a difference in the applicable age range for rattles across the referenced standards. ASTM F963 is applicable for children under 18 months, while EN 71-1 and ISO 8124-1 use “children who are too young to sit up unaided” with the clarification, in the annexes of both standards, that children normally start to sit up unaided between the ages of five months and 10 months. See Table 19.

© ISO 2020 – All rights reserved

Documents
Document Sharing Hub
Full document details: ISO TR 08124-9-2020

Table 19 — Rattle definitions

ISO 8124-1	EN 71-1	ASTM F963
3.54 rattle toy that is clearly designed to emit sound when shaken, typically intended for children who are too young to sit up unaided	3.57 rattle toy, intended for children who are too young to sit up unaided, that is clearly designed to emit sound when shaken or activated by the child or another person	3.1.69 rattle a toy that is clearly designed to emit sound when shaken typically intended for children under 18 months

5.2.18 Toy scooter

In EN 71-1, toy scooter is defined as a ride-on toy that is not intended for sport or to be used for travel on public roads or public pathways.

EN 71-1 only covers products powered by muscular action while ISO 8124-1 allows for power by other means. See Table 20.

Table 20 — Toy scooter definitions

ISO 8124-1	EN 71-1	ASTM F963
3.72 toy scooter ride-on toy which is propelled by the muscular action of the user or other means and may be foldable or not, intended for children with a body mass of 50 kg or less and comprised of at least one platform for standing, at least two wheels, and a steering system equipped with an adjustable or fixed-length steering tube Note 1 to entry: The definition includes foldable and non-foldable toy scooters	3.77 toy scooter ride-on toy, not intended for sport or to be used for travel on public roads or public pathways, which is propelled by the muscular action of the user and may be foldable or not, intended for children with a body mass of 50 kg or less: comprising at least one platform for standing, at least two wheels, and a steering system equipped with an adjustable or fixed-length steering tube	—

5.2.19 Squeeze toy

There is a difference in the applicable age range for squeeze toys across the referenced standards, as shown in Table 21. ASTM F963 and ISO 8124-1 are applicable for toys intended for children under 18 months, while EN 71-1 applies to “children who are too young to sit up unaided”.

The definition in EN 71-1 does not discuss the ability of the toy to recover its original shape when released. See Table 21.

Table 21 — Squeeze toy definitions

ISO 8124-1	EN 71-1	ASTM F963
3.65 squeeze toy hand-held pliable toy, usually incorporating a noise-making feature activated by forcing air through an opening when flexed or squeezed and which usually recovers its original shape when released	3.64 squeeze toy pliable toy, intended for children who are too young to sit up unaided, incorporating a sound-making feature activated by forcing air through an opening, clearly designed to emit sound when flexed or squeezed by the child or another person	3.1.83 squeeze toy a handheld pliable toy, intended for children under the age of 18 months, usually incorporating a noise-making feature activated by forcing air through an opening when flexed or squeezed, and which recovers to its original shape when released
NOTE ISO 8124-1:2018, 4.5.1.2 only applies to squeeze toys intended for children under 18 months.		

© ISO 2020 – All rights reserved
Documents
Document Sharing Hub
Full document details: ISO TR 08124-9-2020

6 Comparison of requirements

6.1 General

The comparisons in this clause are based on the requirements in ISO 8124-1; they focus on the main differences between the referenced standards.

For the purpose of this document, the subclauses related to warnings and test methods are included in the general requirements section.

6.2 Normal use

The clauses for normal use requirements in the referenced standards are indicated in Table 22.

Table 22 — Normal use clauses

ISO 8124-1	EN 71-1	ASTM F963
4.1 Normal use	1 scope	8.5 Normal use testing
5.23 Washable toys	A.26 General requirements for toys intended for children under 36 months (see 5.1)	8.5.1 Washable toys 8.5.1.1 Conditions for machine washing and tumble drying

The normal use testing in ASTM F963 provides more details than the testing specified in ISO 8124-1 and EN 71-1. Different requirements for normal use are shown in Table 23.

© ISO 2020 – All rights reserved

Documents
Document Sharing Hub
Full document details: ISO TR 08124-9-2020

Table 23 — Requirements for normal use

ISO 8124-1	EN 71-1	ASTM F963
All toys shall be tested in accordance with the relevant tests in 5.1 (general) to 5.22 (folding or sliding mechanisms) in order to ensure that risks as a result of normal wear and/or deterioration are minimized After normal use testing, the toy shall continue to conform to the relevant requirements of Clause 4 (requirements)	Refers to new toys, taking into account the period of foreseeable and normal use, and that the toys are used as intended or in a foreseeable way, bearing in mind the behaviour of children	Normal use testing. These tests are intended to simulate normal use conditions so as to ensure that hazards are not generated through normal wear and deterioration. The object of these tests shall be to simulate the normal play mode of the toy, and the tests are therefore unrelated to the reasonably foreseeable abuse tests of 8.6 – 8.13. The tests are intended to uncover hazards rather than to demonstrate the reliability of the toy. The fact that a mechanism or material of a toy fails during testing is relevant only if the failure creates a potential hazard. Toys shall be subject to appropriate tests to simulate the expected mode of use of the particular toy. For example, levers, wheels, catches, triggers, strings, wires, chains, and so on, that are intended to be actuated by a child shall be operated repeatedly. Spring or power-operated devices shall be tested similarly. The tests shall be conducted in an expected use environment. For example, toys intended for use in the bathtub shall be tested in soapy water, and toys intended for use in the sandbox shall be exposed to sand during testing. It is recognized that no specific requirements are defined here; it would not be possible in view of the wide range of toys covered by this specification. However, the manufacturer or distributor shall do enough testing to satisfy himself that normal use during the estimated lifetime of the toy is being simulated. The toy shall be inspected after such tests, and hazards such as points, sharp edges, and release of small parts shall be evaluated in accordance with the relevant requirements listed in Section 4

6.3 Reasonably foreseeable abuse

The clauses for reasonably foreseeable abuse in the referenced standards are indicated in Table 24.

Table 24 — Reasonably foreseeable abuse clauses

ISO 8124-1	EN 71-1	ASTM F963
4.2 Reasonably foreseeable abuse 5.24 Reasonably foreseeable abuse tests	—	8.6 Abuse testing
5.24.2 Drop test	8.5 Drop test (see 4.5, 4.6, 4.10.2, 4.14.2, 4.22, 4.23.2, 4.25, 5.1, 5.10, 5.12 and 5.13)	8.7.1 Drop test
—	—	8.7.3 Tumble test for wheeled toys
5.14 Impact test for toys that cover the face	4.14.2 b) 8.7 Impact test (see 4.14.2)	8.7.4 Impact test for toys that cover the face
5.24.3 Tip-over test for large and bulky toys	8.6 Tip over test (see 4.10.2, 4.22, 4.23.2, 5.1, 5.10, 5.12 and 5.13)	8.7.2 Tipover test for large, bulky toys

© ISO 2020 – All rights reserved
Documents
Document Sharing Hub
Full document details: ISO TR 08124-9-2020

Table 24 *(continued)*

ISO 8124-1	EN 71-1	ASTM F963
5.33 Impact test for magnets	8.7 Impact test (see 4.5, 4.6, 4.10.2, 4.22, 4.23.2, 4.25, 5.1, 5.10, 5.12, 5.13 and A.38)	8.25.4.6 Impact test (for magnet toy)
5.24.4 Dynamic strength test for wheeled ride-on toys other than toy scooters	8.22 Dynamic strength (see 4.15.1.3)	8.21 Dynamic strength test for wheeled ride-on toys
5.24.5 Torque test	8.3 Torque test (see 4.6, 4.11, 4.14.2, 4.17, 4.18, 4.22, 4.23.2, 4.25, 5.1, 5.10, 5.12, 5.13 and Clause 6)	8.8 Torque tests for removal of components
5.24.6 Tension test	8.4 Tension test (see A.37)	8.9 Tension test for removal of components
5.24.6.1 General procedure	8.4.2.1 General (see 4.6, 4.11, 4.14.2, 4.17, 4.18, 4.22, 4.23, 4.25, 5.1, 5.3, 5.10, 5.12, 5.13 and Clause 6)	—
5.24.6.2 Tension test for seams in soft-filled (stuffed) toys, bean-bag-type toys, and other similar filled toys	8.4.2.2 Seams and materials (see 4.23.2 and 5.2)	8.9.1 Tension test for seams in stuffed toys and beanbag-type toys
5.24.6.3 Tension test for pompoms	—	—
5.24.6.4 Tension test for protective components	8.4.2.3 Protective components (see 4.9 and 4.17.1)	—
5.24.6.5 Tension test for a projectile with a suction cup	8.4.2.4 Tension test for a projectile with a suction cup	8.9.2 Tension test for suction cups on projectiles
—	8.4.2.6 Perpendicular tension test for rotors and propellers	—
—	8.4.2.7 Tension test for rotors and propellers	—
5.24.7 Compression test	8.8 Compression test (see 4.6, 4.14.2, 4.22, 4.23.2, 4.25, 5.1, 5.10, 5.12, 5.13 and A.39)	8.10 Compression test 8.25.4.7 Compression test (for magnet toy)
—	8.9 Soaking test (see 4.11, 4.23.2, 5.1, 5.10 and 5.12)	—
5.24.8 Flexure test	8.13 Flexibility of metallic wires (see 4.8 and A.41)	8.12 Flexure test
—	—	8.11 Tests for tire removal and snap-in wheel and axle assembly removal
5.34 Soaking test for magnets	8.9 Soaking test (See 4.11, 4.23.2, 5.1, 5.10 and 5.12)	8.25.4.1 Soaking test for magnets

a) The reasonably foreseeable abuse test parameters in ISO 8124-1, EN 71-1 and ASTM F963 are determined according to the age grade of the toy, as shown in Table 25. For the drop test, ISO 8124-1 and ASTM F963 include toy mass criteria; a toy is not subjected to this test if its mass exceeds the upper threshold. EN 71-1 does not include toy mass criteria for exemption from the drop test; however, some clauses substitute the drop test with the tip over test (e.g. 5.1 d), when the toy is large and bulky, as defined in EN 71-1:2014+A1:2018, 3.39.

© ISO 2020 – All rights reserved

Documents
Document Sharing Hub
Full document details: ISO TR 08124-9-2020

Table 25 — Parameters for reasonably foreseeable abuse tests

		0 to18 months	18+ to 36 months	36+ to 96 months
Drop test	ISO 8124-1	10 × (138 ± 5) cm (<1,4 kg)	4 × (93 ± 5 cm) (<4,5 kg)	
	EN 71-1	5 × (850 ± 50) mm		
	ASTM F963	10 × 4,5 ft ± 0,5 in. (137 cm) (<1,4 kg)	4 × 3,0 ft ± 0,5 in. (91 cm) (<1,8 kg)	4 × 3,0 ft ± 0,5 in. (91 cm) (<4,5 kg)
Torque test[a]	ISO 8124-1	(0,45 ± 0,02) N·m		
	EN 71-1	0,34 N·m		
	ASTM F963	2 ± 0,2 in.·lbf (0,23 N·m)	3 ± 0,2 in.·lbf (0,34 N·m)	4 ± 0,2 in.·lbf (0,45 N·m)
Tension test [a]	ISO 8124-1	General tension test (70 ± 2) N Tension test for seams (70 ± 2) N Tension test for pompoms (70 ± 2) N Tension test for protective components (70 ± 2) N		
	EN 71-1	The largest accessible dimension of the component to be gripped and tested is 6 mm or less (50 ± 2) N The largest accessible dimension of the component to be gripped and tested is greater than 6 mm (90 ± 2) N The component to be gripped is made entirely of paperboard (25 ± 2) N Tension test for seams (70 ± 2) N Tension test for protective components (60 ± 2) N		
	ASTM F963	10 ± 0,5 lbf (44,5 N)	15 ± 0,5 lbf (66,8 N)	15 ± 0,5 lbf (66,8 N)
Compression Test [a]	ISO 8124-1	(114 ± 2,0) N		(136 ± 2,0) N
	EN 71-1	(110 ± 5) N		
	ASTM F963	20 ± 0,5 lbf (89,0 N)	25 ± 0,5 lbf (111,3 N)	30 ± 0,5 lbf (133,5 N)
Impact Test	ISO 8124-1	Impact test for toys that cover the face: Drop a steel ball with a diameter of (16 ± 0,15) mm and mass of (16,9 ± 0,7) g from a height of (130 ± 0,5) cm		
		Impact test for magnets: Drop a metallic weight with a mass of (1 ± 0,02) kg, distributed over a diameter of (80 ± 2) mm, through a distance of (100 ± 2) mm		
	EN 71-1	Drop a metallic weight with a mass of (1 ± 0,02) kg, distributed over an area with a diameter of (80 ± 2) mm, through a distance of (100 ± 2) mm		
	ASTM F963	Impact Test for Toys that Cover the Face: Drop a 5/8-in. (16-mm) diameter steel ball weighing 0,56 oz. (15,8 g) (with a tolerance of +0,03 (0,8 g, −0 oz) from a height of 50 in. (1,3 m)		
		Impact Test for magnets: Drop a metallic weight with a mass of (1,0 ± 0,02) kg distributed over an area with a diameter of (80 ± 2) mm through a distance of (100 ± 2) mm		
Flexure test[a]	ISO 8124-1	(70 ± 2) N		
	EN 71-1	(70 ± 2) N		
	ASTM F963	10 ± 0,5 lbf (44,5 N)	15 ± 0,5 lbf (66,8 N)	15 ± 0,5 lbf (66,8 N)

[a] The tests in EN 71-1 are applicable to toys intended for children under 36 months or as specified by certain requirements.

b) EN 71-1 provides a method to determine if a component can be gripped by inserting the feeler gauge between the component and the underlying layer or body of the toy at an angle between 0° and 10° from the toy surface using a force of (10 ± 1) N. If the gauge can be inserted more than 2 mm, the component shall be considered as grippable. There is no such method in ISO 8124-1 and

© ISO 2020 – All rights reserved
Documents
Document Sharing Hub
Full document details: ISO TR 08124-9-2020

ASTM F963. ASTM F963 and ISO 8124-1 apply the tension test to any projection of a toy that a child can grasp with at least the thumb and forefinger or the teeth.

c) Only ASTM F963 specifies a tumble test for wheeled toys.

d) The soaking test in EN 71-1 is applied to toys with magnets, wooden toys, toys intended to be used in water and mouth-actuated toys. The soaking test in ISO 8124-1 and ASTM F963 is limited to toys with magnets.

e) Table 26 indicates the impact medium specifications for the drop test across the referenced standards.

Table 26 — Impact medium specifications for the drop test

	ISO 8124-1	EN 71-1	ASTM F963
Impact medium composition	Vinyl composition tile of approximately 3 mm nominal thickness laid over concrete of at least 64 mm thickness	4 mm thick steel plate with a 2 mm thick coating and placed on a non-flexible horizontal surface	The impact medium shall consist of a 1/8 in. (3 mm) nominal thickness of Type IV vinyl composition tile, composition 1-asbestos free, as specified in Federal Specification SS-T-312B over at least a 2,5 in. (64 mm) thickness of concrete
Hardness	(80 ± 10) Shore A	(75 ± 5) Shore A	—
Area	≥0,3 m^2	—	≥3 ft^2 (0,3 m^2)

f) The seam clamp specified in the referenced standards is very similar between the referenced standards, as shown in Table 27. The key difference exists in whether washers or discs are affixed to the jaws of the clamp. The jaws in ASTM F963 have washers affixed to them, whereas the jaws in EN 71-1 and ISO 8124-1 have discs.

Table 27 — Seam clamps

ISO 8124-1	EN 71-1	ASTM F963
Clamps with jaws to which discs with a diameter of 19 mm are attached 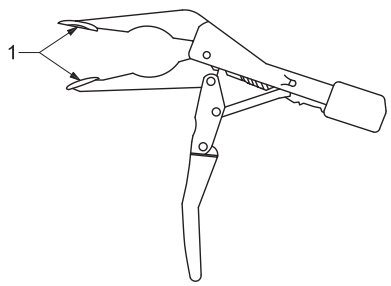 1 Flat Discs	Clamps with jaws to which discs with a diameter of 19 mm are affixed	Clamps with jaws to which are attached 3/4 in. (19 mm) diameter washers 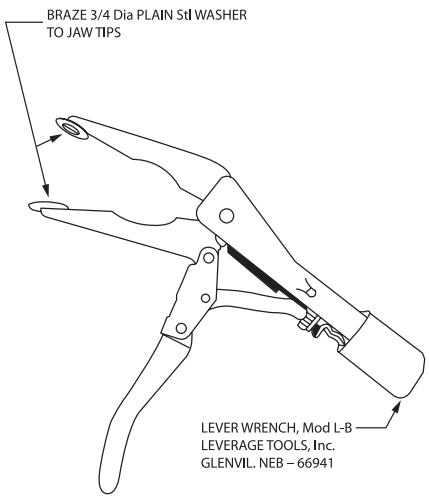 FIG. 27 Seam Clamp

© ISO 2020 – All rights reserved

Documents
Document Sharing Hub
Full document details: ISO TR 08124-9-2020

g) The tip over tests in ISO 8124-1 and EN 71-1 provide more detail than the test specified in ASTM F963. In ISO 8124-1 and EN 71-1 the value of force to be applied (≤120 N) and its position (1 500 mm or top edge of the toy) are specified. See Table 28.

Table 28 — Tip over tests

ISO 8124-1	EN 71-1	ASTM F963
Place the toy on a horizontal surface. Attempt to tip it over by pushing it slowly past its centre of balance three times, one of which shall be in its most onerous position	Place the toy on a horizontal surface and attempt to tip it over by pushing the toy slowly past its centre of balance three times, one of which shall be in its most onerous position	Toys shall be tested for impact by tipping over three times, one of which is in the worst attitude by pushing the sample slowly past its centre of balance onto the impact medium
Gradually apply a force, which is not to exceed 120 N, in a horizontal direction and 1 500 mm above the horizontal surface or at the top edge of the toy for toys less than 1 500 mm in height	By gradually applying a force, which is not to exceed 120 N, in a horizontal direction and 1 500 mm above the horizontal surface or at the top edge of the toy for toys less than 1 500 mm in height	
A non-resilient step with a height of (25 ± 2) mm shall be positioned such that it prevents sliding or rolling of the toy during the test	A non-resilient step with a height of (25 ± 2) mm shall be positioned such that it prevents sliding or rolling of the toy during the test	

h) The tension test for suction cups on projectiles in ISO 8124-1 differs from EN 71-1 and ASTM F963 by having a zero value for the negative tolerance of the 57 mm clamping position. See Table 29.

Table 29 — Clamping position for projectiles with suction cup

ISO 8124-1	EN 71-1	ASTM F963
Attach a clamp on the shaft such that the edge of the clamp is at a point (57^{+1}_{0}) mm or the maximum distance (if less than 57 mm) from the contact surface of the projectile 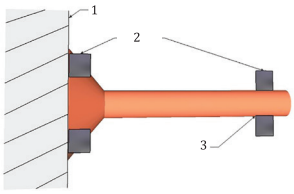	The distance from the end of the suction cup to the front edge of the clamp shall be (57^{+5}_{0}) mm or the maximum distance (if less than 57 mm) 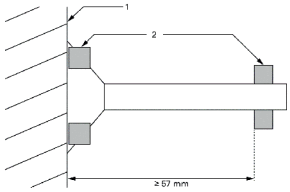	Place a clamp on the shaft such that the edge of the clamp is at a point (57 ± 1) mm or the maximum distance (if less than 57 mm) from the tip of the projectile 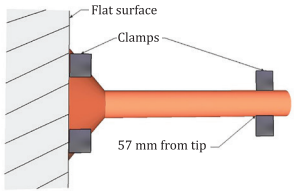

6.4 Material

The clauses specifying requirements related to material properties are outlined in the Table 30.

Table 30 — Clauses related to material properties

ISO 8124-1	EN 71-1	ASTM F963
4.3 Material 4.3.1 Material quality See E.4	4.1 Material cleanliness (See A.3) 5.2 Soft-filled toys and soft-filled parts of a toy (See A.27)	4.1 Material quality 4.3.7 Stuffing materials
4.3.2 Expanding materials See E.5 5.21 Expanding materials	4.6 Expanding materials (See A.7) 8.14 Expanding materials (See 4.6)	4.40 Expanding materials

© ISO 2020 – All rights reserved
Documents
Document Sharing Hub
Full document details: ISO TR 08124-9-2020

Table 30 *(continued)*

ISO 8124-1	EN 71-1	ASTM F963
4.6.1 Accessible sharp edges of glass or metal	4.5 Glass (See 5.7 and A.6) 5.7 Glass and porcelain (See 4.5 and A.6)	4.7.1 Potentially hazardous sharp metal and glass edges are defined in 16 CFR 1500.49

6.4.1 Fillings

For toys intended for children under 36 months, EN 71-1 requires that fillers shall not contain any hard and sharp contaminants such as pieces of metal, nails, needles and splinters. ASTM F963 also requires that loose fillers for stuffed toys shall be free of objectionable matter originating from insect, bird, rodent, or other animal infestation and of contaminants such as splinters, glass and metal chips to the extent possible in good manufacturing practice. ISO 8124-1 requires that all materials shall be visually clean and free from infestation.

In EN 71-1 and ISO 8124-1, filler shall be assessed visually by the unaided eye rather than under magnification. ASTM F963 requires that a visual inspection shall be performed on a representative sample of the stuffing material using a stereo widefield microscope, or equivalent, at 10× magnification and adequate illumination.

In EN 71-1, soft-filled toys and soft-filled parts of a toy containing small parts (e.g. rattling components, bells, shredded foam) or with filler from which pieces can be bitten or torn thereby producing small parts, shall have at least one covering so that, after tension testing of the seams and materials, it shall not be possible to insert the front part of probe A through any one opening in the seam or cover material. Soft-filled toys and soft-filled parts of a toy containing fibrous filler material shall have at least one covering such that, after tension testing of the seams and materials, it shall not be possible to insert the front part of a 12 mm diameter rod with a fully radiused end through any one opening in the seam or cover material by more than 6 mm. In ISO 8124-1 and ASTM F963 there is no requirement for a cover of the filler(s).

6.4.2 Expanding materials

In EN 71-1 and ISO 8124-1, toys and components of toys which fit entirely in the small parts cylinder shall not expand more than 50 % in any direction after a 24 h, 48 h or 72 h soaking test. In EN 71-1, if the expanding material is enclosed by a material intended to break during soaking, the requirement shall also be met when the test is performed after the removal of the breakable material. There is no corresponding requirement in ISO 8124-1 to remove a breakable enclosing material.

ASTM F963 requires that toys and components of toys which fit entirely in the small parts cylinder and which expand more than 50 % in any direction after conditioning and a 6 h, 24 h, 48 h or 72 h soaking test shall completely pass through the gauge specified in Figure 1 when tested as specified in ASTM F963. If the toy or component exhibits expansion equal to or less than 50 % in all dimensions from its as-received state, at all measurement time intervals, the toy or component is classified as not containing or being composed of an expanding material and no further related testing is required.

© ISO 2020 – All rights reserved

Documents
Document Sharing Hub
Full document details: ISO TR 08124-9-2020

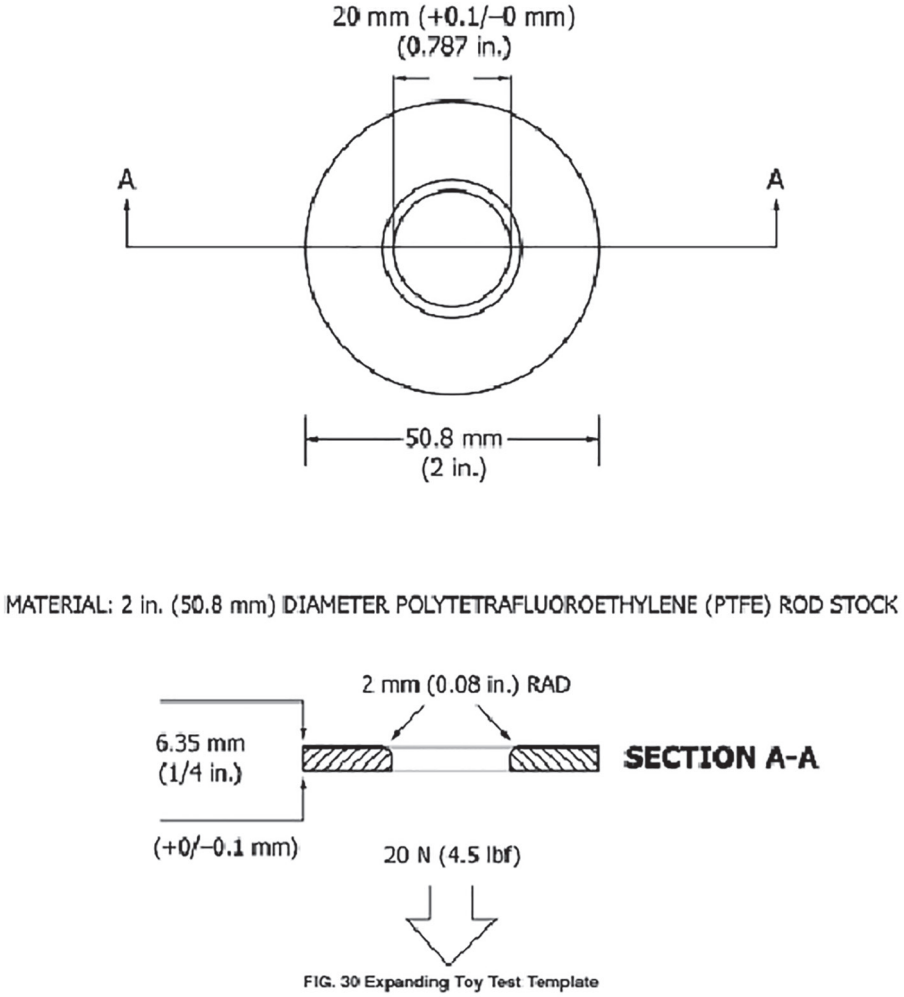

Figure 1 — Expanding Toy Test Template

6.4.3 Glass and porcelain

EN 71-1 limits the scope of the requirements to accessible glass and porcelain; however, it also states that glass shall not be used in the construction of toys intended for children under 36 months. EN 71-1 permits the use of accessible glass in toys intended for children 36 months and over where:

a) its use is necessary for the function of the toy;

b) it does not produce hazardous sharp edges or hazardous sharp points after the drop and impact tests.

ISO 8124-1 and ASTM F963 refer to “accessible edges of glass or metal” as shown in the Table 31.

Table 31 — Sharpness requirements for accessible glass edges

	Under 36 months	36 months and over, but under 96 months	96 months and over, but under 14 years
ISO 8124-1	After normal use tests and reasonably foreseeable abuse tests, accessible edges on toys intended for children under 96 months shall not be hazardous sharp edges of glass		Toy shall not present hazardous sharp edges of glass after normal use tests

© ISO 2020 – All rights reserved
Documents
Document Sharing Hub
Full document details: ISO TR 08124-9-2020

Table 31 *(continued)*

	Under 36 months	36 months and over, but under 96 months	96 months and over, but under 14 years
EN 71-1	Accessible glass and accessible porcelain shall not be used in the construction of toys intended for children under 36 months	Accessible glass may be used in the construction of toys for children of 36 months and over where: a) its use is necessary to the function of the toy b) it is textile glass used for reinforcement c) it is in the form of solid glass marbles or solid glass eyes for dolls d) it is in the form of other glass elements that after being subjected to drop and impact tests do not expose accessible hazardous sharp edges or accessible hazardous sharp points	
ASTM F963	Toys shall not have accessible, potentially hazardous sharp edges. Toys intended for use by children under 8 years of age are subject to these requirements before or after use and abuse testing, or both		Toy shall not have accessible, potentially hazardous sharp edges after normal use tests

6.5 Small parts

6.5.1 General

The clauses specifying the requirements related to small parts are indicated in Table 32.

Table 32 — Clauses related to small parts

ISO 8124-1	EN 71-1	ASTM F963
4.4 Small parts See E.6 4.4.1 For children under 36 months 5.2 Small parts test	5 Toys intended for children under 36 months 5.1 General requirements (see A.26) 8.2 Small parts cylinder (see 4.6, 4.11, 4.18, 4.23.2, 4.23.3, 4.25, 5.1, 5.2 and A.36) 8.9 Soaking test (see 4.11, 4.23.2, 5.1, 5.10 and 5.12)	4.6 Small objects 4.6.1 Toys that are intended for children under 36 months of age 5.8 Toys intended to be assembled by an adult
4.4.2 For children 36 months and over but under 72 months B.2.3 Toys that are small parts, toys containing small parts and toys with removable small part components 5.2 Small parts test	7.2 Toys not intended for children under 36 months (see 4.22 and A.34)	4.6.3 Toys and games that are intended for use by children who are at least three years old (36 months) but less than six years of age (72 months)

6.5.2 Small parts exemptions

The small part exemptions are similar across the referenced standards, as shown in Table 33. ASTM F963 identifies elastic as exempt. ISO 8124-1 and EN 71-1 indicate that felt and elastic fabric are exempt from the small parts requirements. In ISO 8124-1 and EN 71-1, elastic polymeric materials that are interwoven in an elasticized fabric, as well as elasticized thread sewn in to a fabric, are excluded from the requirements of small parts. However, elastic polymeric materials (e.g. rubber bands) that are not interwoven in, or sewn into, a piece of fabric material are not excluded from the small parts requirements.

ISO 8124-1 and EN 71-1 do not exempt tightly packed stuffed components made of fabric or textile.

© ISO 2020 – All rights reserved

AVA Documents Document Sharing Hub
Full document details: ISO TR 08124-9-2020

For toys intended for children under 36 months, EN 71-1 specifies that attached paperboard components of toys that detach after a tension test shall not be considered small parts. In ISO 8124-1, toys, components of toys and removable components made entirely of paperboard that do not fit entirely in the small part cylinder are exempt from foreseeable abuse tests.

Table 33 — Small parts exemptions

ISO 8124-1	EN 71-1	ASTM F963
Paper books and other articles made of paper and pieces of paper	Paper	Pieces of paper Books and other paper articles
Writing materials such as crayons, chalk, pencils and pens	Crayons, chalks, pencils and similar writing and drawing implements without removable components	Writing materials (crayons, chalk, pencils, and pens)
Modelling clay and similar products	Modelling clay and similar products	Modelling clay and similar products
Fingerpaints, water colours, paint sets and paint brushes	—	Fingerpaints, watercolors, and other paint sets
Fuzz	Fuzz	Fuzz
Fibrous filling material	—	—
Balloons	Balloons	Balloons
Textile fabric, including non-woven fabric such as felt	Fabric (including felt and elastic fabric)	Fabric
Yarn	Yarn	Yarn
Elastic fabric	Elastic fabric	Elastic
String	String	String
Audio and/or video discs which are not themselves small parts	—	Phonograph records and compact discs (CDs)

6.5.3 Test methods

The gauges and tests for small parts are essentially aligned across the referenced standards (see Table 34). There are minor dimensional differences for the gauge in ASTM F963 due to a lack of tolerances in the specification.

Table 34 — Small parts cylinders

ISO 8124-1	EN 71-1	ASTM F963
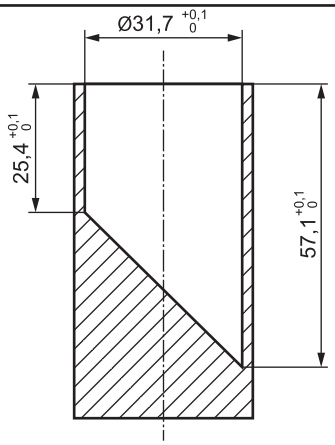	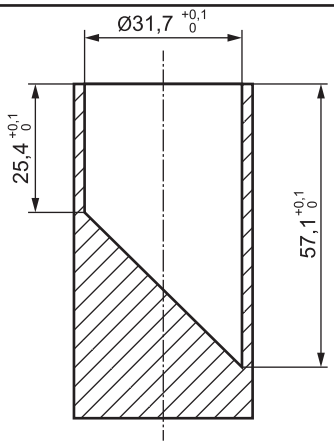	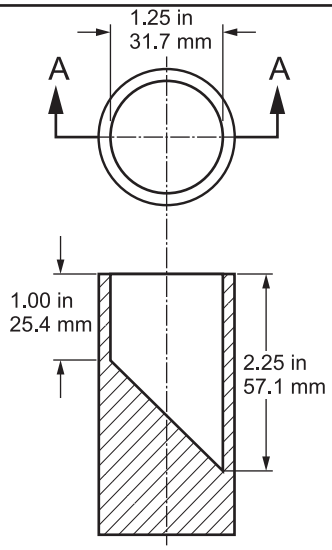

© ISO 2020 – All rights reserved
Documents
Document Sharing Hub
Full document details: ISO TR 08124-9-2020

6.6 Shape, size and strength of certain toys

6.6.1 General

The clauses for shape, size and strength of certain toys in the referenced standards are indicated in Table 35.

Table 35 — Clauses relating to the shape, size and strength of certain toys

ISO 8124-1	EN 71-1	ASTM F963
4.5 Shape, size and strength of certain toys See E.7 4.5.1 Squeeze toys, rattles, fasteners, and certain other toys and components of toys 4.5.1.1 General 4.5.1.2 Squeeze toys, rattles, and certain other toys and components of toys 4.5.1.3 Other toys or components of toys with nearly spherical, hemispherical, circular flared, or dome-shaped ends of toys having a mass less than 0,5 kg and intended for children under 18 months See E.7 5.3 Test for shape and size of certain toys	5.8 Shape and size of certain toys (see A.31) 8.16 Geometric shape of certain toys (see 5.8, 5.11 and A.43)	4.22 Teethers and teething toys 4.23 Rattles 4.24 Squeeze toys 4.32 Certain toys with nearly spherical ends 4.32.1 Nearly spherical, hemispherical, circular flared, or dome-shaped ends of toys or components of toys
4.5.1.4 Toy fasteners (e.g. nails, bolts, screws, and pegs) with nearly spherical, hemispherical, or dome-shaped ends intended for children 18 months and over but under 48 months	—	4.32.2 Nearly spherical, hemispherical, or dome-shaped ends of toy fasteners (for example, nails, bolts, screws, pegs)
4.5.2 Small balls 5.4 Small balls test B.2.5 Small balls and marbles	4.22 Small balls (see 5.10 and A.48) 5.10 Small balls (see also 4.22 and A.48) 8.32 Small balls and suction cups test (see 4.17, 4.22, 4.25, 5.10 and 5.13) 8.32.1 Small balls and suction cups test (see Clause 6) 8.32.2 Small balls attached to a toy by a cord 7.2 Toys not intended for children under 36 months (see 4.22 and A.34)	4.34 Balls 4.34.1 Balls intended for children under 36 months of age 4.34.2 Toys intended for children at least 3 years old but less than 8 years of age that contain a loose small ball 5.11.3 For any small ball intended for children 3 years of age or older
4.5.3 Pompoms 5.5 Test for pompoms 5.24.6.3 Tension test for pompoms	—	4.35 Pompoms 8.16 Pompoms are subjected to the torque test as described in 8.8 and 8.8.1 and the tension test as described herein

© ISO 2020 – All rights reserved

Documents
Document Sharing Hub
Full document details: ISO TR 08124-9-2020

Table 35 *(continued)*

ISO 8124-1	EN 71-1	ASTM F963
4.5.4 Pre-school play figures 5.6 Test for pre-school play figures	5.11 Play figures 8.33 Test for play figures (see 5.11)	4.32.3 Preschool play figures
4.5.5 Toy pacifiers	—	4.20.2 Toy pacifiers attached to, or sold with, toys intended for children under 36 months of age
4.5.6 Balloons B.2.4 Balloons	4.12 Balloons (see 4.3 and A.16) 7.3 Latex balloons (see 4.12 and A.16)	4.31 Balloons – Packages containing latex balloons and toys or games containing latex balloons 5.11.5 For any latex balloon or any toy or game that contains a latex balloon
4.5.7 Marbles B.2.5 Small balls and marbles	Marble is covered by the definition of "balls" in EN 71-1	4.33 Marbles 5.11.4 For any marble intended for children 3 years of age or older
4.5.8 Hemispheric-shaped toys See E.41	5.12 Hemispheric-shaped toys (see A.50)	4.36 Hemispheric-shaped objects
—	5.13 Suction cups (see A.54)	—

6.6.2 Squeeze toys, rattles and certain other toys

See Table 36.

a) EN 71-1 has a broader scope than ISO 8124-1 and ASTM F963 in terms of product categories. EN 71-1:2014+A1:2018, 5.8, generally applies to toys for children who are unable to sit up unaided, while ISO 8124-1 applies to specific toy categories. ASTM F963 applies to rattles, squeeze toys, teethers and teething rings only.

b) In EN 71-1, the requirement for shape and size of certain toys does not apply to rigid elements having a major dimension of 30 mm or less. In ASTM F963, rigid components having a major dimension of 1,2 in. (30 mm) or less contained within soft-filled toys are exempt from the size and shape requirement for teethers and teething toys, rattles and squeeze toys. There is no corresponding exemption in ISO 8124-1.

c) The shape and size requirements in EN 71-1 apply to toys intended for children who are unable to sit up unaided where the toy or toy part weighs less than 0,5 kg. The scope of ISO 8124-1 is broader in terms of the age range (under 18 months) for squeeze toys, teethers and teething toys, but it aligns with EN 71-1 for the removable components of toys intended to be strung across a crib, playpen or perambulator and for the removable components of baby gyms (under 6 months), and rattles (children who are unable to sit up unaided).

© ISO 2020 – All rights reserved
Documents
Document Sharing Hub
Full document details: ISO TR 08124-9-2020

Table 36 — Squeeze toys, rattles and certain other toys

ISO 8124-1	EN 71-1	ASTM F963
4.5.1 Squeeze toys, rattles, fasteners, and certain other toys and components of toys Exemption: Soft-filled (stuffed) toys or soft-filled parts of toys or parts made entirely of fabric	5.8 Shape and size of certain toys Exemption: Soft-filled parts of a toy or parts of fabric Rigid elements having a major dimension equal to 30 mm or less	4.22 Teethers and teething toys Exemption: (1) Teething toys that are composed of liquid-filled beads that are attached to form a ring or beads that are threaded on a flexible cord or string (2) Soft-filled (stuffed) teething toys or soft-filled parts or parts of fabric (3) Rigid components having a major dimension equal to or less than 1,2 in. (30 mm) contained within soft-filled teething toys 4.23 Rattles Exemption: (1) Soft-filled (stuffed) rattles or soft-filled parts or parts of fabric (2) Rigid components having a major dimension equal to or less than 1,2 in. (30 mm) contained within soft-filled rattles 4.24 Squeeze toys Exemption: (1) Soft-filled (stuffed) squeeze toys or soft-filled parts or parts of fabric (2) Rigid components having a major dimension equal to or less than 1,2 in. (30 mm) contained within soft-filled squeeze toys
Scope	**Scope**	
Squeeze toys intended for children under 18 months Rattles	Rattle-shaped toys and squeeze toys with or without noise making features	
Teethers and teething toys intended for children under 18 months;	Teethers, toys or components intended to be chewed on	
Legs of baby gyms intended for children under 18 months	Legs of baby gyms	
Removable components of toys intended to be strung across a crib, playpen or perambulator (if they have a mass less than 0,5 kg and are intended for children under 6 months)	Removable components of toys intended to be strung across a crib, playpen or perambulator	
Removable components of baby gyms (if they have a mass less than 0,5 kg and are intended for children under 6 months)	Removable components of baby gyms	
—	Hand-held activity toys	
—	Books and building blocks covered by textile or vinyl	

d) ISO 8124-1 and ASTM F963 have a requirement for toy fasteners with nearly spherical, hemispherical or domed-shaped ends which are intended for children over 18 months but less than 48 months. EN 71-1 does not set requirements for toy fasteners.

6.6.3 Small balls

a) All three standards prohibit small balls in toys intended for children under 36 months. EN 71-1 does not apply to soft-filled balls. In all three standards, a small ball is any ball that passes entirely through the template when tested in accordance with the small ball test. Only EN 71-1 includes balls attached to a toy by a cord.

b) The differences between warning statements for small balls are shown in Table 37.

Table 37 — Differences in warnings for small balls

	Age grade	Warning
ISO 8124-1	Toys intended for children 36 months and over, but under 96 months	"Warning! Not suitable for children under 3 years. Small ball(s). Choking hazard."
NOTE EN 71-1 includes the following: 'The provisions in 7.2 do not apply to toys which, on account of their function, dimensions, characteristics, properties or other cogent grounds, are clearly unsuitable for children under 36 months.'		

© ISO 2020 – All rights reserved

Documents
Document Sharing Hub
Full document details: ISO TR 08124-9-2020

Table 37 *(continued)*

	Age grade	Warning
EN 71-1	Toys not intended for children under 36 months	"Warning. Not suitable for children under 36 months. Small balls" (see Note)
ASTM F963	For any small ball intended for children 3 years of age or older	⚠ WARNING: CHOKING HAZARD–This toy is a small ball. Not for children under 3yrs.
	For any toy or game intended for children who are at least 3 years old but less than 8 years of age that contains a small ball	⚠ WARNING: CHOKING HAZARD–Toy contains a small ball. Not for children under 3yrs.
NOTE EN 71-1 includes the following: 'The provisions in 7.2 do not apply to toys which, on account of their function, dimensions, characteristics, properties or other cogent grounds, are clearly unsuitable for children under 36 months.'		

6.6.4 Pompoms

ASTM F963 and ISO 8124-1 apply different tension forces for a pompom connected to a toy: 70 N ± 2 N for ISO 8124-1 and 67 N for ASTM F963. EN 71-1 does not contain a corresponding requirement for pompoms.

6.6.5 Toy pacifiers

In ASTM F963, toy pacifiers attached to or sold with toys intended for children under 36 months of age shall either conform to the requirements of 16 CFR 1511 or have a nipple length no longer than 0,63 in. (16 mm). ISO 8124-1 only specifies that toy pacifiers attached to or sold with toys intended for children under 36 months shall have a nipple length no longer than 16 mm. EN 71-1 does not include specific requirements for toy pacifiers.

NOTE Toy pacifiers with toys intended for children under 36 months of age are subject to the small parts requirements in the three referenced standards.

6.6.6 Balloons

All three referenced standards set suffocation hazard warning requirements for latex balloon packaging. Further, if a balloon is made of natural rubber latex, EN 71-1 requires the package to display the statement "Made of natural rubber latex". In EN 71-1, there is an explicit statement indicating that if there is no packaging, the information shall be on the balloons and/or on a leaflet accompanying the balloons. There is no such statement in the ISO 8124-1 and ASTM F963.

6.6.7 Marbles

The differences between warning statements for marbles are shown in Table 38.

Table 38 — Differences in warnings for marbles

	Age grade	Warning
ISO 8124-1	Toys intended for children 36 months and over, but under 96 months	"Warning! Not suitable for children under 3 years. Marble(s). Choking hazard."
EN 71-1	Toys not intended for children under 36 months	"Warning. Not suitable for children under 36 months. Small balls." (see Note)
NOTE EN 71-1 includes the following: 'The provisions in 7.2 do not apply to toys which, on account of their function, dimensions, characteristics, properties or other cogent grounds, are clearly unsuitable for children under 36 months.'		

© ISO 2020 – All rights reserved
Documents
Document Sharing Hub
Full document details: ISO TR 08124-9-2020

Table 38 *(continued)*

	Age grade	Warning
ASTM F963	For any marble intended for children 3 years of age or older	⚠ WARNING: CHOKING HAZARD–This toy is a marble. Not for children under 3yrs.
	For any toy or game intended for children who are at least 3 years of age but less than 8 years of age that contains a marble	⚠ WARNING: CHOKING HAZARD–Toy contains a marble. Not for children under 3yrs.
NOTE EN 71-1 includes the following: 'The provisions in 7.2 do not apply to toys which, on account of their function, dimensions, characteristics, properties or other cogent grounds, are clearly unsuitable for children under 36 months.'		

6.6.8 Hemispheric-shaped toys

Hemispheric-shaped toys for holding liquids which are intended for children 2 years and older are exempted in ISO 8124-1 and ASTM F963, but they are not exempt in EN 71-1. ASTM F963 also has an exemption for objects intended for drinking. See Table 39.

EN 71-1 applies the requirements to hemispheric-shaped containers that are packaging elements of toys for children under 36 months; these containers are exempted in ASTM F963 and ISO 8124-1 only where they are intended to be discarded after the toy is removed from the package. See Table 40.

Table 39 — Exemptions from hemispheric-shaped toy requirements

ISO 8124-1	EN 71-1	ASTM F963
Hemispheric-shaped toys	Hemispheric-shaped toys	Hemispheric-shaped objects
—	—	Objects intended for drinking (for example, tea cup)
Objects intended to hold liquids in products appropriate for children of 24 months and over (e.g. pots and pans)	—	Objects intended to hold liquids in products appropriate for children at least 2 years old (for example, pots and pans)
Containers which must be airtight so that the contents can maintain their functional integrity (e.g. modelling clay containers)	Containers that need to be airtight so the contents can maintain their functional integrity (e.g. modelling clay containers)	Containers that shall be airtight so the contents can maintain their functional integrity (for example, modelling clay containers.)
Components of larger products which do not become detached when tested in accordance with 5.24 (e.g. a bowl-shaped smoke stack which is permanently attached to a toy train, or a swimming pool which is moulded into a larger toy playscape)	Components of larger products (e.g. bowl-shaped smoke stack that is permanently attached to a toy train or a swimming pool that is moulded into a larger toy playscape) that do not become detached when tested according to 8.3 (torque test), 8.4.2.1 (tension test, general), 8.5 (drop test), 8.7 (impact test) and 8.8 (compression test) and for glued wooden toys 8.9 (soaking test). For large and bulky toys, the drop test is substituted by 8.6 (tip over test)	Non-detachable (as determined by testing in accordance with 8.6 to 8.10 of this specification) components of larger products (for example, bowl-shaped smoke stack that is permanently attached to a toy train or a swimming pool that is moulded into a larger toy playscape)

© ISO 2020 – All rights reserved

Documents
Document Sharing Hub
Full document details: ISO TR 08124-9-2020

Table 39 *(continued)*

ISO 8124-1	EN 71-1	ASTM F963
Containers that are part of packaging intended to be discarded once the toy is removed from the packaging	— NOTE See also the requirement in 6 e) regarding packaging which is hemispheric-shaped 6 e) The requirements in 5.12 (hemispheric shaped toys) apply to hemispheric-shaped containers that are part of the packaging for toys intended for children under three	Containers that are part of the retail package intended to be discarded once the toy is removed from the package

Table 40 — Hemispheric-shaped toy requirements

ISO 8124-1	EN 71-1	ASTM F963
Requirements for hemispheric-shaped toys	Requirements for hemispheric-shaped toys	Requirements for hemispheric-shaped objects
4.5.8 a-d	5.12 a-d	4.36.6 a-d
—	—	(e) Have an opening with a minor dimension of at least 0,66 in. (17 mm) located anywhere in the base or in the side wall of the object. If the opening is located in the sidewall of the object, the edge of the opening shall be at least 0,5 in. (13 mm) from the rim as measured along the outside contour

6.6.9 Suction cups

EN 71-1 sets a size requirement (template E) for loose, separable or detachable suction cups on toys intended for children under 36 months. ISO 8124-1 and ASTM F963 do not have a similar requirement.

6.6.10 Test templates

The test template dimensions are the same in EN 71-1 and ISO 8124-1, but there are minor dimensional differences for the templates in ASTM F963 due to a lack of tolerances in the specifications. See Table 41.

Table 41 — Test templates

	ISO 8124-1	EN 71-1	ASTM F963
Template A **(Rattle Test Fixture in ASTM F963)**	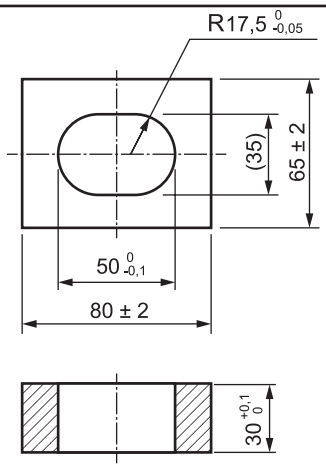	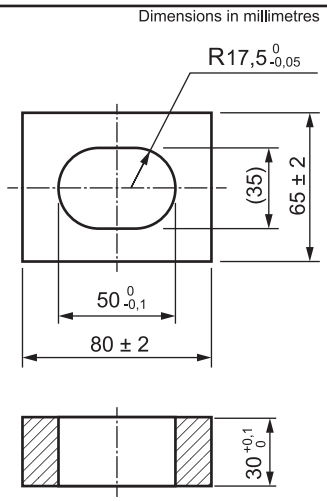	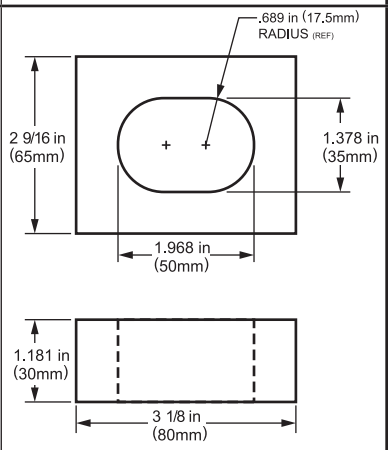

© ISO 2020 – All rights reserved
Documents
Document Sharing Hub
Full document details: ISO TR 08124-9-2020

Table 41 *(continued)*

	ISO 8124-1	EN 71-1	ASTM F963
Template B **(Supplemental Test Fixture for Rattles, Squeeze Toys, and Teethers in ASTM F963)**	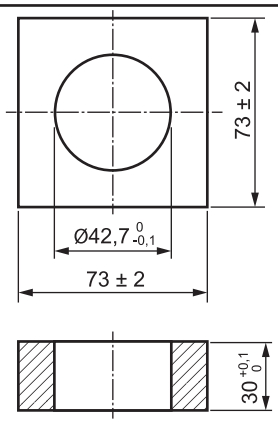	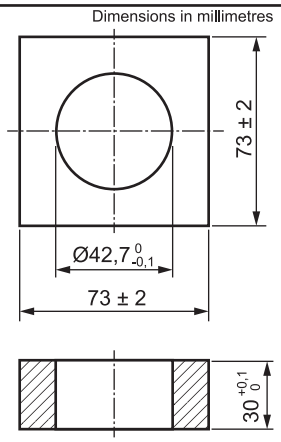	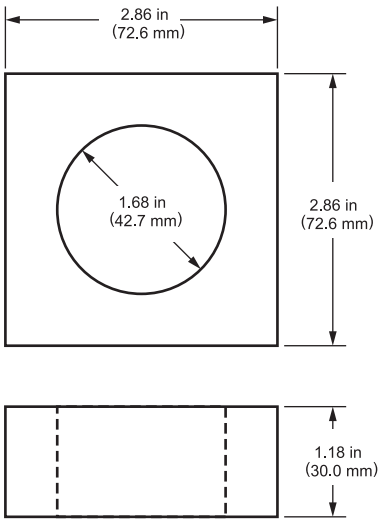
Template C (Template E for EN 71-1) **(Test Fixture for Small Balls in ASTM F963)**	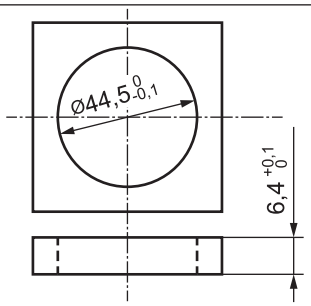	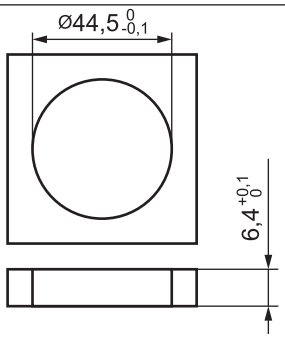	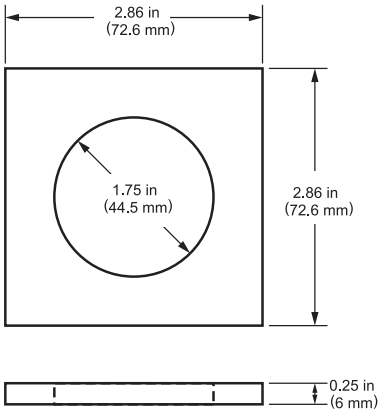

6.7 Edges

6.7.1 General

The clauses for sharp edge requirements are indicated in Table 42.

Table 42 — Clauses related to sharp edges

ISO 8124-1	EN 71-1	ASTM F963
4.6 Edge See E.11 4.6.1 Accessible sharp edges of glass or metal 5.8 Sharp-edge test	4.7 Edges (see A.8) 4.7 a) (metal and glass edges only) 4.7 b) 5.1 b) 8.11 Sharpness of edges	4.7.1 Potentially hazardous sharp metal and glass edges5.8 Toys Intended to be assembled by an adult
4.6.2 Functional sharp edges B.2.12 Toys with functional sharp edges and functional sharp points	4.7 d) 7.6 Hazardous sharp functional edges and points (see 4.7 and 4.8)	4.7.2 Toys containing potentially hazardous edges that are a necessary part of the function of a toy 5.10 Toys with functional sharp edges or points
4.6.3 Edges on metal toys	4.7 a), b), c)	4.7.3 Metal toys
4.6.4 Edges on moulded toys	4.7 c)	4.7.4 Moulded toys

© ISO 2020 – All rights reserved

Documents
Document Sharing Hub
Full document details: ISO TR 08124-9-2020