TECHNICAL REPORT

ISO/TR 16312-2

Second edition
2021-01

Guidance for assessing the validity of physical fire models for obtaining fire effluent toxicity data for fire hazard and risk assessment —

Part 2: Evaluation of individual physical fire models

Lignes directrices pour évaluer la validité des modèles de feu physiques pour l'obtention de données sur les effluents du feu en vue de l'évaluation des risques et dangers —

Partie 2: Évaluation des différents modèles de feu physiques

Reference number
ISO/TR 16312-2:2021(E)

AVA Documents
Document Sharing Hub

© ISO 2021

Full document details: ISO TR 16312-2-2021

COPYRIGHT PROTECTED DOCUMENT

© ISO 2021

All rights reserved. Unless otherwise specified, or required in the context of its implementation, no part of this publication may be reproduced or utilized otherwise in any form or by any means, electronic or mechanical, including photocopying, or posting on the internet or an intranet, without prior written permission. Permission can be requested from either ISO at the address below or ISO's member body in the country of the requester.

ISO copyright office
CP 401 • Ch. de Blandonnet 8
CH-1214 Vernier, Geneva
Phone: +41 22 749 01 11
Email: copyright@iso.org
Website: www.iso.org

Published in Switzerland

© ISO 2021 – All rights reserved

Documents
Document Sharing Hub

Full document details: ISO TR 16312-2-2021

Contents

Page

Foreword ..... **v**
Introduction ..... **vi**
1 Scope **1**
2 Normative references **1**
3 Terms and definitions **1**
4 General principles **2**
4.1 Physical fire model 2
4.2 Model validity 2
4.3 Test specimens 2
4.4 Combustion conditions 2
4.5 Effluent characterization 2
5 Significance and use **3**
6 Physical fire models **3**
6.1 Smoke chambers - Closed cabinet toxicity tests (international) 3
6.1.1 NBS smoke chamber 3
6.1.2 ISO smoke chamber 5
6.2 NES 713 (United Kingdom) 7
6.2.1 Application 7
6.2.2 Principle 7
6.2.3 Fire stage(s) 8
6.2.4 Types of data 8
6.2.5 Presentation of results 8
6.2.6 Apparatus assessment 8
6.2.7 Toxicological results 8
6.2.8 Miscellaneous 9
6.2.9 Validation 9
6.2.10 Conclusion 9
6.3 Rotative cages smoke toxicity tests 10
6.3.1 Japanese and Korean methods 10
6.3.2 Chinese method 12
6.4 Cone calorimeter (international) 14
6.4.1 Application 14
6.4.2 Principle 15
6.4.3 Fire stage(s) 15
6.4.4 Types of data 15
6.4.5 Presentation of results 15
6.4.6 Apparatus assessment 15
6.4.7 Toxicological results 16
6.4.8 Validation 16
6.4.9 Conclusion 16
6.5 Flame propagation apparatus (International) 17
6.5.1 Application 17
6.5.2 Principle 17
6.5.3 Fire stage(s) 18
6.5.4 Types of data 18
6.5.5 Presentation of results 18
6.5.6 Apparatus assessment 18
6.5.7 Toxicological results 19
6.5.8 Miscellaneous 19
6.5.9 Validation 19
6.5.10 Conclusion 19
6.6 Tube furnace methods 20

© ISO 2021 – All rights reserved

AVA Documents
Document Sharing Hub
Full document details: ISO TR 16312-2-2021

6.6.1 Static tube furnace (International) 20
6.6.2 Tube furnace (Germany) 23
6.6.3 ISO/TS 19700 Tube furnace (International) 26

7 Summary of test methods 29

Annex A (informative) **Deprecated methods 33**

Bibliography 43

© ISO 2021 – All rights reserved

Documents
Document Sharing Hub
Full document details: ISO TR 16312-2-2021

Foreword

ISO (the International Organization for Standardization) is a worldwide federation of national standards bodies (ISO member bodies). The work of preparing International Standards is normally carried out through ISO technical committees. Each member body interested in a subject for which a technical committee has been established has the right to be represented on that committee. International organizations, governmental and non-governmental, in liaison with ISO, also take part in the work. ISO collaborates closely with the International Electrotechnical Commission (IEC) on all matters of electrotechnical standardization.

The procedures used to develop this document and those intended for its further maintenance are described in the ISO/IEC Directives, Part 1. In particular, the different approval criteria needed for the different types of ISO documents should be noted. This document was drafted in accordance with the editorial rules of the ISO/IEC Directives, Part 2 (see www.iso.org/directives).

Attention is drawn to the possibility that some of the elements of this document may be the subject of patent rights. ISO shall not be held responsible for identifying any or all such patent rights. Details of any patent rights identified during the development of the document will be in the Introduction and/or on the ISO list of patent declarations received (see www.iso.org/patents).

Any trade name used in this document is information given for the convenience of users and does not constitute an endorsement.

For an explanation of the voluntary nature of standards, the meaning of ISO specific terms and expressions related to conformity assessment, as well as information about ISO's adherence to the World Trade Organization (WTO) principles in the Technical Barriers to Trade (TBT), see www.iso.org/iso/foreword.html.

This document was prepared by Technical Committee ISO/TC 92, *Fire safety*, Subcommittee SC 3, *Fire threat to people and environment*.

This second edition cancels and replaces the first edition (ISO/TR 16312-2:2007) which has been technically revised.

The main changes compared to the previous edition are as follows:

— fire models have been updated following the publication of certain other standards, including ISO/TS 19021 and ISO/TS 5660-5;

— deprecated methods have been moved to Annex A.

A list of all parts in the ISO 16312 series can be found on the ISO website.

Any feedback or questions on this document should be directed to the user's national standards body. A complete listing of these bodies can be found at www.iso.org/members.html.

© ISO 2021 – All rights reserved

Documents
Document Sharing Hub
Full document details: ISO TR 16312-2-2021

Introduction

Providing the desired degree of life safety for an occupancy increasingly involves an explicit fire hazard or risk assessment. This assessment includes such components as information on the room/building properties, the nature of the occupancy, the nature of the occupants, the types of potential fires, the outcomes to be avoided, etc.

This type of determination also requires information on the potential for harm to people due to the effluent produced in the fire. Because of the prohibitive cost of real-scale product testing under the wide range of fire conditions, most estimates of the potential harm from the fire effluent depend on data generated from a physical fire model, a reduced-scale test apparatus and procedure for its use.

The role of a physical fire model for generating accurate toxic effluent composition is to simulate the essential features of the complex thermal and reactive chemical environment in full-scale fires. These environments vary with the physical characteristics of the fire scenario and with time during the course of the fire, and close representation of some phenomena occurring in full-scale fires can be difficult or even not possible on a small scale. The accuracy of the physical fire model, then, depends on two features:

a) the degree to which the combustion conditions in the bench-scale apparatus mirror those in the fire stage being simulated;

b) the degree to which the yields of the important combustion products obtained from the burning of the commercial product at full scale are matched by the yields from burning specimens of the product in the small-scale model. This measure is generally performed for a small set of products, and the derived accuracy is then presumed to extend to other test subjects. Since the publication of the first edition of this document, in which a methodology for effecting this comparison was cited in Reference [1], ISO 29903-1 has been developed.

This document provides a set of technical criteria for evaluating physical fire models used to obtain composition and toxic potency data on the effluent from products and materials under fire conditions relevant to life safety. This document covers the application by experts of these criteria to currently used test methods that are used for generating data on smoke effluent from burning materials and commercial products.

There are 10 physical fire models discussed in this document, plus 4 depreciated methods in Annex A. Additional apparatus can be added as they are developed or adapted with the intent of generating information regarding the toxic potency of smoke.

For all models in this document, several are closed systems. In these, no external air is introduced and the combustion (or pyrolysis) products remain within the apparatus except for the fraction removed for chemical analysis. The second seven are open apparatus, with air continuously flowing past the combusting sample and exiting the apparatus, along with the combustion products.

Reference documents useful for discussions of analytical methods, bioassay procedures, and prediction of the toxic effects of fire effluents are listed in the Bibliography at the end of this document.

© ISO 2021 – All rights reserved
Documents
Document Sharing Hub
Full document details: ISO TR 16312-2-2021

Guidance for assessing the validity of physical fire models for obtaining fire effluent toxicity data for fire hazard and risk assessment —

Part 2: Evaluation of individual physical fire models

1 Scope

This document assesses the utility of physical fire models that have been standardized, are commonly used, and/or are cited in national or international standards, for generating fire effluent toxicity data of known accuracy. This is achieved by using the criteria established in ISO 16312-1 and the guidelines established in ISO 19706. The aspects of the models that are considered are: the intended application of the model, the combustion principles it manifests, the fire stage(s) that the model attempts to replicate, the types of data generated, the nature and appropriateness of the combustion conditions to which test specimens are exposed, and the degree of validity established for the model.

2 Normative references

The following documents are referred to in the text in such a way that some or all of their content constitutes requirements of this document. For dated references, only the edition cited applies. For undated references, the latest edition of the referenced document (including any amendments) applies.

ISO 13943, *Fire safety — Vocabulary*

ISO 19703, *Generation and analysis of toxic gases in fire — Calculation of species yields, equivalence ratios and combustion efficiency in experimental fires*

3 Terms and definitions

For the purposes of this document, the terms and definitions given in ISO 13943 and ISO 19703 and the following apply.

ISO and IEC maintain terminological databases for use in standardization at the following addresses:

— ISO Online browsing platform: available at https://www.iso.org/obp

— IEC Electropedia: available at http://www.electropedia.org/

3.1
vitiation-controlled
type of conditions under which the volume concentration of oxygen is intentionally controlled or reduced in the combustion environment

Note 1 to entry: Vitiation controlled conditions represent an oxygen depleted fire environment.

[SOURCE: ISO/TS 5660-5:2020, 3.3, modified.]

© ISO 2021 – All rights reserved

Documents
Document Sharing Hub
Full document details: ISO TR 16312-2-2021

3.2
ventilation-controlled
type of conditions un which the supply rate of (ambient or vitiated) air to the combustion environment is intentionally controlled or limited

Note 1 to entry: Ventilation-controlled conditions represent a fire environment with limited fresh air supply.

[SOURCE: ISO/TS 5660-5:2020, 3.4, modified.]

4 General principles

4.1 Physical fire model

A physical fire model is characterized by the requirements placed on the form of the test specimen, the operational combustion conditions and the capability of analysing the products of combustion.

4.2 Model validity

For use in providing data for effluent toxicity assessment, the validity of a physical fire model is determined by the degree of accuracy with which it reproduces the yields of the principal toxic components in real-scale fires.

ISO 12828-1, ISO 12828-2 and ISO/TS 12828-3 are guidance documents for model validity. This includes limits of detection and quantification, range of application, trueness and fidelity in terms of repeatability and reproducibility.

4.3 Test specimens

Fire safety engineering requires data on commercial products or product components. In a reduced-scale test, the manner in which a specimen of the product is composed can affect the nature and yields of the combustion products. This is especially the case for products of non-uniform composition, such as those consisting of layered materials.

4.4 Combustion conditions

The yields of combustion products depend on such apparatus conditions as the fuel/air equivalence ratio, whether the decomposition is flaming or non-flaming, the persistence of flaming of the sample, the temperature of the specimen and the effluent produced, the thermal radiation incident on the specimen, the stability of the decomposition conditions and the interaction of the apparatus with the decomposition process, with the effluent and the flames.

The conditions of pyrolysis and combustion may differ locally and globally in a physical fire model, leading to difficulties in scale with real-fire conditions in reduced experiments.

The experimental conditions may be vitiation-controlled and/or ventilation-controlled, or may be unknown and vary during the test.

It is essential that the physical fire model enable accurate determinations of chemical effluent composition. Validation of the method according to ISO 12828-2 is a suitable way to validate the chemical analysis.

4.5 Effluent characterization

For the effluent from most common materials, the major acute toxic effects have been shown to depend upon a small number of major asphyxiant gases and a somewhat wider range of inorganic and organic irritants. In ISO 13571, a base set of combustion products has been identified for routine analysis. Novel materials may evolve previously unidentified toxic products. Thus, a more detailed chemical

© ISO 2021 – All rights reserved
Documents
Document Sharing Hub
Full document details: ISO TR 16312-2-2021

analysis may be needed in order to provide a full assessment of acute effects and to assess chronic or environmental toxicants.

A bioassay can provide guidance on the importance of toxicants not included in the base set. ISO 19706 contains a fuller discussion of the utility of integrating assays. It is desirable that the physical fire model accommodate a bioassay method. However, due to bioethics practices, such use and comparisons are limited. The use of laboratory animals as test subjects or living tissues are means of insuring inclusion of the impact of all combustion gases. However, it is recognized that the adoption and use of such protocols may be prohibited in some jurisdictions and tend to disappear. An animal-free protocol can capture the effects of known combustion gases, but can miss the impact of any unexpected or uncommon and highly toxic species, the smoke components of which are most in need of identification.

5 Significance and use

Most computational models of fire hazard and risk require information regarding the potential of fire effluent (gases, heat and smoke) to cause harm to people and to affect their ability to escape or to seek refuge.

The quality of the data on fire effluent has a profound effect on the accuracy of the prediction of the degree of life safety offered by an occupancy design. Uncertainty in such predictions commonly leads to the use of safety factors that can compromise functionality and increase cost.

Fire safety engineering requires data on commercial products. Real-scale tests of such products generally provide accurate fire effluent data. However, due to the large number of available products, the high cost of performing real-scale tests of products and the small number of large-scale test facilities, information on effluent toxicity is most often obtained from physical fire models.

There are numerous physical fire models cited in national regulations. These models vary in design and operation, as well as in their degree of characterization. The assessments of these models in this document provide product manufacturers, regulators and fire safety professionals with insight into appropriate and inappropriate sources of fire effluent data for their defined purposes.

The assessments of physical fire models in this document do not address means for combining the effluent component yields to estimate the effects on laboratory animals (see ISO 13344) or for extrapolating the test results to people (see ISO 13571).

The methods that do not include animal exposure and are not amenable to such an adaptation might not allow identification of extreme and/or unusual toxicity.

Note that four depreciated methods are detailed in Annex A.

6 Physical fire models

6.1 Smoke chambers - Closed cabinet toxicity tests (international)

6.1.1 NBS smoke chamber

6.1.1.1 Application

This physical fire model is described in ASTM E662, with a vertically-orientated sample and heat flux limited to 25 kW/m^2. It was first designed to generate smoke optical density data. The physical fire model has also been implemented by the European Union in EN 2824, EN 2825, and EN 2826 for determination of smoke density and gas components in smoke. It is also used in ABD-0031 (Airbus) and BSS 7239 (Boeing) for smoke in passenger aircraft.

© ISO 2021 – All rights reserved

Documents
Document Sharing Hub
Full document details: ISO TR 16312-2-2021

6.1.1.2 Principle

A vertically mounted specimen, 76 mm square and up to 25 mm thick, is exposed to a radiant heater for a minimum of 10 min. Tests are conducted at 25 kW/m^2 with and without pilot flame. The gases are sampled through probes positioned at various positions in the smoke box depending on the standard applied.

6.1.1.3 Fire stage(s)

The fire stage(s) according to ISO 19706 are not clearly defined and may change during the test.

6.1.1.4 Types of data

The standard procedure includes measurement of smoke obscuration and specific effluent gas concentrations (CO_2, CO, HCN, HCl, HF, HBr, NO_x, SO_2) with a large number of analytical techniques. Depending on the standard applied, gas data can be provided continuously during test or at the time when the maximum smoke concentration is reached. In the two aircraft tests, the specific optical density of the smoke and the gas concentrations are determined at 90 s and 240 s.

6.1.1.5 Presentation of results

The specific optical density of the smoke and the combustion fire gas concentrations are compared to specified values.

6.1.1.6 Apparatus assessment

6.1.1.6.1 Advantages

The apparatus is simple to use and widely available. The test specimen can be a reasonable representation of a finished product.

6.1.1.6.2 Disadvantages

The combustion conditions are not well characterized as they are linked to oxygen consumption inside the chamber. At the beginning of the test, they are well-ventilated if it is flaming but their evolution depends on sample behaviour. Vitiation can occur and affects the yields of combustion products.

The test specimen is vertical and melting materials can flow into the trough below the specimen holder or even onto the floor of the test chamber, thereby altering the combustion mode or even reducing the amount of specimen destroyed.

The gases are mixed by natural convection and possible stratification can lead to non-representative sampling of the combustion gases.

6.1.1.6.3 Repeatability and reproducibility

No data reported.

6.1.1.7 Toxicological results

6.1.1.7.1 Advantages

The initial conditions are few and well prescribed.

6.1.1.7.2 Disadvantages

Possible vitiation could lead to time dependent generation of toxicants, which are only sampled at a specified time in some applications of the standard.

© ISO 2021 – All rights reserved
Documents
Document Sharing Hub
Full document details: ISO TR 16312-2-2021

Condensation could occur on the wall of the chamber leading to removal of some gases from the sampled environment. The prescribed set of gases to be measured may be insufficient for estimating lethal toxic potency.

6.1.1.8 Miscellaneous

No animals are exposed in the test, nor is the apparatus compatible with such an addition. The use of the chemical data is typically limited to a comparison with critical concentrations of listed toxic gases.

6.1.1.9 Validation

No data reported.

6.1.1.10 Conclusion

While relatively easy to perform, this method is of questionable value for generating smoke toxicity data for use in fire hazard analysis. It is also necessary to verify its use as a screening tool against real-scale fire test data. The absence of animal-exposure data means that extreme or unusual toxic potency of smoke is not identified.

6.1.2 ISO smoke chamber

6.1.2.1 Application

This physical fire model is described in ISO 5659-2 and ASTM E 1995, with a horizontally-orientated sample and heat fluxes up to 50 kW/m^2. It was first designed to generate smoke optical density data. The International Maritime Organization (IMO) also requires use of this apparatus for toxic gas concentration data for qualification of materials. The physical fire model has also been implemented by the European Union in EN 45545-2 for determination of burning behaviour, smoke density and gas components in smoke on materials used for the railway sector.

ISO/TS 19021 has been developed to propose suitable specifications to operate this fire model with a FTIR gas analyser according to ISO 19702 (see Reference [33]).

6.1.2.2 Principle

A schematic of this closed cabinet test is shown in Figure 1. A horizontally mounted specimen, 75 mm^2 square and up to 25 mm thick, is exposed to a radiant heater for a minimum of 10 min. A test is conducted at 25 kW/m^2 and at 50 kW/m^2, with and without pilot flame. The gases are sampled through probes positioned at various positions of the smoke box depending on the standard applied. ISO/TS 19021 proposes a small multi-hole probe close to the ceiling of the chamber.

6.1.2.3 Fire stage(s)

The fire stage(s) according to ISO 19706 are not clearly defined and may change during the test.

6.1.2.4 Types of data

The standard procedure includes measurement of total mass loss, smoke obscuration and specific effluent gas concentrations (CO_2, CO, HCN, HCl, HF, HBr, NO_x, SO_2). ISO/TS 19021 uses measurement of concentrations with FTIR following ISO 19702. Depending on the standard applied, gas data could be provided continuously during the test or at the time when the maximum smoke concentration is reached.

6.1.2.5 Presentation of results

The specific optical density of the smoke and the combustion fire gas concentrations are compared to specified values.

© ISO 2021 – All rights reserved

Documents
Document Sharing Hub
Full document details: ISO TR 16312-2-2021

6.1.2.6 Apparatus assessment

6.1.2.6.1 Advantages

The apparatus is simple to use and widely available. The test specimen can be a reasonable representation of a finished product.

6.1.2.6.2 Disadvantages

The combustion conditions are not well characterized as they are linked to oxygen consumption inside the chamber. At the beginning of the test, they are well-ventilated if it is flaming but their evolution depends on sample behaviour. Vitiation can occur and affects the yields of combustion products.

The gases are mixed by natural convection and possible stratification can lead to non-representative sampling of the combustion gases.

6.1.2.6.3 Repeatability and reproducibility

Inter-laboratory evaluations have been performed for the smoke density test and gave satisfactory results for a range of materials. Inter-laboratory evaluation of toxic gas production has been reported in ISO/TS 19021.

6.1.2.7 Toxicological results

6.1.2.7.1 Advantages

The initial conditions are few and well prescribed.

6.1.2.7.2 Disadvantages

Possible vitiation could lead to time dependent generation of toxicants, which are only sampled at a specified time in some applications of the standard. ISO/TS 19021 proposes a continuous monitoring, but this sampling has to be reduced in order to avoid modifying the behaviour of the material tested.

Condensation could occur on the wall of the chamber leading to removal of some gases from the sampled environment. The prescribed set of gases to be measured may be insufficient for estimating lethal toxic potency.

6.1.2.8 Miscellaneous

No animals are exposed in the test, nor is the apparatus compatible with such an addition. The use of the chemical data is typically limited to a comparison with critical concentrations of listed toxic gases.

6.1.2.9 Validation

There are several reported comparisons of toxic gas generation with data from real-scale fire tests in ISO/TS 19021. They highlight the difficulty in relating this fire scenario to any real-scale application.

6.1.2.10 Conclusion

While relatively easy to perform, this method is of questionable value for generating smoke toxicity data for use in fire hazard analysis. It is also necessary to verify its use as a screening tool against real-scale fire test data. The absence of animal-exposure data means that extreme or unusual toxic potency of smoke is not identified.

© ISO 2021 – All rights reserved
Documents
Document Sharing Hub
Full document details: ISO TR 16312-2-2021

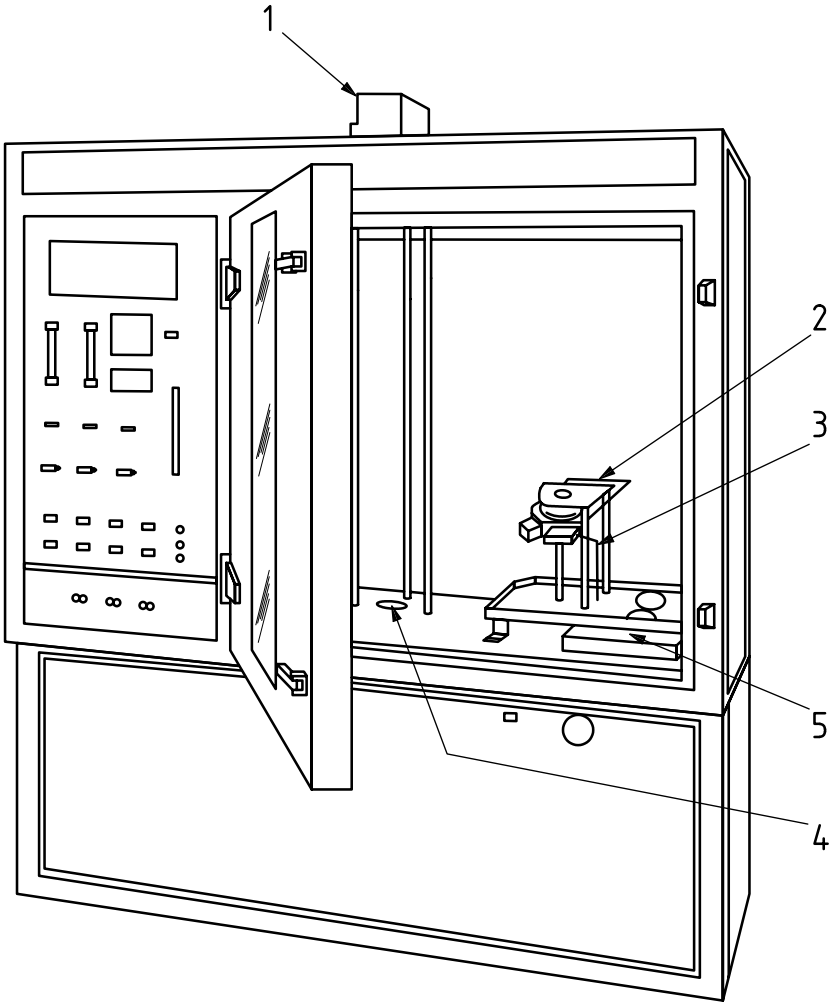

Key

1 photomultiplier-tube housing
2 radiator cone
3 pilot burner
4 light source window
5 blow-out panel

Figure 1 — Schematic of the closed cabinet toxicity test apparatus

6.2 NES 713 (United Kingdom)

6.2.1 Application

This apparatus was designed to provide values of a toxicity index for use in short-listing materials and end products for warship marine use[8]. It is also known as UK Ministry of Defence Standard DEFSTAN 02-713.

6.2.2 Principle

A photograph of this closed cabinet test is shown in Figure 2. A specimen of size chosen to provide optimal analytical precision (typically a few grams) is exposed to a premixed Bunsen burner flame. The burner is turned off after the specimen has burned to completion, and the atmosphere is mixed with a fan before being sampled for gas measurement.

© ISO 2021 – All rights reserved

Documents
Document Sharing Hub
Full document details: ISO TR 16312-2-2021

6.2.3 Fire stage(s)

The fire stage from ISO 19706 is as follows:

— 2, well-ventilated flaming.

However, this might not relate to a real fire, as the burner is actually a premixed blow-torch-type flame at about 850 °C and not a free-burning fire.

6.2.4 Types of data

The standard procedure includes measurement of CO, CO_2, formaldehyde, NO_x, HCN, acrylonitrile, phosgene, SO_2, H_2S, HCI, NH_3, HF, HBr and phenol. Corrections are applied for the concentrations of CO, CO_2 and NO_x produced by the gas flame alone burning for the same period as the test specimen.

6.2.5 Presentation of results

The output is an FED-like toxicity index for the 14 gases. The weightings of the gases are the concentrations considered nominally lethal to a man for a 30 min exposure. The index is calculated for 1 g of sample or for 1 m of wire or cable.

6.2.6 Apparatus assessment

6.2.6.1 Advantages

The apparatus is simple to use. The combustion period is short, so the combustion environment is stable throughout. The test specimen can be a reasonable representation of a finished product.

6.2.6.2 Disadvantages

Nearly all materials and end products are composed of multiple components. These can gasify at different times during burning. The test specimen is immersed in a pre-mixed gas flame and is burned to completion, but this might not produce gases representative of the combustion of the sample in real fire conditions. The test specimen is small and is immersed in the test flame and combusted from all sides and to completion. In common with many physical fire models, no indication is given about the rate of burning, so highly fire-retarded materials can be forced to burn at the same rate as materials without any fire retardants. Therefore, additional data input on burning rates at different fire stages are needed for fire safety engineering calculations. Colorimetric tubes are not a reliable measurement technique for combustion products due to possible interferences.

6.2.6.3 Repeatability and reproducibility

There are no reported results of an inter-laboratory evaluation. However, repeatability is reported to be reasonably good, since the specimen is relatively small, is completely immersed in the gas flame and is burned to completion.

6.2.7 Toxicological results

6.2.7.1 Advantages

The initial conditions are few and well prescribed.

6.2.7.2 Disadvantages

The gases selected are those considered by the originators of the standard to be a hazard in warship fires. The levels specified were considered to be relevant when the standard was reviewed in 2000. The coefficients for the toxicity index calculation are not current. The basis for the index equation is unclear.

© ISO 2021 – All rights reserved
Documents
Document Sharing Hub
Full document details: ISO TR 16312-2-2021

6.2.8 Miscellaneous

No animals are exposed in the test, nor is the apparatus compatible with such an addition.

6.2.9 Validation

There are no reported comparisons of toxic gas generation with data from real-scale fire tests.

6.2.10 Conclusion

While relatively easy to perform, this method is of questionable value for generating smoke toxicity data for use in fire hazard analysis because of its unsatisfactory fire model and its weak analytical method. Its use as a screening tool has not been verified against real-scale fire test data as it is intended that short-listed materials would be retested with more relevant tests. The small sample size limits the use for evaluation of finished products. The absence of animal-exposure data means that extreme or unusual toxic potency of smoke will not be identified.

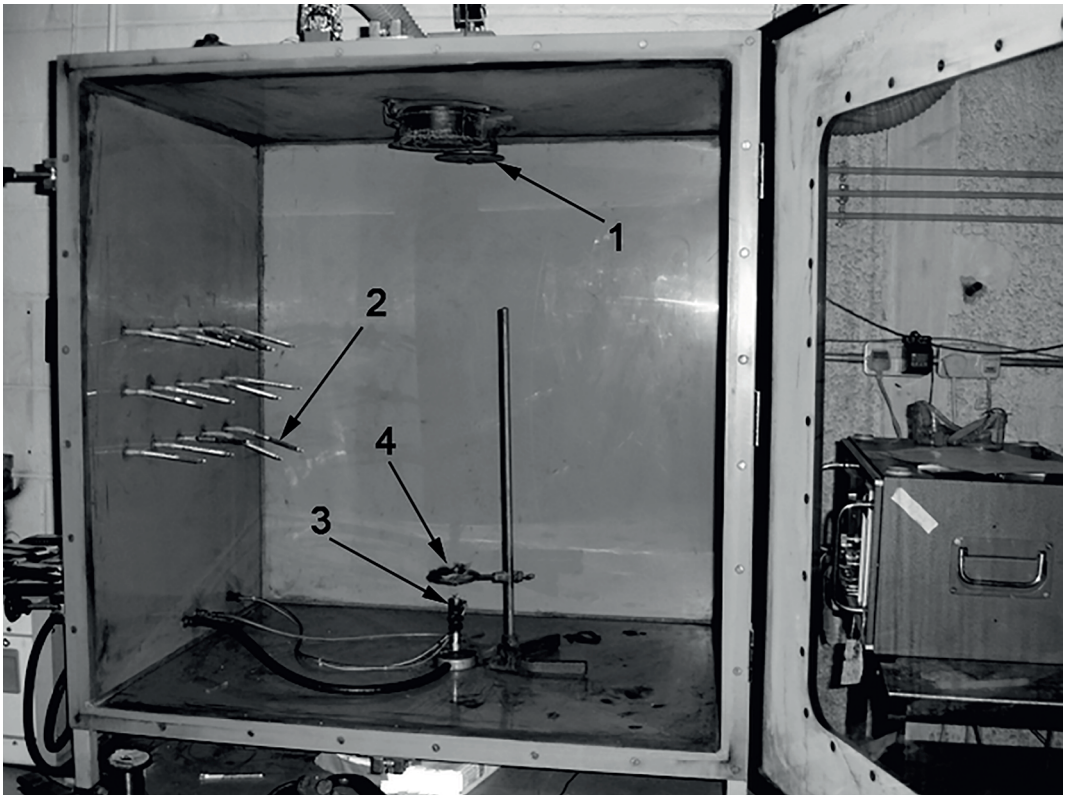

Key

1 mixing fan
2 gas-sampling tube
3 gas burner
4 specimen support

Figure 2 — Photograph of the NES 713 apparatus

© ISO 2021 – All rights reserved

Documents
Document Sharing Hub
Full document details: ISO TR 16312-2-2021

6.3 Rotative cages smoke toxicity tests

6.3.1 Japanese and Korean methods

6.3.1.1 Application

This model was designed to obtain toxic potency data for building and furnishing materials[9],[10]. It is the basis for the method prescribed in the fireproof performance test and evaluation procedure which is used by performance evaluation bodies designated by the Ministry of Land, Infrastructure and Transport of Japan, and also used in the Republic of Korea as KSF2271.

6.3.1.2 Principle

This is a two-chamber apparatus (see Figure 3). The sample is placed in a gas furnace and effluents are released to the first chamber. There is a slow flow of air through the combustion chamber in order to keep the oxygen in the mouse-exposure chamber above 16 %. The samples, 220 mm square and not more than 15 mm thick, are exposed in moderately vitiated air to convective and radiative heating. The exhaust gas is introduced into an animal-exposure chamber in which there are 8 rotary cages, each containing a mouse. The movement of the mice is monitored and reflected to the evaluation of toxicity.

The criteria are based on time to incapacitation, normally expressed as relative to that obtained with a "Red Lauan" wood reference, giving a time to incapacitation of 6,8 min in Japan. Korea uses a criterion of 9 min.

6.3.1.3 Fire stage(s)

The fire stage from ISO 19706 is as follows:

— 3.a, small, localized fire, generally in a poorly ventilated compartment.

6.3.1.4 Types of data

The standard procedure is to measure the times to incapacitation of the mice. In addition, gas samples can be extracted for external analysis. Following the test, blood samples can be extracted for analysis.

6.3.1.5 Presentation of results

The reported information is the incapacitation times of the eight mice. Usually, 15 min is the maximum amount of time.

6.3.1.6 Apparatus assessment

6.3.1.6.1 Advantages

The single combustion test condition is well defined. The method could be adapted to produce data enabling calculation of yields of toxicants.

6.3.1.6.2 Disadvantages

The test is limited to a single fire stage.

6.3.1.6.3 Repeatability and reproducibility

In a 4-laboratory examination of the method for six materials[9], the interlaboratory standard deviation of the times to incapacitation of the mice was under 15 %. The agreement of duplicate tests within each laboratory was within 5 %.

© ISO 2021 – All rights reserved
Documents
Document Sharing Hub
Full document details: ISO TR 16312-2-2021