TECHNICAL REPORT

ISO/TR 24578

First edition
2012-05-15

Hydrometry — Acoustic Doppler profiler — Method and application for measurement of flow in open channels

Hydrométrie — Profils Doppler acoustiques — Méthode et application pour le mesurage du débit en conduites ouvertes

Reference number
ISO/TR 24578:2012(E)

Documents
Document Sharing Hub
© ISO 2012

Full document details: ISO_TR 24578_2012

COPYRIGHT PROTECTED DOCUMENT

© ISO 2012

All rights reserved. Unless otherwise specified, no part of this publication may be reproduced or utilized in any form or by any means, electronic or mechanical, including photocopying and microfilm, without permission in writing from either ISO at the address below or ISO's member body in the country of the requester.

ISO copyright office
Case postale 56 • CH-1211 Geneva 20
Tel. + 41 22 749 01 11
Fax + 41 22 749 09 47
E-mail copyright@iso.org
Web www.iso.org

Published in Switzerland

© ISO 2012 – All rights reserved

Documents
Document Sharing Hub

Full document details: ISO_TR 24578_2012

Contents

Page

Foreword ... iv

1 Scope ... 1

2 Normative references ... 1

3 Terms and definitions ... 1

4 Principles of operation ... 3
4.1 General ... 3
4.2 Doppler principle applied to moving objects ... 4
4.3 Acoustic Doppler operating techniques ... 6
4.4 Movement monitoring techniques ... 12

5 Principles of methods of measurement ... 13
5.1 Data retrieval modes ... 13
5.2 Maintenance ... 13
5.3 Training ... 13
5.4 Flow determination using a vertically mounted ADCP ... 13
5.5 Discharge measurement process ... 16
5.6 Section-by-section method ... 26
5.7 Ancillary equipment ... 26

6 Site selection for the use of vertically mounted ADCPs ... 27
6.1 General ... 27
6.2 Additional site-selection criteria ... 27

7 Computation of measurement ... 28
7.1 Vertically mounted ADCPs ... 28
7.2 Measurement review ... 29

8 Uncertainty ... 30
8.1 General ... 30
8.2 Definition of uncertainty ... 30
8.3 Uncertainties in ADCP measurements ...
General considerations ... 31
8.4 Sources of uncertainty ... 31
8.5 Minimizing uncertainties ... 32

Annex A (informative) **Velocity distribution theory and the extrapolation of velocity profiles** ... 33

Annex B (informative) **Determination of discharge between banks and the area of measured discharge** ... 35

Annex C (informative) **Example of an equipment check list** ... 38

Annex D (informative) **Example of ADCP gauging field sheets** ... 39

Annex E (informative) **Beam alignment test** ... 42

Bibliography ... 44

© ISO 2012 – All rights reserved

Documents
Document Sharing Hub

Full document details: ISO_TR 24578_2012

Foreword

ISO (the International Organization for Standardization) is a worldwide federation of national standards bodies (ISO member bodies). The work of preparing International Standards is normally carried out through ISO technical committees. Each member body interested in a subject for which a technical committee has been established has the right to be represented on that committee. International organizations, governmental and non-governmental, in liaison with ISO, also take part in the work. ISO collaborates closely with the International Electrotechnical Commission (IEC) on all matters of electrotechnical standardization.

International Standards are drafted in accordance with the rules given in the ISO/IEC Directives, Part 2.

The main task of technical committees is to prepare International Standards. Draft International Standards adopted by the technical committees are circulated to the member bodies for voting. Publication as an International Standard requires approval by at least 75 % of the member bodies casting a vote.

In exceptional circumstances, when a technical committee has collected data of a different kind from that which is normally published as an International Standard ("state of the art", for example), it may decide by a simple majority vote of its participating members to publish a Technical Report. A Technical Report is entirely informative in nature and does not have to be reviewed until the data it provides are considered to be no longer valid or useful.

Attention is drawn to the possibility that some of the elements of this document may be the subject of patent rights. ISO shall not be held responsible for identifying any or all such patent rights.

ISO/TR 24578 was prepared by Technical Committee ISO/TC 113, *Hydrometry*, Subcommittee SC 1, *Velocity area methods*.

© ISO 2012 – All rights reserved
Documents
Document Sharing Hub
Full document details: ISO_TR 24578_2012

Hydrometry — Acoustic Doppler profiler — Method and application for measurement of flow in open channels

1 Scope

This Technical Report deals with the use of boat-mounted acoustic Doppler current profilers (ADCPs) for determining flow in open channels without ice cover. It describes a number of methods of deploying ADCPs to determine flow. Although, in some cases, these measurements are intended to determine the stage-discharge relationship of a gauging station, this Technical Report deals only with single determination of discharge.

The term ADCP has been adopted as a generic term for a technology that is manufactured by various companies worldwide. They are also called acoustic Doppler velocity profilers (ADVPs) or acoustic Doppler profilers (ADPs). ADCPs can be used to measure a variety of parameters, such as current or stream flow, water velocity fields, channel bathymetry and estimation of sediment concentration from acoustic backscatter. This Technical Report is generic in form and contains no operational details specific to particular ADCP makes and models. Accordingly, to use this document effectively, it is essential that users are familiar with the terminology and functions of their own ADCP equipment.

2 Normative references

The following referenced documents are indispensable for the application of this document. For dated references, only the edition cited applies. For undated references, the latest edition of the referenced document (including any amendments) applies.

ISO 772, *Hydrometry — Vocabulary and symbols*

3 Terms and definitions

For the purpose of this document, the terms and definitions given in ISO 772 and the following apply

3.1
ADCP depth
transducer depth
depth of the ADCP transducers below the water surface during deployment measured from the centre point of the transducer to the water surface

NOTE The ADCP depth may be measured either manually or by using an automatic pressure transducer.

3.2
bin
depth cell
truncated cone-shaped volume of water at a known distance and orientation from the transducers

NOTE The ADCP determines an estimated velocity for each cell using a weighted averaging scheme, which takes account of the water not only in the bin itself but also in the two adjacent bins.

3.3
blank
blanking distance
distance travelled by the signal when the vibration of the transducer during transmission prevents the transducer from receiving echoes or return signals

NOTE 1 This is the distance immediately below the ACDP transducers in which no measurement is taken.

© ISO 2012 – All rights reserved

Documents
Document Sharing Hub
Full document details: ISO_TR 24578_2012

NOTE 2 The distance should be the minimum possible. However, care must be taken not to make the distance too short in order to avoid contamination by ringing or bias by flow disturbance.

3.4
bottom tracking
method whereby the velocity of the bottom is measured together with the water velocity, allowing the system to correct for the movement of the vessel

NOTE This acoustic method is used to measure boat speed and direction by computing the Doppler shift of sound reflected from the stream bed relative to the ADCP.

3.5
data retrieval modes
real-time mode in which the ADCP can retrieve data

NOTE A self-contained mode can be used but is not normally recommended.

3.6
deploy
ADCP initialized to collect data and propel the instrument across the section to record data

NOTE A deployment typically includes several (pairs) of transects or traverses across a river or estuary.

3.7
deployment method
operating mode
technique to propel the ADCP across a watercourse

NOTE Three different deployment methods are used: a manned boat; a tethered boat; or a remote-controlled boat.

3.8
ensemble
profile
collection of pings

NOTE 1 A column of bins equivalent to a vertical (in conventional current meter gauging).

NOTE 2 An ensemble or profile may refer to a single measurement of the water column or an average of pings or profile measurements.

3.9
ping
series of acoustic pulses, of a given frequency, transmitted by an acoustic Doppler current profiler

NOTE Sound pulses transmitted by the ADCP for a single measurement.

3.10
profiling mode
ADCP settings for type pattern of sound pulses

NOTE 1 Some types of equipment allow settings to be selected by the user.

NOTE 2 Different modes are suitable for different flow regimes, e.g. fast or slow, deep or shallow.

3.11
real-time mode
data retrieval mode in which the ADCP relays information to the operating computer as it gathers it.

NOTE The ADCP and computer are connected (physically or wireless) throughout the deployment.

© ISO 2012 – All rights reserved
Documents
Document Sharing Hub
Full document details: ISO_TR 24578_2012

3.12
self-contained mode
autonomous mode
data retrieval mode in which the ADCP stores the information it gathers within its own memory and then downloaded to a computer after deployment.

NOTE This method is generally not used by majority of ADCP practitioners nor recommended by the majority of hydrometric practitioners.

3.13
transect
pass
one sweep across the watercourse during an ADCP deployment

NOTE 1 In the self-contained mode, a deployment can consist of any number of transects.

NOTE 2 In the real-time mode, a deployment consists of one transect.

4 Principles of operation

4.1 General

The Acoustic Doppler Current Profiler (ADCP) is a device for measuring current velocity and direction, throughout the water column, in an efficient and non-intrusive manner. It can produce an instantaneous velocity profile down through the water column while disturbing only the top few decimetres. ADCPs nominally work using the Doppler principle (see 4.2). An ADCP is usually a cylinder with a transducer head on the end (see Figure 1). The transducer head is a ring of three or four acoustic transducers with their faces angled to the horizontal and at specified angles to each other.

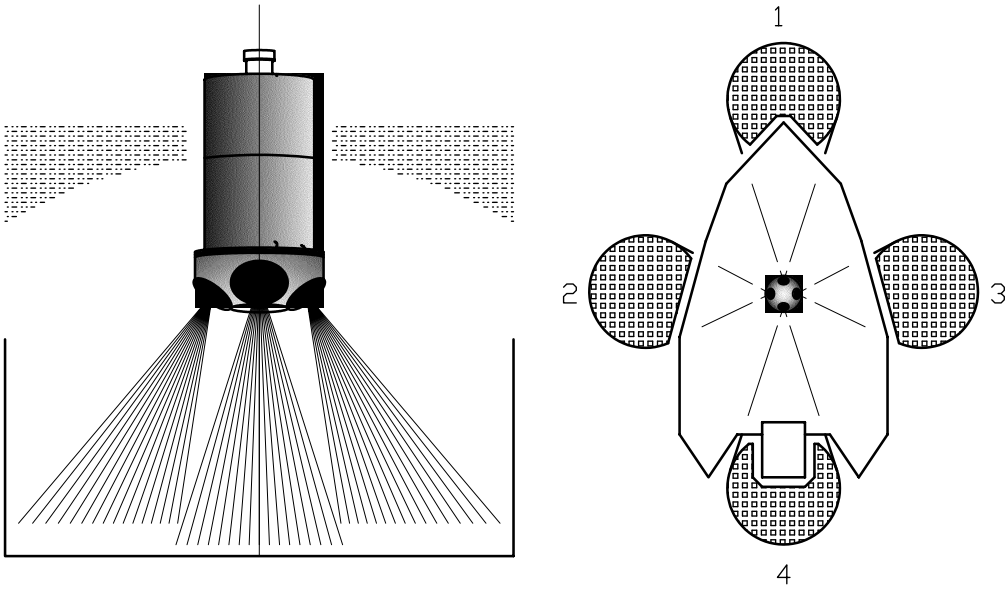

Key
1 forward
2 port
3 starboard
4 aft

Figure 1 — Sketch illustrating typical ADCP with four sensors

© ISO 2012 – All rights reserved

Documents
Document Sharing Hub
Full document details: ISO_TR 24578_2012

The instrument was originally developed for use in the study of ocean currents – tracking them and producing velocity profiles – and other oceanographic work. It has since been developed for use in estuaries and rivers. An ADCP can be mounted on a boat or a flotation collar or raft and propelled across a river (see Figure 2). The route taken does not need to be straight or perpendicular to the bank. The instrument collects measurements of velocity, depth and position as it goes. The ADCP can also be used to take measurements in fixed positions across the measurement cross section. These fixed positions are similar to verticals in conventional current meter gauging (see ISO 748). This is referred to as the "section-by-section method" (see 5.6).

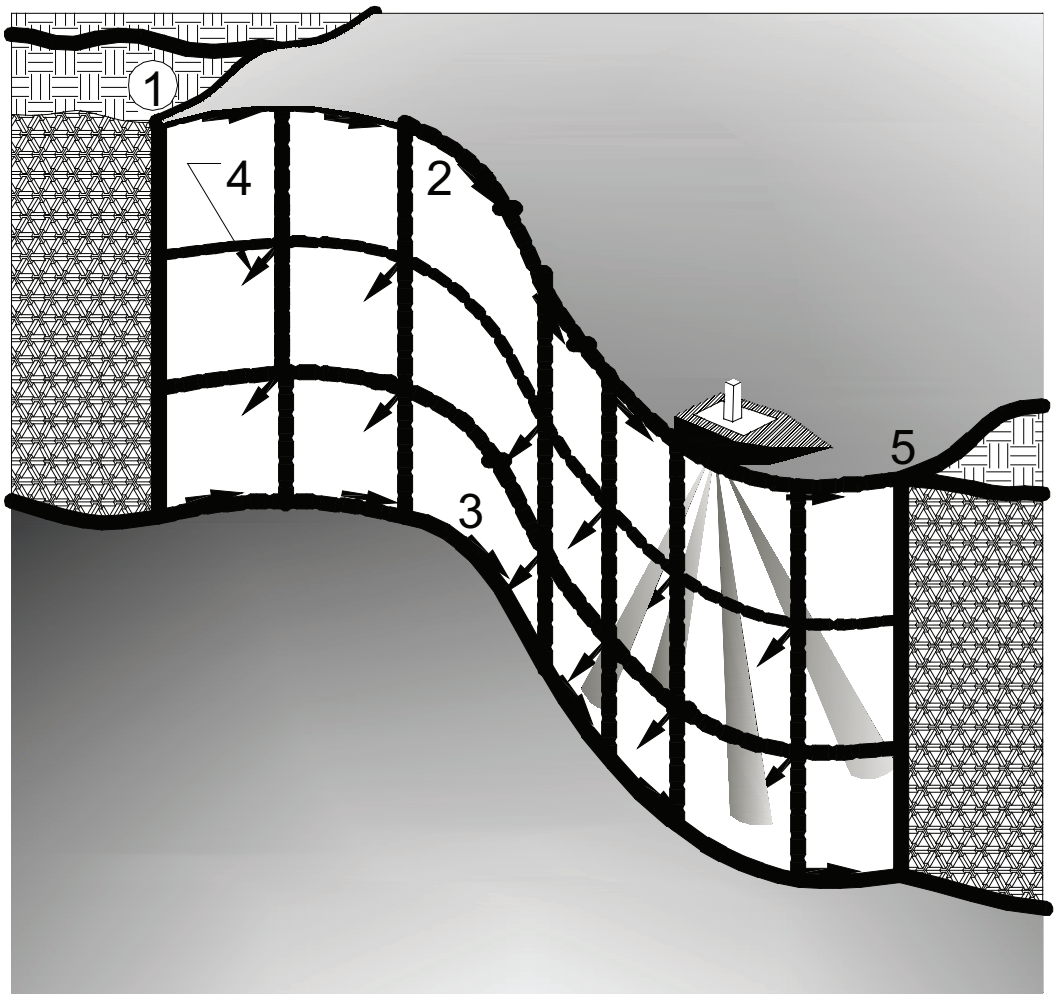

Key

1 start
2 path of boat
3 path of boat on river bottom
4 flow velocity vectors
5 finish

Figure 2 — Sketch illustrating moving-boat ADCP deployment principles

4.2 Doppler principle applied to moving objects

The ADCP uses ultrasound to measure water velocity using a principle of physics discovered by Christian Doppler. The reflection of sound-waves from a moving particle causes an apparent change in frequency to the reflected sound wave. The difference in frequency between the transmitted and reflected sound wave is known as the Doppler shift.

© ISO 2012 – All rights reserved
Documents
Document Sharing Hub
Full document details: ISO_TR 24578_2012

It should be noted that only components of velocity parallel to the direction of the sound wave produce a Doppler shift. Thus, particles moving at right angles to the direction of the sound waves (i.e. with no velocity components in the direction of the sound wave) will not produce a Doppler shift.

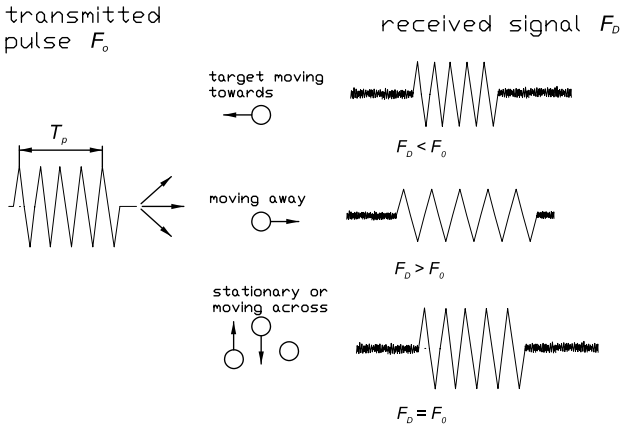

Figure 3 — Reflection of sound-waves by a moving particle results in an apparent change in the frequency of those sound waves

Doppler's principle relates the change in frequency to the relative velocities of the source (reflector) and the observer. In the case of most ADCPs, the transmitted sound is reflected off particulates or air bubbles in the water column and reflected back to the transducer. It is assumed that the particulates move at the same velocity as the water and from this the frequency shift can be translated to a velocity magnitude and direction. It should be noted, however, that excessive air bubbles can cause distortion in, or loss of, the returned signal. Furthermore, air bubbles naturally rise and therefore are likely not to be travelling in a representative magnitude and direction.

4.2.1 Speed of sound in water

The calculated velocity is directly related to the speed of sound in the water. The speed of sound varies significantly with changes in pressure, water temperature, salinity and sediment concentration, but is most sensitive to changes water temperature. Most manufacturers of ADCP systems measure water temperature near the transducer faces and apply correction factors to allow for temperature related differences in the speed of sound. ADCPs that do not have temperature compensation facilities should be avoided.

If the instrument is to be used in waters of varying salinity, the software used to collect data should have the facility to correct for salinity.

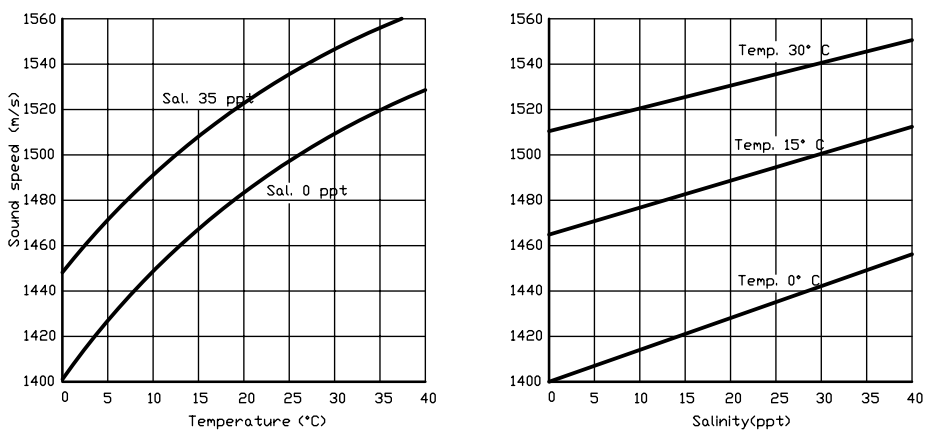

Figure 4 — Sound speed as a function of temperature at different salinity levels (left panel) and salinity at different temperature levels (right panel)

© ISO 2012 – All rights reserved

Documents
Document Sharing Hub
Full document details: ISO_TR 24578_2012

Figure 4 indicates the effect of temperature and salinity on the speed of sound. As a general rule,

— a temperature change of 5 °C results in a sound speed change of 1 %,

— a salinity change of 12 ppt (parts per thousand) results in a change in sound speed of 1 %; freshwater is 0 ppt and seawater is in the region of 30 to 35 ppt), and

— the full range of typical temperature and salinity levels (–2 to 40 °C and 0 to 40 ppt) gives a sound speed range of 1 400 to 1 570 m/s (total change of 11 %).

4.3 Acoustic Doppler operating techniques

4.3.1 General

All ADCPs fit into one of three general categories, based upon the method by which the Doppler measurements are made:

— pulse incoherent (including narrowband);

— pulse-to-pulse coherent;

— spread spectrum or broadband.

Reference should be made to the instrument manual to determine the type of instrument being used.

4.3.2 Pulse incoherent

An incoherent Doppler transmits a single, relatively long, pulse of sound and measures the Doppler shift, which is used to calculate the velocity of the particles along the path of the acoustic beam. The velocity measurements made using incoherent processing are very robust over a large velocity range, although they have a relatively high short-term (single ping) uncertainty. To reduce the uncertainty, multiple pulses are transmitted over a short time period (typically 9 to 20 per second), these are then averaged before reporting a velocity. “Narrowband” is used in the industry to describe a pulse-to-pulse incoherent ADCP. In a narrowband ADCP, only one pulse is transmitted into the water per beam per measurement (ping), and the resolution of the Doppler shift must take place during the duration of the received pulse. The narrowband acoustic pulse is a simple monochromatic wave and can be processed quickly.

4.3.3 Pulse-to-pulse coherent

Coherent Doppler systems are the most accurate of the three, although they have significant range limitations. Coherent systems transmit one, relatively short, pulse, record the return signal, then transmit a second short pulse when the return from the first pulse is no longer detectable. The instrument measures the phase difference between the two returns and uses this to calculate the Doppler shift. Velocity measurements made using coherent processing are very precise (low short-term uncertainties), but they have significant limitations. Coherent processing will work only in limited depth ranges and with a significantly limited maximum velocity. If these limitations are exceeded, velocity data from a coherent Doppler system are effectively meaningless.

4.3.4 Spread spectrum (broadband)

Like coherent systems, broadband Dopplers transmit two pulses and look at the phase change of the return from successive pulses. However, with broadband systems, both acoustic pulses are within the profiling range at the same time. The broadband acoustic pulse is complex; it has a code superimposed on the waveform. The code is imposed on the wave form by reversing the phase and creating a pseudo-random code within the wave form. This pseudo-random code allows a number of independent samples to be collected from a single ping. Due to the complexity of the pulse, the processing is slower than in a narrowband system; however, multiple independent samples are obtained from each ping.

The short-term uncertainty of velocity measurements using broadband processing is between that of incoherent and coherent systems. Broadband systems are capable of measuring over a wider velocity range than coherent

© ISO 2012 – All rights reserved
Documents
Document Sharing Hub
Full document details: ISO_TR 24578_2012

systems; although, if this range is exceeded, the velocity data will be rendered meaningless. The accuracy and maximum velocity range of a broadband system is a function of the precise processing configuration used.

Although it can provide highly accurate velocity data in certain situations, coherent processing is not a practical tool for most current profiling applications. Incoherent and broadband processing are the primary processing techniques used in ADCPs in field applications.

4.3.5 Operational considerations

Following the blanking distance, ADCPs subdivide the water column being sampled by each beam into depth cells ranging from 0,01 m to 1 m or greater (Figure 5). A centre-weighted radial velocity is measured for each depth cell in each beam. With these results and using trigonometric relations, a 3-dimensional water velocity is computed and assigned to a given depth cell in the water column. Although this is analogous to a velocity profile obtained from a point velocity meter, the entire measurable region of the water column is sampled by the ADCP.

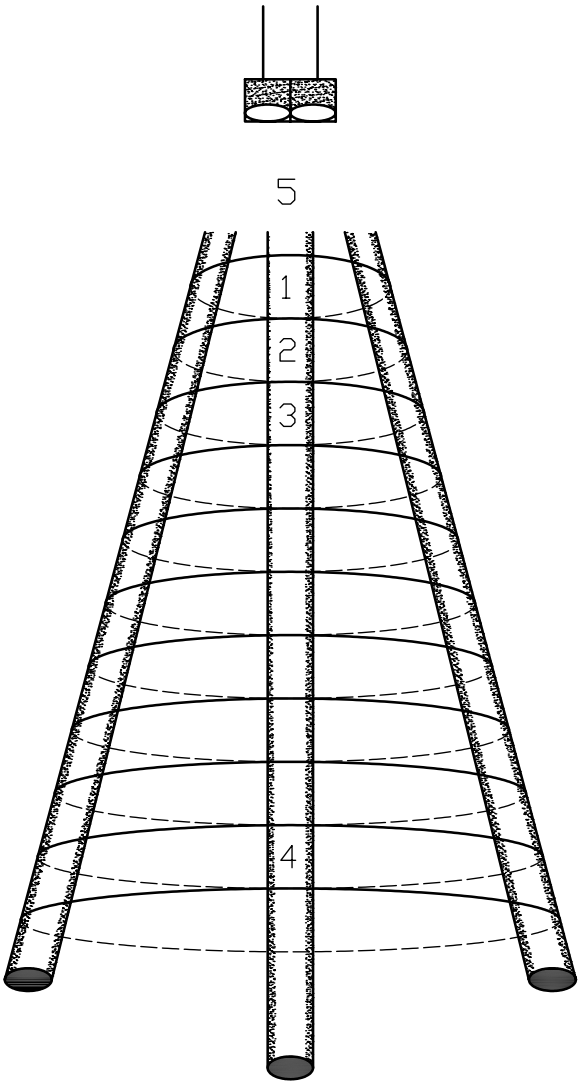

Key

1 cell/ bin 1
2 cell/ bin 2
3 cell/ bin 3
4 cell/ bin n
5 blanking distance

Figure 5 — ADCP depth cells or bins

© ISO 2012 – All rights reserved

Documents
Document Sharing Hub
Full document details: ISO_TR 24578_2012

The bin/cell size and the blanking distance should be set to minimize measurement uncertainty. This is dependant on water depth, velocity and time of measurement .The bin size and lag should be optimized accordingly. Long lags improve measurements and large bins increase the signal-to-noise ratio of the scatters in the pulse. This also reduces uncertainty (see Clause 8). The disadvantage of larger bins is that they may limit profiling in shallow depths. Small bins with a long lag lead to a decreased signal-to-noise ratio, increasing uncertainty.

Generally, the larger the sum of bin size and duration of individual measurement, the lower is the uncertainty of the velocity measurement within each bin. The greater the number of bins in the water column, the lower the uncertainty in the overall velocity estimate for that ensemble. A smaller bin size reduces the unmeasured area in the water column (see Figure 8).

Shallower streams or rivers require smaller depth cells. A minimum of two measured bins is recommended at the edges. However, for the majority of the cross section, a minimum of three cells are required in each ensemble in order to allow extension of the velocity profile into the unmeasured sections of the water column.

The range-gating technique used by ADCPs creates centre-weighted averages for each depth cell with an overlap between bins (see Figure 6). A pulse pair (with an overlap length equal to a bin size) is emitted by the ADCP transducer. As the pulse pair propagates down through the water column, reflected signals are received from successive depth cells. The loudest signal is received from reflections occurring when the full (overlap) length of the pulse pair is within the depth cell. Thus, a weight of 1 is achieved at the centre of the cell and tapers to a zero weight one bin size from the centre. The neighbouring bins would overlap such that each portion of the water would achieve a weight of 1.

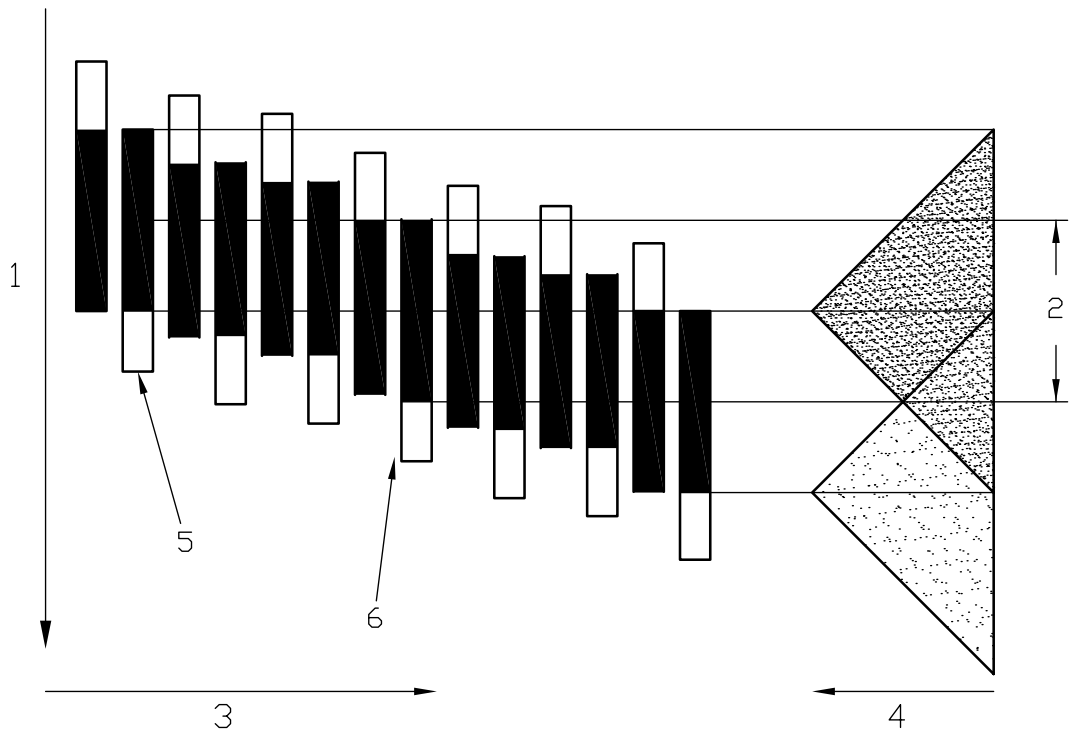

Key

1 depth
2 depth cell
3 time after ping
4 velocity weighting
5 pulse pair
6 loudest signal

Figure 6 — Showing the effect of range-gating and bin size on velocity averaging as a pulse pair propagates down through the water column

© ISO 2012 – All rights reserved
Documents
Document Sharing Hub
Full document details: ISO_TR 24578_2012

4.3.6 Near boundary data collection

The angle of the ADCP transducers varies depending on the manufacturer and the instrument. They typically range between 20 and 30 degrees from the vertical. The ADCP cannot measure all the way to the streambed. When acoustic transducers produce sound, most of the energy is transmitted in the main beam. However, there are also side lobes that contain less energy that propagate from the transducer as well. These side lobes do not pose a problem in most of the water column because they are of low energy. However, when the side lobe strikes the streambed, the streambed being a good reflector of this acoustic energy, much of the energy is reflected back to the transducer. Due to the slant of the beams, the acoustic energy in the main beam reflects off scatters in the water column near the bed at the same time that a vertical side lobe reflects from the streambed. The energy in the main beam reflected from these scatters in the water column is relatively low compared to the energy sent out from the transducer and the energy in the side lobe returned from the streambed is sufficient to contaminate the energy from the main beam near the bed. Therefore, there is an area near the bottom that cannot be measured due to side-lobe interference. This distance is computed as:

$$[1-\cos(\text{system angle})] \times 100 \qquad (1)$$

Thus, for a 20 degree system, it is 6 % of the range from the transducer. As the profile approaches the boundary, interference occurs due to reflection of side-lobe energy taking a direct (shorter) path to the boundary (see Figure 7).

© ISO 2012 – All rights reserved

Documents
Document Sharing Hub
Full document details: ISO_TR 24578_2012

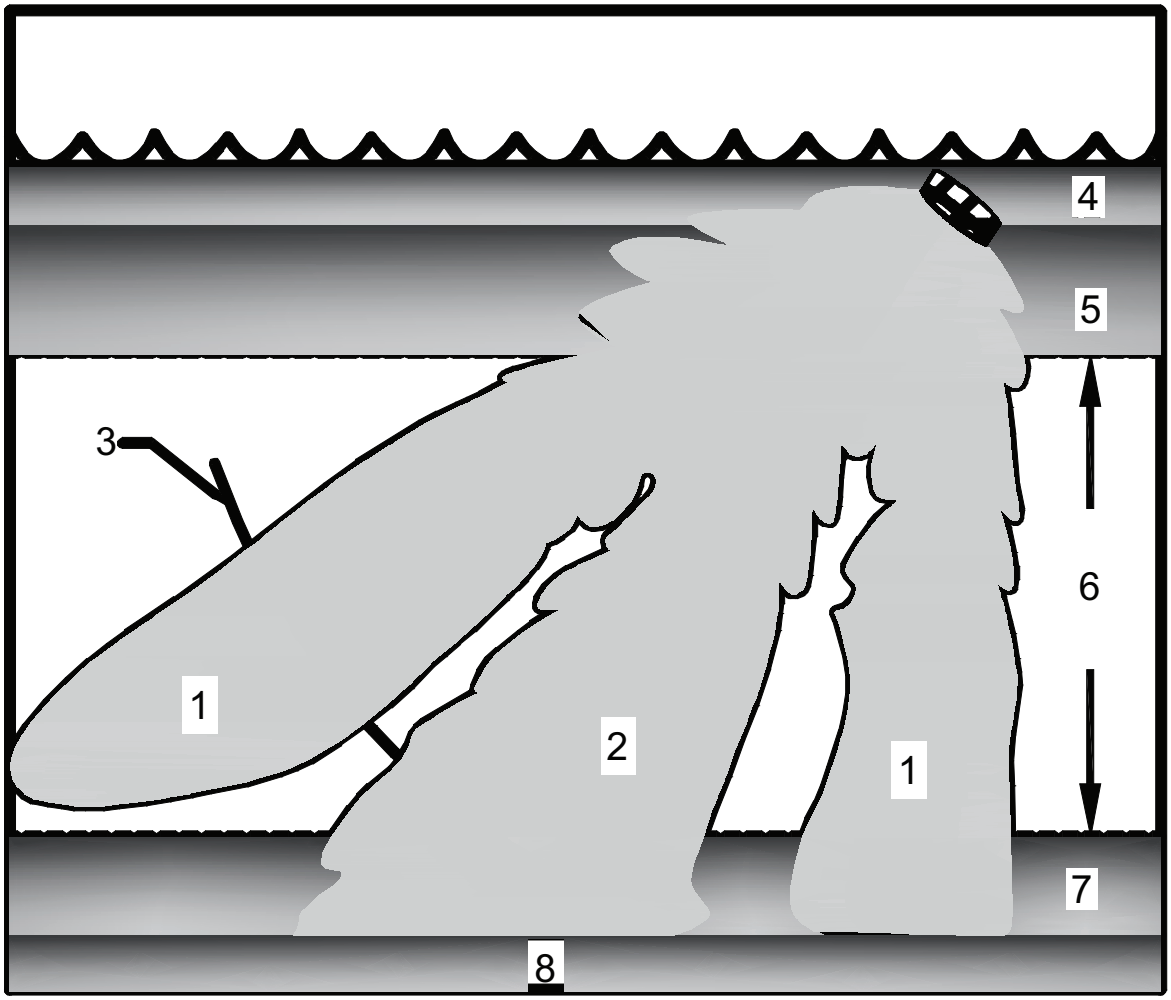

Key

1 side lobe
2 main beam
3 maximum slant range
4 draft
5 blanking distance
6 area of measured discharge
7 side-lobe interference
8 stream bed

Figure 7 — Diagram illustrating depth zones within the water column: blanking distance, area of measured discharge and zone subject to side-lobe interference

To ensure that there is no bias in the velocity estimate, the ADCP and its software should ignore that portion of the water column affected by side-lobe contamination near the bed. This is undertaken automatically by the instruments in current use. The user manual should provide information on this.

To avoid velocity bias, the mean velocity at depth should only be accepted if all beams are able to measure to the same water depth. Data from shorter path lengths (maybe due to boulders or other channel undulations) should not be used.

As illustrated in Figure 8, the instrument is unable to make velocity measurements in three areas:

— near the surface (due to the depth at which the instrument is located in the water and, added to this, the instrument blanking distance);

© ISO 2012 – All rights reserved
Documents
Document Sharing Hub
Full document details: ISO_TR 24578_2012

— near the bed (due to sidelobe interference, channel undulations and acoustic reflections caused at the bed);

— near the channel edges(due to a lack of sufficient water depth or to acoustic interference from signals returned from the bank).

The first two can be estimated by the ADCP using an appropriate velocity distribution extrapolation method such as the 1/6th power law (see Annex A). In order to estimate the edge discharges, it is necessary to measure the distance from the position where the first or last good data are obtained for the transect. This distance is then used to assist with determination of discharge in the unmeasured portions close to the edges. One technique is described in Annex B. The total discharge can then be estimated thus:

$$Q_t = Q_{adcp} + Q_{lb} + Q_{rb} \tag{2}$$

where

$$Q_{adcp} = Q_m + Q_t + Q_b \tag{3}$$

and where

Q_t is the total discharge;

Q_{adcp} is the discharge determined by ADCP, i.e. total discharge minus edge discharge;

Q_{lb} is the discharge at the left bank edge;

Q_{rb} is the discharge at the right bank edge;

Q_m is the discharge measured by the ADCP, i.e. the total discharge in the measured bins;

Q_t is the discharge in top portion determined by the ADCP by velocity profile extrapolation;

Q_b is the discharge in bottom portion determined by the ADCP by velocity profile extrapolation.

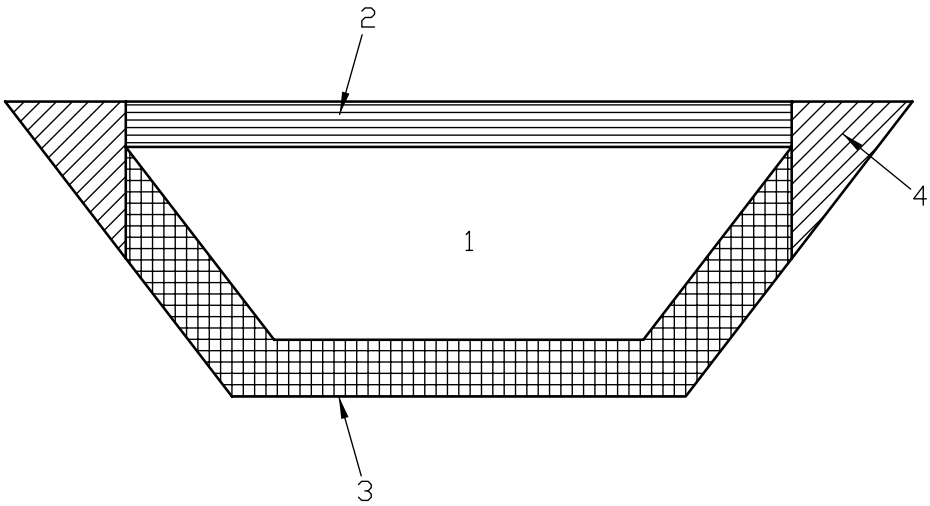

Key

1 measured area

2 top

3 bottom

4 edge

Figure 8 — The velocity is only measured in the central area, elsewhere it is estimated by extrapolation

© ISO 2012 – All rights reserved

Documents
Document Sharing Hub
Full document details: ISO_TR 24578_2012