TECHNICAL REPORT 7073

Published 1988-07-01

INTERNATIONAL ORGANIZATION FOR STANDARDIZATION • МЕЖДУНАРОДНАЯ ОРГАНИЗАЦИЯ ПО СТАНДАРТИЗАЦИИ • ORGANISATION INTERNATIONALE DE NORMALISATION

Recommended techniques for the installation of unplasticized poly(vinyl chloride) (PVC-U) buried drains and sewers

Techniques recommandées pour la mise en place des canalisations d'assainissement enterrées en polychlorure de vinyle non plastifié (PVC-U)

ISO (the International Organization for Standardization) is a worldwide federation of national standards bodies (ISO member bodies). The work of preparing International Standards is normally carried out through ISO technical committees. Each member body interested in a subject for which a technical committee has been established has the right to be represented on that committee. International organizations, governmental and non-governmental, in liaison with ISO, also take part in the work.

The main task of ISO technical committees is to prepare International Standards. In exceptional circumstances a technical committee may propose the publication of a Technical Report of one of the following types :

— type 1, when the necessary support within the technical committee cannot be obtained for the publication of an International Standard, despite repeated efforts;

— type 2, when the subject is still under technical development requiring wider exposure;

— type 3, when a technical committee has collected data of a different kind from that which is normally published as an International Standard ("state of the art", for example).

Technical Reports are accepted for publication directly by ISO Council. Technical Reports types 1 and 2 are subject to review within three years of publication, to decide whether they can be transformed into International Standards. Technical Reports type 3 do not necessarily have to be reviewed until the data they provide are considered to be no longer valid or useful.

ISO/TR 7073 was prepared by Technical Committee ISO/TC 138, *Plastics pipes, fittings and valves for the transport of fluids.*

The reasons which led to the decision to publish this document in the form of a Technical Report type 2 are explained in the Introduction.

0 Introduction

This Technical Report incorporates the installation requirements for unplasticized poly(vinyl chloride) (PVC-U) buried drains and sewers of a large number of countries. However, owing to the comprehensive nature of the requirements given, it is recognized that they cannot be regarded as being appropriate to all countries, and therefore it was decided to publish these data as a Technical Report type 2.

UDC 621.644 : 678.743.22 : 626.862

Ref. No. ISO/TR 7073 : 1988 (E)

Descriptors: underground sewage disposal, drainpipes, plastics products, unplasticized polyvinyl chloride, plastic tubes, pipe fittings, pipelines, installation.

© International Organization for Standardization, 1988 •

Printed in Switzerland

Price based on 21 pages

Documents
Document Sharing Hub

Full document details: ISO_TR 7073_1988

1 Scope

This Technical Report gives recommended procedures and considerations to be taken into account when handling and installing unplasticized poly(vinyl chloride) (PVC-U) gravity drain and sewer pipes and fittings up to, and including, 630 mm diameter.

It includes recommendations concerning trenchwork, pipelaying and backfilling, maintenance and repair, special considerations to be made when there is a high water table or frozen ground, and transport, storage and handling. Reference is made, where appropriate, to International Standards and to national requirements. These should always be referred to for further information by persons considering the use of unplasticized poly(vinyl chloride) (PVC-U) gravity drain and sewer pipes and fittings.

This Technical Report is intended to indicate what is considered to be good practice in average conditions, but it is accepted that in certain localities there may be special conditions which will necessitate modifications to the recommendations made.

The field of application and the classes of pipes used shall be in accordance with national standards and/or regulations.

2 Symbols

The symbols used in this Technical Report are illustrated in figure 1 and listed in table 1.

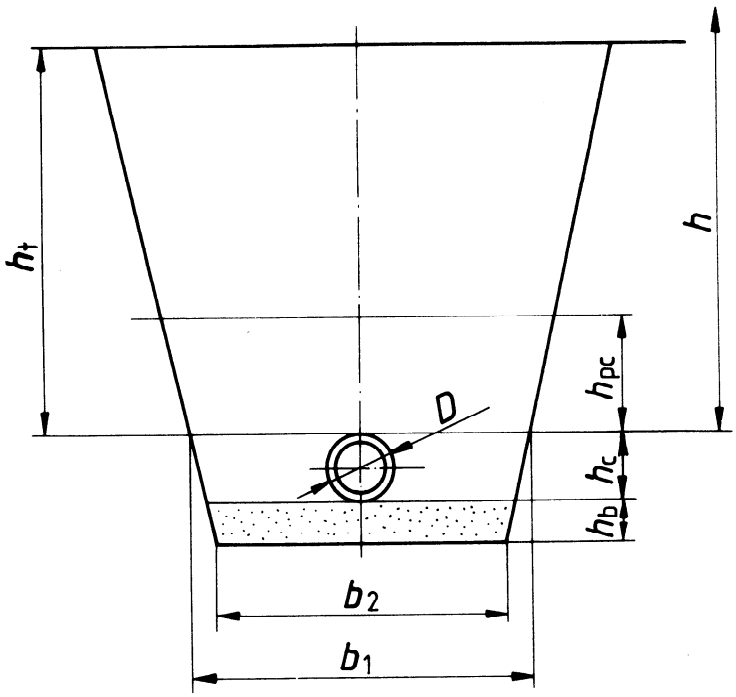

Figure 1 — Symbols

Table 1 — Symbols

Symbol	Definition
b_1	Width of trench at the level of the top of the pipe
b_2	Minimum width of the bottom of the trench
D	Nominal outside diameter of the pipe, in millimetres
h	Height from the crown of the pipe to the original ground level
h_b	Depth of the bedding
h_c	Height of the compacted sidefill material
h_{pc}	Height of the uncompacted material on top of the pipe
h_t	Height of total cover above the crown of the pipe
e	Nominal pipe wall thickness, in millimetres
S	Pipe series number
SDR	Standard dimension ratio, SDR = D/e

AVA Documents
Document Sharing Hub

Full document details: ISO_TR 7073_1988

3 Classes of pipes and fittings

In International Standards unplasticized poly(vinyl chloride) (PVC-U) pipes and fittings are classified into series according to various design criteria, e.g. soil types, excavation details, laying depths and other parameters.

It is essential to ensure that materials of the correct pipe series are used and that different pipe series are not mixed in the same installation except when specified and at the discretion of the supervizing engineer. Under special circumstances the fittings may not correspond to the pipe series.

The pipe series applicable to this Technical Report are given in table 2 which has been taken from ISO 4435.

4 Engineering considerations

4.1 General

This Technical Report recommends techniques for installation and is not a design manual. It might, therefore, seem inappropriate to consider matters concerned with the choice of the pipe series, the soil type, the trench type, the bedding and the sidefill since the designer will have estimated the soil type and the trench required, will have computed the loads to be borne by the pipeline and will have communicated the appropriate information to those whose job it is to lay the pipes.

However, it is appropriate to give some general guidance on the choice of pipe series to be used under various circumstances and the recommended limits of the deflection for these pipes. Under the conditions recommended in this Technical Report the deflections of the pipes will, for at least 50 years, not exceed values which affect the proper functioning of the pipes.

Table 2 — Nominal wall thickness

Dimensions in millimetres

Nominal outside diameter D	Nominal wall thickness e			
	Series S [1]			
	32 [2]	25	20	16,5 [3]
110	—	3	3	3,2
125	—	3	3,1	3,7
160	—	3,2	4	4,7
200	—	3,9	4,9	5,9
250	—	4,9	6,2	7,3
315	—	6,2	7,7	9,2
400	6,3	7,8	9,8	11,7
500	7,8	9,8	12,3	14,6
630	9,8	12,3	15,4	18,4

1) The number of the wall thickness range generally follows the pipe series S used in ISO 4065 except that the minimum wall thickness is 3 mm.

2) Not suitable for use in load-bearing situations.

3) Deviates from ISO 4065 for technical reasons.

Table 3 — The standard dimension ratio and the thickness-to-outside diameter ratio in relation to the pipe series

Dimensions in millimetres

Pipe series	S 32	S 25	S 20	S 16,5
SDR ($= D/e$)	65	51	41	34
e/D	—	0,02	0,025	0,03

AVA Documents
Document Sharing Hub

Full document details: ISO_TR 7073_1988

4.2 Pipe series S20 and S16,5

Pipes of these series can be used under all circumstances where normal conditions of soil, trench, method of backfilling and compaction apply.

4.3 Pipe series S25

Pipes of this series can be used when the soil condition, type of trench, method of backfilling and compaction are all favourable (see 4.5).

4.4 Pipe series S32

Pipes of this series are only recommended as linings for a complete concrete construction.

4.5 Deflection limits

For pipe series S 16,5 and S 20, the average deflection measured, between 1 and 3 months after completion of the installation, should not exceed 5 % of the nominal diameter, with a maximum value no greater than 8 % of the nominal diameter. The maximum deflection, 2 years after installation, should not exceed 10 % of the nominal diameter.

However, for pipe series S 25, in order to ensure the long-term durability of the installation, the values for the maximum deflection should not exceed 5 % of the nominal diameter when measured between 1 and 3 months after installation, and 8 % of the nominal diameter when measured 2 years after installation.

Circumstances may occur where the maximum deflection values given are exceeded. If this occurs, it is recommended that the installation be investigated to determine the cause. The cause could be, for example, point loading or unequal settlement due to differences in resistance of the various layers in the subsoil (which result in longitudinal bending).

In such cases where it can be shown that the long-term durability of the pipeline is not affected, such deflections (measured 2 years after installation) should not be greater than 1,25 times the maximum deflection values quoted above.

5 Trenches

5.1 Types of trench

5.1.1 General

The density of the backfill material, the width of the trench at the crown of the pipe, b_1, and the nominal outside diameter of the pipe, D, all influence the loads imposed on the pipe. In addition, the load on the pipe is also affected by the ratio h_t/b_1 and the properties of the backfill material.

Because of the important role played by the bedding and sidefill in helping to support the loads superimposed on the pipes, it is important that the trench design, once determined, is adhered to. It is useful, therefore, that the installer be aware of the main types of trenches. These are given in 5.1.2 to 5.1.5.

Where regulations exist governing safety at work, these should be strictly adhered to.

Documents
Document Sharing Hub
Full document details: ISO_TR 7073_1988

5.1.2 Narrow trench

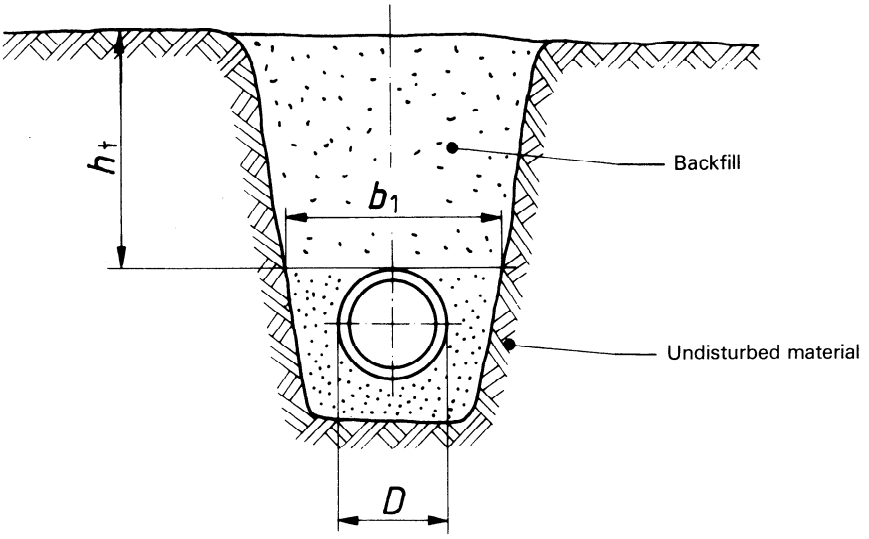

Figure 2 — Narrow trench

The narrow trench is the most satisfactory type of trench in which to lay a buried pipeline because the potential loading on the pipe is a minimum.

5.1.3 Embankment — Positive projection

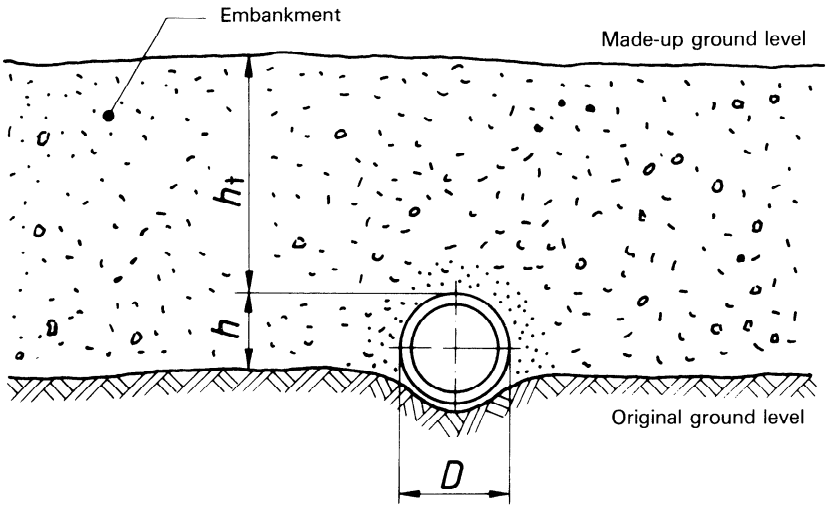

Figure 3 — Embankment — Positive projection

In this type of trench, the crown of the pipe projects above the undisturbed ground level.

The absence of undisturbed trench sides and the settlement of the made-up ground relative to that of the natural ground leads to loads greater than those which occur in a narrow trench, rendering this type of trench the least satisfactory.

AVA Documents
Document Sharing Hub

Full document details: ISO_TR 7073_1988

5.1.4 Embankment — Negative projection

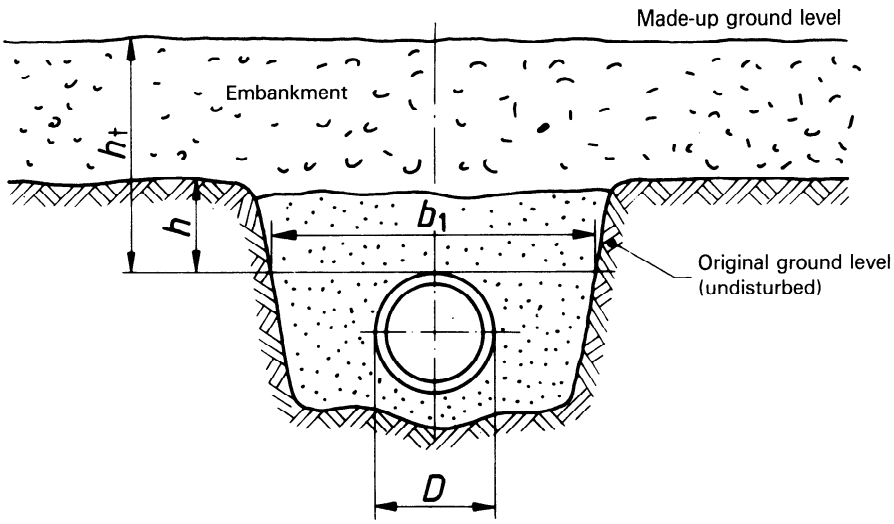

Figure 4 — Embankment — Negative projection

In this type of trench the pipe is below the undisturbed ground level and owing to friction generated between the backfill and the undisturbed trench sides, the loads imposed are somewhat less than in the positive projection embankment.

5.1.5 Wide trench

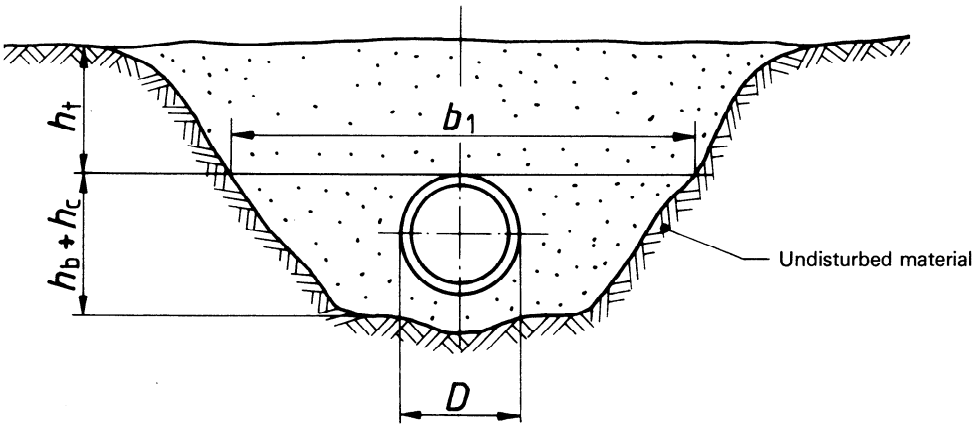

Figure 5 — Wide trench

A wide trench gives rise to loads greater than those which occur in a narrow trench owing to the greater mass of backfill bearing on the pipe, although friction between the undisturbed trench side and the backfill reduces the load to some extent. The load will be generally less than that which occurs in the negative projection embankment owing to the absence of infill and therefore the absence of relative settlement between the natural ground level and the infill material.

5.1.6 Other types of trench

Other trench types, more or less specialized for particular applications, exist. However, the four types shown should be sufficient to illustrate that loading conditions can vary greatly according to the configuration of the trench, and of the pipe within the trench, and that it is thus extremely important to dig trenches, lay pipes and backfill in accordance with instructions given.

Documents
Document Sharing Hub

Full document details: ISO_TR 7073_1988

5.2 Construction

5.2.1 Digging the trench

The trench should not be dug too far in advance of pipe laying and should be backfilled as soon as possible after pipe laying. Therefore, only the length of trench sufficient for the day's pipe laying should be opened at one time. In frost conditions it may be necessary to protect the trench bottom so that frozen layers are not left under the pipe.

The width at the bottom of the trench should allow sufficient room for working but the minimum width will be the nominal pipe diameter plus 0,4 m (dimension b_2, see figure 1). In general, the height above the crown of the pipe for sewer pipes or for pipes passing under roads or verges, should be a minimum of 1 m (and for house and gully connecting pipes it should be 0,7 m). These dimensions do not apply to drains and sewers installed under buildings. The trench should be dug sufficiently deep to allow for a suitable bed (dimension h_b, see figure 1) to be placed in preparation for laying the pipe. Prior to laying this bed, the trench bottom should be made to be reasonably uniform. Hand trimming should be carried out if necessary and any local hard or soft spots removed and filled with well-tamped granular material (e.g. sand, gravel or broken stone). Ground which is unstable, especially if waterlogged, requires special consideration and de-watering may be necessary. For installations that require the bottom of the trench to be supported (national regulations shall be observed in such cases), expert advice should be obtained to ensure that the trench bottom is evenly supported throughout its length.

Trenches which are to be used for more than one pipe should be cut in accordance with the general recommendations set out above. The widths of these trenches should be sufficient to allow proper compaction of the soil between the pipes when laid. It is recommended that the trench specifications laid down in national standards be adhered to.

5.2.2 Precautions to be taken during trench digging

Safety regulations should be observed at all times.

Excavated material should be deposited a distance of at least 0,45 m from the edge of the trench, and the proximity and height of the spoil bank should not be allowed to endanger the stability of the excavation.

Hand excavation should proceed in stages, limited by the height to which a person can throw a shovelful of excavated material.

The use of explosives may be necessary in hard rock. Blasting should be carried out only under thorough and competent supervision and with the written permission of the engineer or authority in charge of the work. Further guidance on blasting may be found in national codes and regulations.

All pipes, ducts, cables, mains or other services exposed in the trench should be effectively supported as specified in national regulations. The permanent support of existing mains and service pipes requires careful consideration to avoid exposing them to longitudinal stress. Where existing services cross the line of the new trench, the objective should be to make their new support as nearly as possible uniform with that already provided on either side of the trench. When existing services lie along the line of the new trench, they should be re-founded on adequately and uniformly compacted material using appropriate bedding for the size and depth of pipes or services concerned.

Where trench support is required, it should be adequate to support the trench walls. In the case of unstable ground, such as running sand, additional measures such as timbering the floor of the trench, de-watering operations, use of a moisture barrier film, or consolidation by freezing or other chemical means may be necessary. The appropriate bedding should not be laid until the trench bottom has been stabilized. The proximity of traffic or other special circumstances, such as nearby retaining walls, will influence the support necessary. In such cases, and particularly where the ground is unstable, it may be advisable to leave some of the supports in position. The individual pipe lengths to be laid, the depth of the trench and the method of excavation to be used, e.g. back hoe, crane and bucket, have to be taken into consideration by the engineer in deciding the spacing of the struts and the consequent sizes of the walls etc.

Further details of trench supporting may be found in national codes and regulations.

5.2.3 Pipe bedding and sidefill

After the trench has been dug and the trench bottom has been prepared, the bedding for the pipes should be prepared. The material excavated from the trench may be suitable as pipe bedding and sidefill (see 5.2.3.1). If not, suitable material will have to be provided from another source (it may be available on site).

AVA Documents
Document Sharing Hub

Full document details: ISO_TR 7073_1988

5.2.3.1 Excavated material

If it is intended to use excavated material as bedding and sidefill to pipes it should be homogeneous and should comply in general with the gradings included in the shaded area of figure 6, provided that the maximum particle size does not exceed 10 % of the nominal pipe diameter or 60 mm, whichever is the smaller.

If the excavated material does not comply with these specifications, it may be used provided that special instructions are given.

5.2.3.2 Material not excavated from the trench

If suitable excavated material is not available, other material should be used. The most suitable material is gravel or broken stone from 5 mm to 16 mm in size, since it is easy to compact. Sand, or a mixture of sand and gravel, or gravel with a maximum size of 10 % of the nominal pipe diameter or 60 mm, whichever is the smaller, are all suitable materials.

5.2.3.3 Bedding

A non-compacted layer of bedding material, of minimum thickness h_b = 100 mm (see figures 1 and 7), should be provided

a) for narrow trenches and negative projection embankments across the whole trench width;

b) for other trenches, for a minimum width of two pipe diameters on either side of the pipe.

The surface of the bedding shall follow the gradient of the pipeline.

5.2.4 Pipe-laying

Before proceeding with pipe-laying, each pipe should be examined for damage. Any unacceptable pipes should be set aside and marked conspicuously. Spigot ends, sockets and couplings and sealing rings shall be free from damage.

The pipes and fittings should be laid on the prepared bedding so that they maintain substantially continuous contact with the bedding. Small depressions should be made in the bed to accommodate the larger diameters of the pipe sockets or couplings. The pipe sockets and couplings should be bedded and the depressions carefully filled, taking care to ensure that no voids are created under or around the sockets.

5.2.5 Sidefilling and backfilling

After the pipes have been laid, and any required testing has been carried out, sidefilling can proceed. The material used for sidefilling (see 5.2.3) should be placed around the pipes and thoroughly compacted by hand in successive layers. This process should be carried out evenly on both sides of the pipe up to the centre-line of the pipe (see figure 7, dimension l_1). It is most important that no voids are left under the pipes and that the sidefill is very firmly compacted between the pipes and the trench walls. Trench sheeting or timbering should be progressively withdrawn as this work proceeds.

The next layer (see figure 7, dimension l_2) of sidefill should be continued up to a height level with the top of the pipe. This layer should be achieved by successively depositing and compacting thin layers of sidefill until the required depth of sidefill l_2 is obtained. It is advisable to leave the crown of the pipe exposed during this compaction.

The third layer (see figure 7, dimension l_3) should extend to a level 0,3 m above the top of the pipe and should be compacted with light rammers on either side of the pipe only. There should be no ramming of this layer on top of the pipe. On no account should any further material be tipped into the trench before the third layer has been completed. Filling and tamping should then proceed evenly so as to maintain an even pressure on both sides of the pipe.

As indicated by the arrows in figure 7, the final layers of dimensions l_4 and l_5 should be compacted over the full width of the trench to the specified Proctor value[1)] for compaction. Allowance should be made for the final layers of backfill for top-soil or road surfacing. Backfilling with frozen backfill is not allowed.

Where there is a high ground water level or other similar wet conditions, backfilling should be carried out quickly to avoid the flotation of the pipes.

Where trench supports are used in the construction of the trench, they should be carefully removed as each layer of backfill is laid.

1) The Proctor value expresses the relationship between the dry unit weight (density) and the water content of a soil for a given compactive effort.

AVA Documents
Document Sharing Hub

Full document details: ISO_TR 7073_1988