TECHNICAL REPORT

ISO/TR 8612

First edition
1997-06-15

Ophthalmic instruments — Tonometers

Instruments ophtalmiques — Tonomètres

Reference number
ISO/TR 8612:1997(E)

AVA Documents
Document Sharing Hub

Full document details: ISO_TR 8612_1997

Contents

Page

1 Scope 1

2 Classification of tonometers 1

3 General design 2

4 Specific construction requirements and limits of error 2

5 Marking 9

Annexes

A Principles of tonometry 10

B Criteria for the clinical evaluation of different types of tonometers 15

C Verification of mechanical and mechanical-electrical impression tonometers 19

D Verification of mechanical-optical applanation tonometers having a constant diameter applanation circle 35

E Verification of air-impulse tonometers 40

F Bibliography 45

© ISO 1997

All rights reserved. Unless otherwise specified, no part of this publication may be reproduced or utilized in any form or by any means, electronic or mechanical, including photocopying and microfilm, without permission in writing from the publisher.

International Organization for Standardization
Case Postale 56 • CH-1211 Genève 20 • Switzerland
Internet central@iso.ch
X.400 c=ch; a=400net; p=iso; o=isocs; s=central

Printed in Switzerland

Documents
Document Sharing Hub

Full document details: ISO_TR 8612_1997

Foreword

ISO (the International Organization for Standardization) is a worldwide federation of national standards bodies (ISO member bodies). The work of preparing International Standards is normally carried out through ISO technical committees. Each member body interested in a subject for which a technical committee has been established has the right to be represented on that committee. International organizations, governmental and non-governmental, in liaison with ISO, also take part in the work. ISO collaborates closely with the International Electrotechnical Commission (IEC) on all matters of electrotechnical standardization.

The main task of technical committees is to prepare International Standards, but in exceptional circumstances a technical committee may propose the publication of a Technical Report of one of the following types:

— type 1, when the required support cannot be obtained for the publication of an International Standard, despite repeated efforts;

— type 2, when the subject is still under technical development or where for any other reason there is the future but not immediate possibility of an agreement on an International Standard;

— type 3, when a technical committee has collected data of a different kind from that which is normally published as an International Standard ("state of the art", for example).

Technical Reports of types 1 and 2 are subject to review within three years of publication, to decide whether they can be transformed into International Standards. Technical Reports of type 3 do not necessarily have to be reviewed until the data they provide are considered to be no longer valid or useful.

ISO/TR 8612, which is a Technical Report of type 1, was prepared by Technical Committee ISO/TC 172, *Optics and optical instruments,* Subcommittee SC 7, *Ophthalmic optics and instruments.*

This document is being issued as a type 1 Technical Report providing a classification of tonometers and a description of the different principles of tonometry, as well as a compilation of specific construction requirements and test methods for these different types of tonometers.

At the time of publication of ISO/TR 8612, work on an International Standard on fundamental requirements and test methods for tonometers has already been started and it is intended to withdraw this Technical Report when the International Standard is published.

AVA Documents Document Sharing Hub

Full document details: ISO_TR 8612_1997

Introduction

The tonometer is one of the most important measuring instruments for the detection and diagnosis of glaucoma. The term "glaucoma" indicates diseases of the eye which may show an increase of the intraocular pressure (IOP) as one of the common symptoms and which may lead to lesions of the optic nerves and thus to scotomata and even blindness. The development of a glaucoma can follow an increase in IOP before pathological changes occur in the fundus of the eye. Results obtained by the use of tonometers give an indirect measurement of IOP and these results represent a close approach to the actual IOP.

Requirements relating to tonometers without subclause 4.5 (see [1], [2], [10], [11] and [13]) and the instructions for their verification without annex E were accepted at the meeting of the Committee on Standardization of Tonometers (ICST) of the International Council of Ophthalmology held in Paris in 1974.

The assessment of the IOP is made more difficult because each of these indirect methods, owing to the contact with the eye as a physical system, effects a change of volume and thus a pressure change as a result of the force exerted on the eye during the measurement procedure. Hence, the user does not measure the IOP in an unstressed eye but rather an increased pressure raised more or less by the measuring procedure.

The different principles of tonometry are described in annex A. Procedures for verifying requirements laid down for tonometers are described in annexes C to E.

It is recognized that each tonometer type may employ different parameters and/or correlations in order to assess IOP indirectly. Furthermore, within a given type, variations in specific design are anticipated. It follows that each type and/or design of a tonometer which fulfil the clinical criteria (annex B) may require a test method unique to the design of the instrument and set of physical criteria; by necessity, test method and requirements are clearly specific to the design of the instrument. This Technical Report is not, however, intended to preclude other types or designs not covered therein.

Documents
Document Sharing Hub
Full document details: ISO_TR 8612_1997

Ophthalmic instruments — Tonometers

1 Scope

This Technical Report specifies requirements and test methods for instruments designed to determine intraocular pressure (IOP). It lays down criteria for the clinical evaluation of different tonometer types (annex B), test methods for tonometers (annexes C to E) and physical criteria (clause 4) which, when satisfied by the instrument under test, verify that its measurement calibration meets the clinically relevant criteria.

This Technical Report is applicable to impression tonometers of the mechanical and mechanical-electrical type, to applanation tonometers of the mechanical-optical and mechanical-electrical type as well as air-impulse tonometers.

2 Classification of tonometers

2.1 Mechanical and mechanical-electrical impression tonometers

Instruments which measure the deformation of the cornea resulting from the application of the tonometer itself or the tonometer measuring head, i.e. the sinking-in of the plunger. The deformation is indicated by a digital or analog display or by a recording device.

2.2 Mechanical-optical applanation tonometers

Instruments which measure either the force necessary to flatten the cornea with a pressure body to a diameter between 2,5 mm and 4,0 mm depending on the type of instrument, or the diameter of the applanation circle at a known measuring force, indicated in scale divisions by a digital display or by a recording device.

2.3 Electromechanical applanation tonometers

Instruments which, by means of a measuring head, measure the force necessary to flatten the cornea to the diameter specified by the tonometer type. The force or the pressure is indicated in scale divisions by a digital display or by a recording device.

2.4 Air-impulse tonometers

Instruments employing a brief air impulse of increasing force which either measure the time or measure the instrument plenum chamber pressure necessary to deform the cornea to a consistent configuration. The time or the pressure is indicated by a digital display or by a recording device.

Air-impulse tonometers do not mechanically touch the cornea during the measuring procedure.

AVA Documents
Document Sharing Hub

Full document details: ISO_TR 8612_1997

3 General design

3.1 The mechanical parts of the tonometers shall be composed of material with sufficient mechanical resistance and invariability.

3.2 The electrical parts of the tonometers shall be composed of material with sufficient mechanical resistance and electrical invariability.

3.3 The surfaces of the tonometer that are intended to come into contact with the cornea shall be composed of rust-free and acid-resistant steel or of material which is inert to biological tissue.

4 Specific construction requirements and limits of error

4.1 Mechanical impression tonometers

4.1.1 Effective load

The effective load of the lever-pointer-plunger system when the tonometer is in a vertical position shall be:

— (5,5 ± 0,15) g when indicating scale division “5”;

— (5,5 ± 0,20) g when indicating scale division “10”.

4.1.2 Mass and additional loads

The mass of the tonometer, without handle, shall be (16,5 ± 0,5) g.

The additional loads shall be

— with inscription 7,5: (2,0 ± 0,02) g;

— with inscription 10,0: (4,5 ± 0,02) g;

— with inscription 15,0: (9,5 ± 0,02) g.

4.1.3 Friction between plunger and plunger sleeve

When the tonometer is moved slowly and uniformly from the horizontal position into the vertical position with the plunger on the upper stop, the plunger shall begin to slide into the footplate hole before the angle of the tonometer axis to the horizontal exceeds 25°. During this manoeuvre the lever shall not touch the plunger.

NOTE — A drawing of footplate and plunger is given in figure C.5.

The tonometer shall be able to slide easily in its handle (see C.2.5).

4.1.4 Dimensions of footplate and plunger

The dimensions of the footplate shall be as given in table 1.

AVA Documents
Document Sharing Hub
Full document details: ISO_TR 8612_1997

Table 1 — Dimensions of footplate

Dimensions in millimetres

Feature		Dimension
Diameter		10,1 ± 0,2
Radius of curvature of the spherical front surface		15,0 ± 0,25
Outside diameter of the spherical front surface, d_{min}		9,0 min.
Either	Diameter of the recess or counterbore on the front surface up to a minimum height h of 1,5 mm, d_2	3,3 max.
	Radius of the inside edge curvature, r	0,2 max.
Or	Diameter of the circle at the transition between footplate curvature and edge curvature of the recess of counterbore (central area), d_g	3,7 max.

The dimensions of the plunger shall be as given in table 2.

Table 2 — Dimensions of plunger

Dimensions in millimetres

Feature	Dimension
Diameter at the front surface up to a minimum height of 1,5 mm	3,0 ± 0,03
Radius of curvature of the spherical front surface	15,0 ± 0,75
Radius of the edge curvature	0,25 ± 0,015
Extension of the plunger below the spherical footplate, h_{max}	3,0 max.

4.1.5 Surface condition

The front surfaces of the footplate and of the plunger shall be smooth when felt with a finger and, when examined by unmagnified corrected vision under direct illumination, shall be free from surface imperfections that would damage the eye. The outside surface of the front surface of the footplate and the inside edge at the recess of counterbore shall be rounded.

4.1.6 Scale

The scale may be arranged parallel or inclined to the axis of the plunger. The scale shall be divided into at least 15 equal scale divisions (−1 to 15 or 0 to 15 respectively); the distance between two adjacent lines shall be equal to a plunger displacement of 0,05 mm, so that the displacement of the plunger shall correspond to the values given in table 3 depending on the number of scale divisions. The scale shall show integers only.

AVA Documents
Document Sharing Hub

Full document details: ISO_TR 8612_1997

Table 3 — Plunger displacement

Values in millimetres

Scale division		Plunger displacement values
from	to	
−1	5	0,30 ± 0,01
−1	10	0,55 ± 0,02
−1	15	0,80 ± 0,03
−1	18	0,95 ± 0,05
0	5	0,25 ± 0,01
0	10	0,50 ± 0,02
0	15	0,75 ± 0,03
0	18	0,90 ± 0,05

The division of the scale shall consist of lines. The lines shall be straight, of equal width and directed towards the axis of the pointer. No line shall be wider than 1/4 of the distance between two lines nor more than 0,25 mm.

4.1.7 Pointer

In the area of the scale, the pointer shall not be wider than the smallest width of a line in the area of the scale. If the pointer moves over the scale, it shall overlap the shortest lines by at least one-third; the tip shall not extend beyond the scale lines. The distance between pointer and the plane of the scale shall not be greater than 1,0 mm in the area of the scale.

4.1.8 Plunger

At some point between scale indications 5 and 10, the plunger axis and the lower surface of the lever shall form a right angle at the point of contact.

4.1.9 Scale indication

When the instrument is tested on a test block with a radius of curvature of 14,75 mm, the pointer shall indicate −1,0 ± 0,2 on the scale; when tested on a test block with a radius of curvature of 16 mm, it shall indicate 0 ± 0,2 on the scale.

With the tonometer in position on the test block, the scale reading shall not vary by more than 0,4 scale divisions when the plunger is turned or moved laterally or when the lever is moved laterally.

4.1.10 Verticality of tonometer

When the tonometer is picked up without restraint at the holding point of the handle, the axis shall naturally assume a vertical position.

4.1.11 Recording device

If a recording device is used, the limits of error for the record shall be the same as for the scale readings.

4.2 Mechanical-electrical impression tonometers

4.2.1 Effective load

The effective load of the plunger measured with the instrument ready for use shall be (5,5 ± 0,1) g within the measuring range and with the measuring head in a vertical position.

AVA Documents Document Sharing Hub

Full document details: ISO_TR 8612_1997

4.2.2 Mass and additional loads

The mass of the tonometer measuring head, without handle, shall be (16,5 ± 0,5) g.

The additional loads shall be:

— with inscription 7,5: (2,0 ± 0,02) g;

— with inscription 10,0: (4,5 ± 0,02) g;

— with inscription 15,0: (9,5 ± 0,02) g.

4.2.3 Friction between plunger and plunger sleeve

After the tonometer measuring head is moved slowly and uniformly from the horizontal position into the vertical position after the plunger is moved 4 mm, the plunger shall begin to slide into the footplate hole before the angle of the tonometer axis to the horizontal exceeds 25°.

The tonometer shall be able to slide easily in its handle.

4.2.4 Dimensions of footplate and plunger

The dimensions of the footplate shall be as given in table 1. The dimensions of the plunger shall be as given in table 2.

4.2.5 Surface condition

The front surfaces of the footplate and of the plunger shall be smooth when felt with a finger and, when examined by unmagnified corrected vision under direct illumination, shall be free from surface imperfections that would damage the eye. The outside edge of the front surface of the footplate and the inside edge at the recess or counterbore shall be rounded.

4.2.6 Scale

The scale shall be divided into at least 15 equal scale divisions (–1 to 15 or 0 to 15, respectively); the distance between two adjacent lines shall be equal to a plunger displacement of 0,05 mm, so that the displacement of the plunger shall correspond to the values given in table 3, depending on the number of scale divisions. The scale shall show integers only.

If there is a digital read-out in a digital display, the last digit shall be changed by one unit for a displacement of the plunger of not more than 0,005 mm.

The interval between the dividing lines shall be not less than 4 mm and may be subdivided. The division of the scale shall consist of lines. The lines shall be straight, of equal width and directed towards the axis of the pointer. No line shall be wider than ¼ of the distance between two lines, nor more than 0,25 mm. The scale shall show integers only.

4.2.7 Pointer

In the area of the scale, the pointer shall be no wider than the smallest width of a line in the area of the scale. If the pointer moves over the scale, it shall overlap the shortest lines by at least one-third; the tip shall not extend beyond the scale lines.

4.2.8 Testing on test block

When the tonometer measuring head is placed on a test block having a curvature radius of 14,75 mm or 16,00 mm, the scale reading shall be –1,0 or 0,0 respectively, with a tolerance of ± 0,2 of a scale interval or ± 0,2 as indicated by the final digits.

When the tonometer measuring head is placed on the attached test block marked “15”, the scale reading shall not exceed 15 with a tolerance of ± 0,2 of a scale interval or ± 0,2 as indicated by the final digits.

AVA Documents Document Sharing Hub

Full document details: ISO_TR 8612_1997

With the tonometer measuring head in position on the test block, the scale reading shall not vary by more than 0,2 scale divisions or ± 0,2 as indicated by the final digits (i.e. 0,01 mm displacement of the plunger) when the plunger is turned or moved laterally.

4.2.9 Effect of variations in temperature or voltage on scale readings

4.2.9.1 At temperatures between 15 °C and 30 °C at constant operating voltage, the scale reading within the measuring range shall not vary by more than ± 0,2 of a scale interval or ± 0,2 as indicated by the final digits (0,01 mm displacement of the plunger).

4.2.9.2 During a fluctuation in operating voltage of ± 10 % at 20 °C, the scale reading shall not vary by more than ± 0,2 of a scale interval or ± 0,2 as indicated by the final digits (0,01 mm displacement of the plunger).

4.2.10 Recording device

If a recording device is used, the limits of error for the record shall be the same as for the scale readings.

If the tonometer is provided with a digital display, with each digit indicated by seven linear segments, it shall be possible to check the correct functioning of every segment.

4.3 Mechanical-optical applanation tonometers

4.3.1 Diameter of applanation circle

Mechanical-optical applanation tonometers which measure the force needed to obtain a given area of applanation shall have a constant value between 2,5 mm and 4,0 mm for the diameter of the applanation circle.

The tolerance for the diameter of the applanation circle shall be ± 0,02 mm.

4.3.2 Surface of pressure body

The front surface of the pressure body shall be smooth when felt with a finger and, when examined by unmagnified corrected vision under direct illumination, shall be free from surface imperfections that would damage the eye and shall have a diameter of at least 6,0 mm.

4.3.3 Measuring force

The measuring force shall be continuously adjustable within the minimum range from 0 to 49,0 mN[1)], without the range being altered and without the use of additional weights. The measured value of the force shall be clearly legible on a linearly divided scale.

The change in force required to move the pressure body in the opposite direction (reverse span) at the point of transition shall not exceed ± 0,29 mN.

4.3.4 Scale

Lines shall be used as graduations on the measuring scale. The lines shall be straight, of equal width and shall be engraved or otherwise permanently marked. No line shall be wider than 1/4 of the distance between two lines.

---

1) 1 mN = 10^{-3} N; 1 N is that force which, when applied to a body having a mass of 1 kg, gives it an acceleration of $1 m \cdot s^{-2}$.

AVA Documents
Document Sharing Hub

Full document details: ISO_TR 8612_1997

One scale unit shall represent either 0,98 mN or 1,96 mN. The main scale graduations shall be numbered. The width of the reference mark shall not be greater than the smallest width of the graduation lines on the measuring scale.

4.3.5 Tolerance for measurement of force

When the pressure body is adjusted to the verification position, the tolerance for the measured value of the force within the measuring range shall be ± 1,5 % of the nominal value, but not less than ± 0,49 mN, over a temperature range from 15 °C to 30 °C.

4.3.6 Recording device

If a recording device is used, the limits of error shall be the same as those specified in 4.3.5.

4.3.7 Tonometer used as limit gauge

If the tonometer is to be used as a limit gauge only, the diameter of the applanation circle and the measuring force shall be constant. Tolerances specified in 4.3.1 and 4.3.5 shall be applied.

4.4 Mechanical-electrical applanation tonometers

4.4.1 Diameter of applanation circle

4.4.1.1 For tonometers which measure the force required in applanation, the diameter of the applanation circle shall have a constant value not less than 2,5 mm.

The tolerance for the diameter of the applanation circle shall be ± 0,02 mm.

4.4.1.2 For tonometers which measure the diameter of the applanation circle, the force shall be constant. The diameter of the applanation surface shall be measured and the tolerance specified in 4.4.1.1 shall be applied.

In determining the pressure (force/area), the diameter of the applanation surface area can be equal to the diameter of the front surface of the measuring head.

4.4.2 Surface of pressure body

The front surface of the pressure body shall be smooth when felt with a finger and, when examined by unmagnified corrected vision under direct illumination, shall be free from surface imperfections that would damage the eye and shall have a diameter of at least 6,0 mm.

4.4.3 Measuring force

The measuring force shall be continuously adjustable within the minimum range from 0 to 49,0 mN, without the range being altered and without the use of additional weights. The measured value of the force shall be indicated on a linear scale or typed in scale divisions using a recorder, or indicated digitally.

The determination of the force applied to the front surface of the pressure body within the circle of applanation shall also be permitted to be made from a concentric circular plane the diameter of which is equal to or smaller than the radius of the circle of applanation using a mechanical-electrical measuring device.

The change of force required to move the pressure body in the opposite direction (reverse span) at the point of transition shall not exceed ± 0,29 mN.

4.4.4 Scale

If the force applied to flatten the cornea is recorded on a scale, lines shall be used as graduations on the measuring scale. The lines shall be straight, of equal width and shall be engraved or otherwise permanently marked. No line shall be wider than ¼ of the distance between two lines, nor more than 0,25 mm in width.

AVA Documents Document Sharing Hub

Full document details: ISO_TR 8612_1997

One scale unit shall represent either 0,98 mN or 1,96 mN. The main scale graduations shall be numbered. The width of the reference mark shall not be greater than the smallest width of the graduation lines on the measuring scale.

4.4.5 Pointer

If the force applied to flatten the cornea is recorded on a scale, the pointer shall not be wider than the smallest width of a line in the area of the scale. If the pointer moves over the scale, it shall overlap the shortest lines by at least one-third; the tip shall not extend beyond the scale lines.

4.4.6 Tolerance for measurement of force

When the pressure body is adjusted to the verification position of its range of movement, the tolerance for the measured value of the force within the measuring range shall be ± 1,5 % of the nominal value, but not less than ± 0,49 mN, over a temperature range from 15 °C to 30 °C.

4.4.7 Recording device

If a recording device is used, the limits of error shall be the same as those specified in 4.4.6.

4.5 Air-impulse tonometers

4.5.1 Alignment

Each type of air-impulse tonometer shall include mechanical and optical or opto-electronic means for achieving alignment relative to the patient's cornea, in three dimensions. The alignment shall be observed by means of an optical or a camera/monitor system.

4.5.2 Indication of measurements

The display shall be digital.

In the case of segment digital display, it shall be possible to check the correct functioning of every segment of each digit.

The measuring range shall extend from "12" to at least "50".

4.5.3 Verification of display

For the verification using apparatus such as that described in annex E, the correlation between the digital display and the measured value of force in the optimum alignment of the system, the air impulse on a face 2,5 mm in diameter for the named types shall be as given in table 4.

Table 4 — Correlation between digital display and measured value of the force of air impulse
for Non-Contact Tonometer II (NCT II) and XPERT Non-Contact Tonometer (XPERT NCT)

Digital display reading	Force of air impulse mN	Digital display reading	Force of air impulse mN	Digital display reading	Force of air impulse mN	Digital display reading	Force of air impulse mN
—	—	21	9,0	31	16,0	41	23,0
12	1,5	22	9,7	32	16,7	42	23,7
13	2,3	23	10,4	33	17,4	43	24,4
14	3,7	24	11,1	34	18,1	44	25,1
15	4,6	25	11,8	35	18,8	45	25,8
16	5,4	26	12,5	36	19,5	46	26,5
17	6,1	27	13,2	37	20,2	47	27,2
18	6,9	28	13,9	38	20,9	48	27,9
19	7,7	29	14,6	39	21,6	49	28,6
20	8,3	30	15,3	40	22,3	50	29,3

AVA Documents Document Sharing Hub
Full document details: ISO_TR 8612_1997

Other tables of correlation between digital display and measured value of the force of air impulse apply to other air-impulse tonometers. In these cases the manufacturer is required to publish this table with a detailed description of the verification procedure and apparatus.

4.5.4 Effect of variation in temperature or voltage on display

For digital display in the temperature range from 15 °C to 30 °C at constant operating voltage, the maximum permissible errors are:

— between digital readings "12" and "30": ± 1 as indicated by the final digit;

— between digital display readings "31" and "50": ± 2 as indicated by the final digits.

During a fluctuation in the operating voltage of ± 10 % at 20 °C, the maximum permissible error shall be ± 1 as indicated by the final digits.

5 Marking

5.1 Each tonometer shall be marked with the following information:

a) name of manufacturer or trademark;

b) country of manufacture;

c) serial number.

5.2 On each applanation tonometer with constant diameter of the applanation circle and variable measuring force, the diameter of the applanation circle shall be indicated, unless its value is 3,06 mm.

5.3 Each instrument and its necessary accessories, except for the pressure body of the mechanical-optical applanation tonometers and the measuring head of the mechanical-electrical impression tonometers and mechanical-electrical applanation tonometers, shall be marked with an individual serial number. Each tonometer measuring head with its associated plunger shall be identically numbered. All other parts of tonometers shall not be marked.

5.4 Each removable objective/tube unit shall bear the same number as the air impulse tonometer to which it relates.

5.5 On each air-impulse tonometer, the measurement range shall be indicated as given in the following example: "Measurement range from 12 to 50 on digital display".

AVA Documents
Document Sharing Hub

Full document details: ISO_TR 8612_1997

Annex A
(informative)

Principles of tonometry

A.1 General

The following principles will prove clinically useful in obtaining a measurement which is an acceptable correlation with the IOP.

a) Impression principle

A plunger deforms the cornea to obtain a state of quasi-equilibrium between external and internal pressure and then the size of the "indentation" is measured.

b) Applanation principles

A plane surface is pressed against the cornea so as to determine the force necessary to flatten a defined area (Goldmann principle) or to determine the size of a flattened area subjected to a defined force (Maklakoff principle).

Both principles are based on the Imbert-Fick law, which states that if a plane surface is applied with force F to a thin spherical membrane within which a pressure p_t exists at equilibrium the following equation is valid:

$$p_t = \frac{F}{A} \qquad \ldots (1)$$

where

A is the area of the applied surface;

p_t is the pressure increase due to the measuring procedure (see figure A.1).

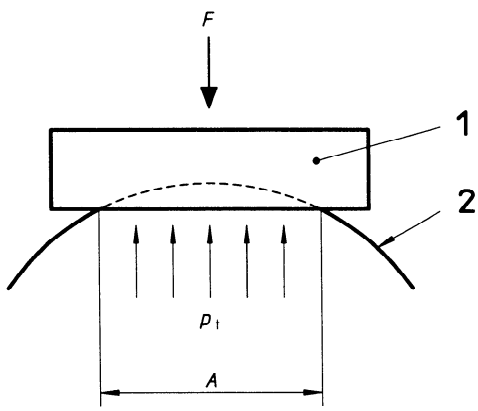

1 Pressure body 2 Membrane

Figure A.1 — General principle of tonometry

A.2 Impression tonometry

Using an impression tonometer, Friedenwald investigated the relationship between the quotient F/p_t and the extent of the indentation (see figure A.2). The scale reading R of the tonometer was a measure of this relationship. The result of these measurements is given by:

Documents
Document Sharing Hub
Full document details: ISO_TR 8612_1997

$$p_t = \frac{F}{a + bR} \quad \ldots (2)$$

where a and b are constants.

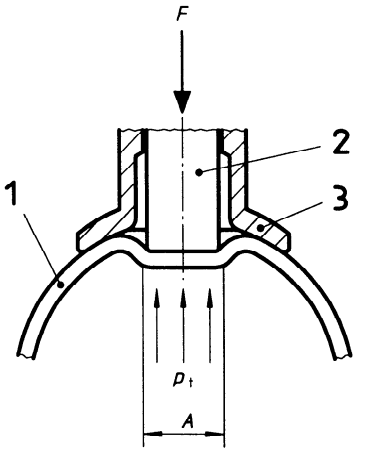

1 Cornea 2 Plunger 3 Footplate

Figure A.2 — Principle of impression tonometry

The pressure p_t determined in this way represents the pressure in the eye under the additional stress produced by the tonometer and the plunger pressure. However, knowledge of the pressure p_0 in the unstressed eye is more important. Both parameters, p_t and p_0, could only be interrelated after the concept of "rigidity" was introduced into the calculations [3]. Friedenwald demonstrated empirically that the resistance of the eye to change in the IOP can be described by a rigidity coefficient, K, according to the following equation:

$$K = \frac{\log p_t - \log p_0}{V_t} \quad \ldots (3)$$

where V_t is the volume of indentation.

If this equation is solved for log p_0 and if p_t is replaced by equation (2), the following basic equation for impression tonometry is obtained:

$$\log p_0 = \log \frac{F}{a + bR} - KV_t \quad \ldots (4)$$

In order to avoid the need to determine the rigidity whenever a measurement is made with the impression tonometer, conversion tables were produced for the pressure/scale-division relationship for practical use with the tonometer, using average values for a and b and using K = 0,021 5 mm^{-3} which was calculated statistically.

A.3 Applanation tonometry

A.3.1 Mechanical-optical applanation tonometry

The theory of applanation tonometry (see figure A.3) is derived in a similar, but theoretically more exact, fashion from the Imbert-Fick law. In this case, owing to the physical properties of the cornea and its wetting liquid, two terms are added to equation (1) to give the following equation:

AVA Documents Document Sharing Hub

Full document details: ISO_TR 8612_1997

$$p_t = \frac{F}{A} - p_M + p_N \qquad \ldots (5)$$

where

p_M is a pressure caused by the characteristic rigidity of the eye;

p_N is the pressure due to surface tension of the liquid, the wetting properties of the cornea and the flattening surface of the pressure body.

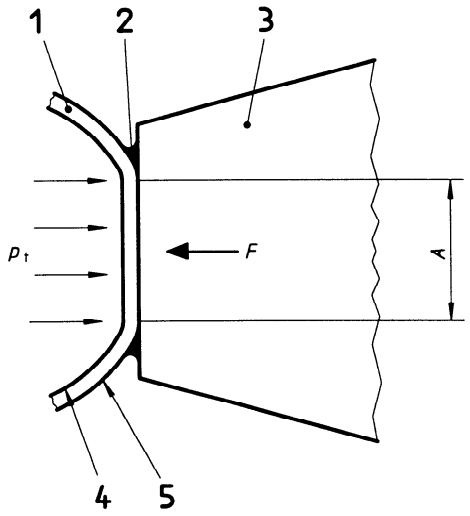

Key

1 Cornea
2 Meniscus
3 Pressure body
4 Descemet-membrane
5 Bowman-membrane

Figure A.3 — Principle of applanation tonometry

The rigidity of the eye does not play as important a role in the applanation principle as it does in the impression principle, since the pressure on the eye is affected by the applied force alone. For a constant and sufficiently small applanation area, the following simple relationship, derived by Goldmann and Schmidt [5], is valid for p_0 and p_t.

$$p_0 = 0{,}98\, p_t \qquad \ldots (6)$$

It was concluded that, as a good approximation, $p_0 \approx p_t$ is valid for an applanation circle diameter of 3,06 mm.

A.4 Air-impulse tonometry

Air-impulse tonometry differs from constant-face or constant-force applanation tonometry in that the cornea is flattened by a defined air impulse instead of by a mechanical surface. The time to flatten the cornea or the pressure in the pump system at the time of flattening is employed as means of assessing the IOP.

The following example illustrates the principle on which the method is based (see figure A.4). An air impulse, generated by a pump system (PL), passes through a nozzle (N) in the centre of the objective (O) and strikes the surface of the patient's cornea at a distance coinciding with the optimal alignment of the system. The axis of the nozzle coincides with the axis of the objective.

AVA Documents Document Sharing Hub
Full document details: ISO_TR 8612_1997