TECHNICAL SPECIFICATION

ISO/TS 22239-2

First edition
2009-12-15

Road vehicles — Child seat presence and orientation detection system (CPOD) —

Part 2: Resonator specification

Véhicules routiers — Système de détection de la présence d'un siège enfant et de son orientation (CPOD) —

Partie 2: Spécifications relatives aux résonateurs

Reference number
ISO/TS 22239-2:2009(E)

Documents
Document Sharing Hub
© ISO 2009

Full document details: ISO_TS 22239-2_2009

PDF disclaimer

This PDF file may contain embedded typefaces. In accordance with Adobe's licensing policy, this file may be printed or viewed but shall not be edited unless the typefaces which are embedded are licensed to and installed on the computer performing the editing. In downloading this file, parties accept therein the responsibility of not infringing Adobe's licensing policy. The ISO Central Secretariat accepts no liability in this area.

Adobe is a trademark of Adobe Systems Incorporated.

Details of the software products used to create this PDF file can be found in the General Info relative to the file; the PDF-creation parameters were optimized for printing. Every care has been taken to ensure that the file is suitable for use by ISO member bodies. In the unlikely event that a problem relating to it is found, please inform the Central Secretariat at the address given below.

COPYRIGHT PROTECTED DOCUMENT

© ISO 2009

All rights reserved. Unless otherwise specified, no part of this publication may be reproduced or utilized in any form or by any means, electronic or mechanical, including photocopying and microfilm, without permission in writing from either ISO at the address below or ISO's member body in the country of the requester.

ISO copyright office
Case postale 56 • CH-1211 Geneva 20
Tel. + 41 22 749 01 11
Fax + 41 22 749 09 47
E-mail copyright@iso.org
Web www.iso.org

Published in Switzerland

© ISO 2009 – All rights reserved

Documents
Document Sharing Hub

Full document details: ISO_TS 22239-2_2009

Contents

Page

Foreword ... iv

1 Scope ... 1

2 Normative references ... 1

3 Terms and definitions ... 1

4 CPOD resonator components ... 2

5 Coil requirements ... 2

6 Electrical properties ... 3
6.1 Digital resonator protocol ... 3
6.2 Subcarrier bitstream ... 5
6.3 Modulation ... 7
6.4 Modulation parameters ... 16

7 Resonator timing ... 18
7.1 General ... 18
7.2 Power-up ... 18
7.3 Reset ... 18
7.4 Relevant timing and reset parameters ... 19

8 Electrical and environmental parameters ... 20
8.1 Absolute maximum ratings ... 20
8.2 Operating ranges ... 21
8.3 Storage conditions ... 21

9 CPOD resonator compatibility test ... 21

10 Resonator environmental qualification ... 22
10.1 Application profile ... 22
10.2 Common test parameters ... 23
10.3 Operating states ... 24
10.4 Parametrical test and parameter checking ... 24
10.5 Qualification tests ... 25
10.6 Electromagnetic compatibility (EMC) test ... 38
10.7 Electrostatic discharge (ESD) test ... 47
10.8 Magnetic field stress test ... 50
10.9 Qualification flow chart ... 51

Annex A (normative) **CPOD resonator compatibility test set-up** ... 52

Annex B (normative) **CPOD resonator compatibility test parameters** ... 58

Annex C (normative) **Continuous parameter check** ... 61

Annex D (normative) **CPOD reference resonator** ... 63

© ISO 2009 – All rights reserved

Documents
Document Sharing Hub
Full document details: ISO_TS 22239-2_2009

Foreword

ISO (the International Organization for Standardization) is a worldwide federation of national standards bodies (ISO member bodies). The work of preparing International Standards is normally carried out through ISO technical committees. Each member body interested in a subject for which a technical committee has been established has the right to be represented on that committee. International organizations, governmental and non-governmental, in liaison with ISO, also take part in the work. ISO collaborates closely with the International Electrotechnical Commission (IEC) on all matters of electrotechnical standardization.

International Standards are drafted in accordance with the rules given in the ISO/IEC Directives, Part 2.

The main task of technical committees is to prepare International Standards. Draft International Standards adopted by the technical committees are circulated to the member bodies for voting. Publication as an International Standard requires approval by at least 75 % of the member bodies casting a vote.

In other circumstances, particularly when there is an urgent market requirement for such documents, a technical committee may decide to publish other types of document:

— an ISO Publicly Available Specification (ISO/PAS) represents an agreement between technical experts in an ISO working group and is accepted for publication if it is approved by more than 50 % of the members of the parent committee casting a vote;

— an ISO Technical Specification (ISO/TS) represents an agreement between the members of a technical committee and is accepted for publication if it is approved by 2/3 of the members of the committee casting a vote.

An ISO/PAS or ISO/TS is reviewed after three years in order to decide whether it will be confirmed for a further three years, revised to become an International Standard, or withdrawn. If the ISO/PAS or ISO/TS is confirmed, it is reviewed again after a further three years, at which time it must either be transformed into an International Standard or be withdrawn.

Attention is drawn to the possibility that some of the elements of this document may be the subject of patent rights. ISO shall not be held responsible for identifying any or all such patent rights.

ISO/TS 22239-2 was prepared by Technical Committee ISO/TC 22, *Road vehicles*, Subcommittee SC 12, *Passive safety crash protection systems*.

ISO/TS 22239 consists of the following parts, under the general title *Road vehicles — Child seat presence and orientation detection system (CPOD)*:

— *Part 1: Specifications and test methods*

— *Part 2: Resonator specification*

— *Part 3: Labelling*

© ISO 2009 – All rights reserved
Documents
Document Sharing Hub
Full document details: ISO_TS 22239-2_2009

Road vehicles — Child seat presence and orientation detection system (CPOD) —

Part 2:
Resonator specification

1 Scope

This part of ISO/TS 22239 specifies the child seat presence and orientation detection (CPOD) resonator as part of the CPOD system. It defines the electrical and environmental requirements to be met by the resonators as a condition for CPOD compatibility.

2 Normative references

The following referenced documents are indispensable for the application of this document. For dated references, only the edition cited applies. For undated references, the latest edition of the referenced document (including any amendments) applies.

ISO 10605:2008, *Road vehicles — Test methods for electrical disturbances from electrostatic discharge*

ISO 11452-1, *Road vehicles — Component test methods for electrical disturbances from narrowband radiated electromagnetic energy — Part 1: General principles and terminology*

ISO 11452-2, *Road vehicles — Component test methods for electrical disturbances from narrowband radiated electromagnetic energy — Part 2: Absorber-lined shielded enclosure*

ISO 11452-3, *Road vehicles — Component test methods for electrical disturbances from narrowband radiated electromagnetic energy — Part 3: Transverse electromagnetic mode (TEM) cell*

ISO 20653, *Road vehicles — Degrees of protection (IP-Code) — Protection of electrical equipment against foreign objects, water and access*

ISO/TS 22239-1:2009, *Road vehicles — Child seat presence and orientation detection system (CPOD) — Part 1: Specifications and test methods*

ISO 22241-1, *Diesel engines — NOx reduction agent AUS 32 — Part 1: Quality requirements*

IEC 60068-2-11, *Environmental testing — Part 2: Tests. Test Ka: Salt mist*

IEC 60068-2-38, *Environmental testing — Part 2: Tests. Test Z/AD: Composite temperature/humidity cyclic test*

IEC 60068-2-60, *Environmental testing — Part 2: Tests — Test Ke: Flowing mixed gas corrosion test*

3 Terms and definitions

For the purposes of this document, the terms and definitions given in ISO/TS 22239-1 apply.

Documents
Document Sharing Hub

© ISO 2009 – All rights reserved

Full document details: ISO_TS 22239-2_2009

4 CPOD resonator components

The CPOD resonator shall consist of a coil and of electronics. It might be encapsulated by a housing as indicated in Figure 1. In order to pass the resonator compatibility test successfully, the different components shall meet the requirements defined. The transponders shall be passive, i.e. they shall take their energy out of the magnetic field produced by the CPOD sensor.

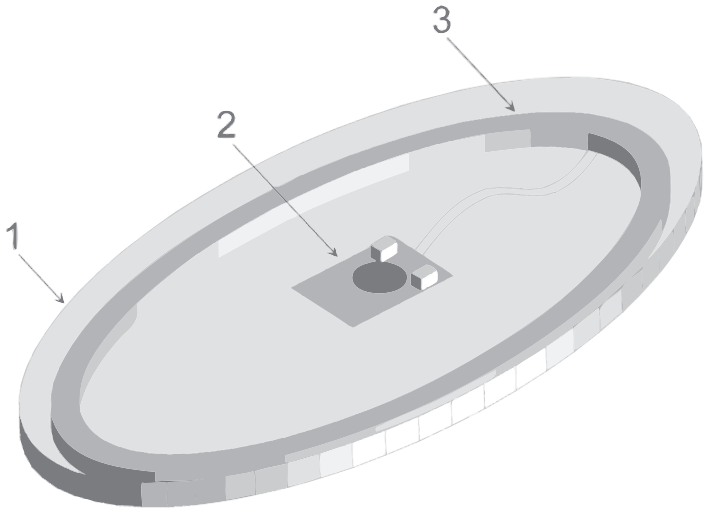

Key

1 encapsulation/housing
2 electronics
3 coil

Figure 1 — CPOD resonator components

5 Coil requirements

The CPOD resonator coil shall be an air coil with an elliptical shape. The geometry of the resonator probe coil is defined as indicated in Figure 2.

© ISO 2009 – All rights reserved
Documents
Document Sharing Hub
Full document details: ISO_TS 22239-2_2009

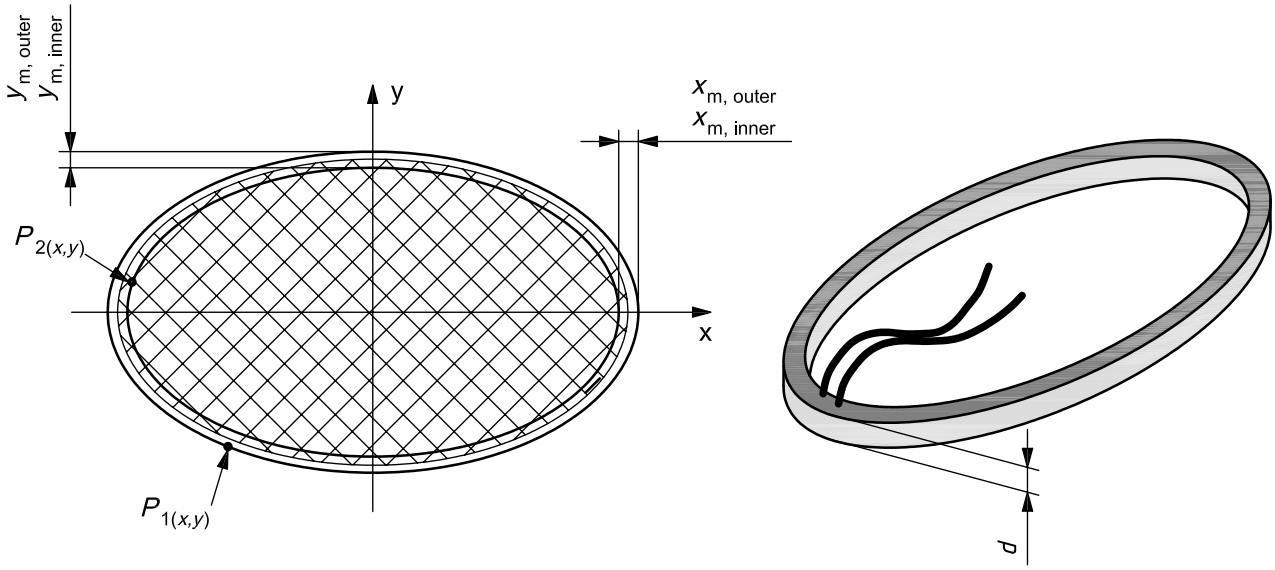

Key

$P_{1(x,y)}$, $P_{2(x,y)}$ position vectors determined by Equation (1)

Figure 2 — Resonator coil geometry

The position vectors of the inner and outer shape of the coil are described by Equation (1) with parameters as specified in Table 1.

$$P_{(x,y)} = \left(\frac{x}{x_m}\right)^2 + \left(\frac{y}{y_m}\right)^2 = 1 \qquad (1)$$

Table 1 — Coil geometry parameters

Dimensions in millimetres

Parameter	min.	max.
$x_{m,outer}$	—	60
$y_{m,outer}$	—	35
$x_{m,inner}$	53	—
$y_{m,inner}$	28	—
d	—	8

6 Electrical properties

6.1 Digital resonator protocol

By generating a modulated magnetic field that is detected in the receiving antennae of the CPOD sensor in the seat, the resonator shall transmit a digital data protocol which is built up as indicated in Figure 3.

© ISO 2009 – All rights reserved

Documents
Document Sharing Hub
Full document details: ISO_TS 22239-2_2009

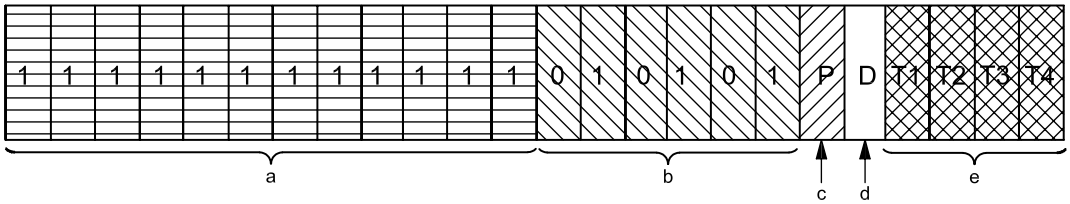

a	Header:	Sequence of 12 bits with logical bit value = 1.
b	Synchronization sequence:	Sequence of three logical 0/1 transitions.
c	Parity bit:	Odd parity for T1-, T4-bit.
d	Divider bit:	Subcarrier divider bit: 1 → divider by 40, left resonator; 0 → divider by 56, right resonator.
e	Child seat type:	T1 ... T4.

Figure 3 — CPOD resonator protocol

Additional information about the child seat is provided via the child seat type bits as defined in Table 2.

Table 2 — Child seat type classification

Type	T4	T3	T2	T1	Description
0	0	0	0	0	not allowed
1	0	0	0	1	rear-facing child seat
2	0	0	1	0	forward-facing child seat
3	0	0	1	1	convertible child seat, resonators in stiff connection with child seat
4	0	1	0	0	convertible child seat, resonators not connected with child seat
5	0	1	0	1	booster cushion
6	0	1	1	0	carry-cots
7	0	1	1	1	not yet defined
8	1	0	0	0	not yet defined
9	1	0	0	1	not yet defined
10	1	0	1	0	not yet defined
11	1	0	1	1	not yet defined
12	1	1	0	0	not yet defined
13	1	1	0	1	not yet defined
14	1	1	1	0	not yet defined
15	1	1	1	1	not yet defined

The protocol shall be repeated cyclically if the exiting magnetic field is still present. Thus, after the T4 bit, the next bit shall again be the first bit of the header part of the data protocol (see Figure 4).

© ISO 2009 – All rights reserved
Documents
Document Sharing Hub
Full document details: ISO_TS 22239-2_2009

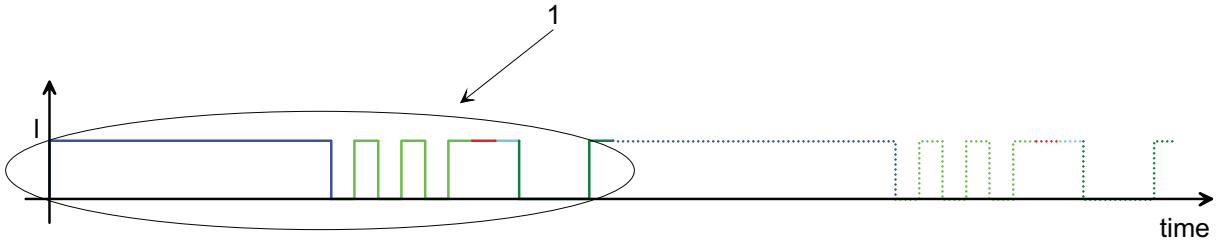

Key

1 resonator protocol

Figure 4 — Cyclical sending of the resonator protocol

Depending on whether it is a left or a right resonator, the bit frequency of the data protocol varies as shown in Table 3.

Table 3 — Data protocol bit frequency

Resonator type	Parameter	Data protocol frequency
left	$f_{data,left}$	$f_{TX}/40/8 = f_{TX}/320$
right	$f_{data,right}$	$f_{TX}/56/8 = f_{TX}/448$

6.2 Subcarrier bitstream

Every resonator protocol bit value in accordance with Figure 3 logically summarizes eight consecutive bits of the same logical value (hereafter defined as subcarrier bits) with another, higher bit frequency (hereafter defined as subcarrier frequency). The relation between data protocol bits and subcarrier bits is indicated in Figure 5.

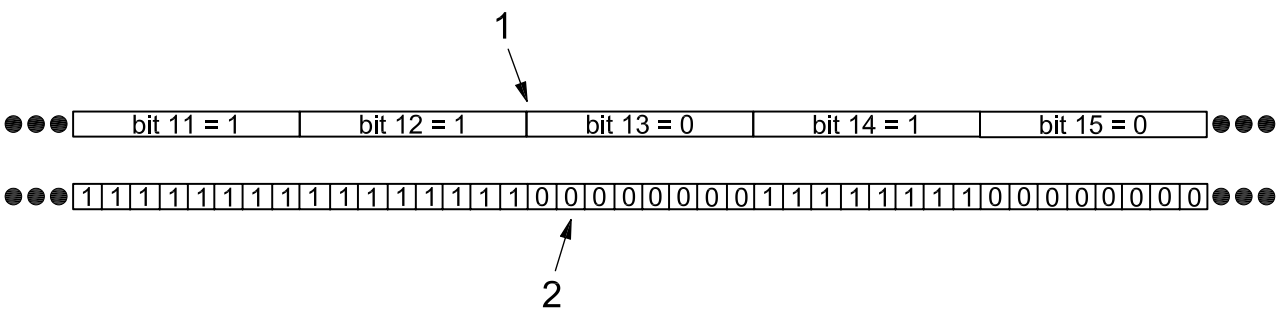

Key

1 resonator data protocol

2 subcarrier bitstream

Figure 5 — Difference between original and resonator Manchester coding

In order to prepare the subcarrier bits for transmission, every subcarrier bit value shall be Manchester coded, as indicated in Figure 6.

© ISO 2009 – All rights reserved

Documents
Document Sharing Hub
Full document details: ISO_TS 22239-2_2009

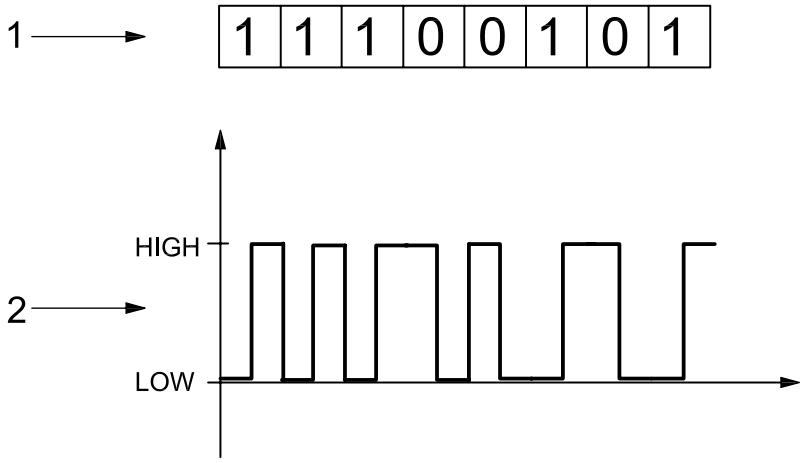

Key

1 subcarrier bit values

2 resulting Manchester code

Figure 6 — Manchester coding of subcarrier bit values

A subcarrier bit value of 1 shall cause a LOW to HIGH transition in the Manchester code pattern. A subcarrier bit value of 0 shall cause a HIGH to LOW transition on the Manchester pattern.

Table 4 — Subcarrier bit frequency, $f_{subcarrier}$

Resonator type	Parameter	Data protocol frequency
left	$f_{subcarrier}$	$f_{TX}/40$
right	$f_{subcarrier}$	$f_{TX}/56$

If there is a 0 to 1 transition or a 1 to 0 transition in the resonator data protocol, the resulting Manchester code shows a ±180° phase shift (phase shift keying, PSK).

The frequency of the subcarrier bitstream, as well as the phase angle of the concerned Manchester code, shall be used to modulate the magnetic field generated by the resonator, e.g. Figure 7 shows the main structure of the analogue front end of a resonator. The impedance of the LC oscillator is controlled by the Manchester code derived by the subcarrier bitstream, e.g. a HIGH level in the Manchester code leads to state one of the oscillators impedance (HIGH state); a low level in the Manchester Code leads to state two (LOW state) of the oscillator's impedance.

© ISO 2009 – All rights reserved

Documents
Document Sharing Hub
Full document details: ISO_TS 22239-2_2009

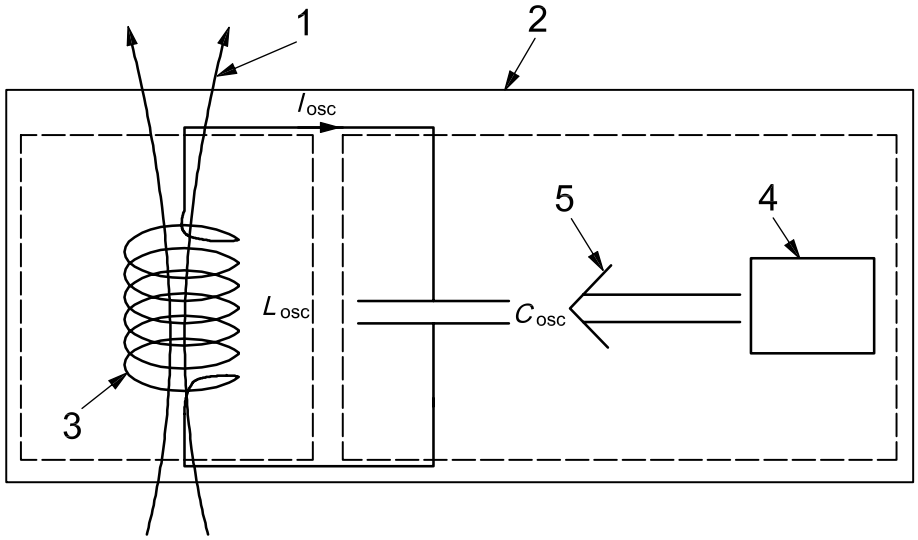

Key

1 magnetic field
2 resonator
3 resonator coil
4 control logic
5 impedance variation of LC oscillator

Figure 7 — Exemplified electrical structure of resonator analogue front end

6.3 Modulation

6.3.1 General

The resonators shall produce a phase modulation in the receiving antenna which is demodulated by the CPOD electronic control unit (ECU). Depending on the magnetic field supplying the resonators with energy, these shall produce a corresponding magnetic field that assures compatibility with all CPOD-compatible systems. The Manchester code of the bitstream specified in 6.2 shall be used to control physically the state of modulation.

The ability of a CPOD resonator to generate a phase modulation in the receiving antenna, which can be evaluated by the CPOD sensor, is characterized by two parameters: the parameter W determines the ability of the resonator to produce sufficient receiving amplitude in a CPOD-compatible sensor after demodulation; the parameter N specifies a maximum noise power at the demodulator's output.

Both parameters are derived using the following procedure, whose blocks are explained in 6.3.2 to 6.3.10.

© ISO 2009 – All rights reserved

Documents
Document Sharing Hub
Full document details: ISO_TS 22239-2_2009

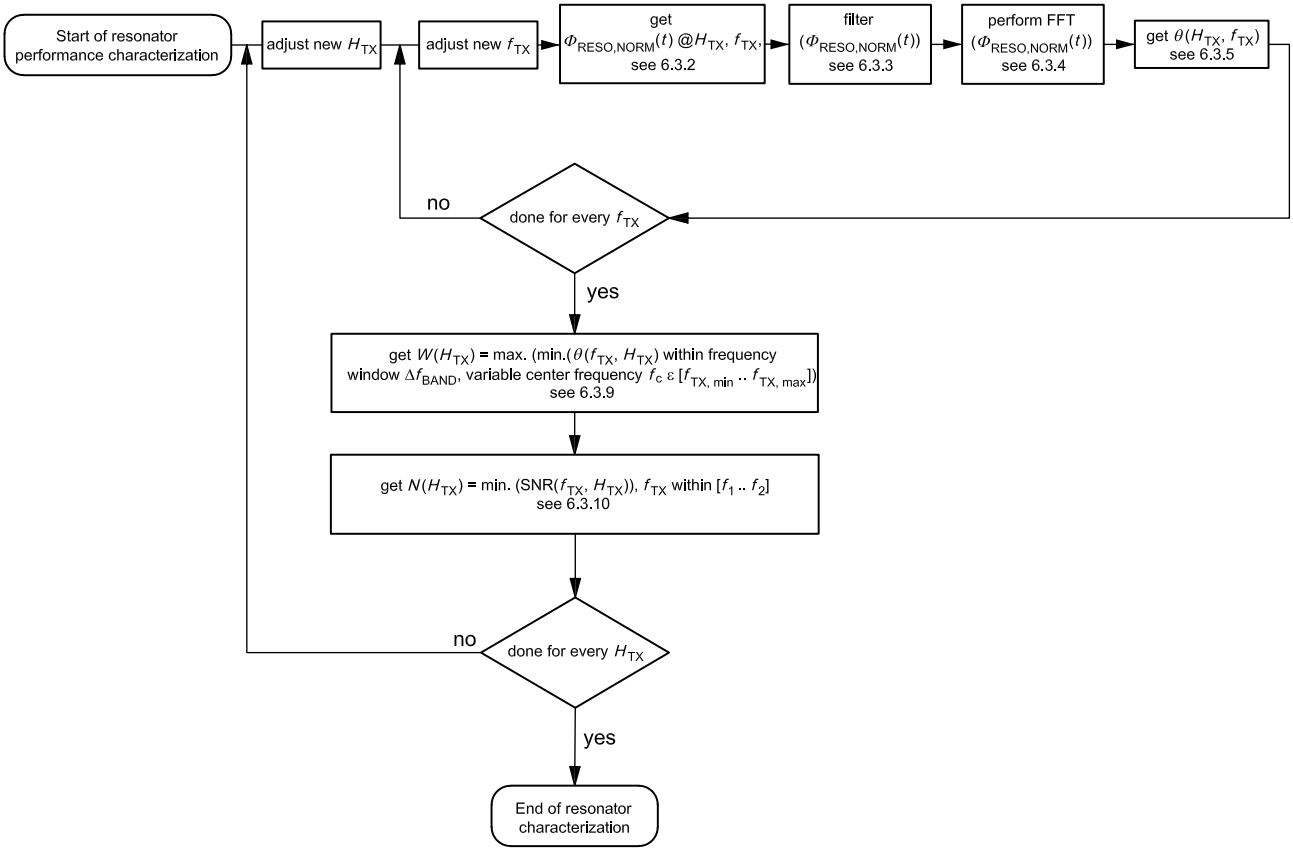

Figure 8 — Procedure to derive $W(H_{TX})$ and $N(H_{TX})$ for magnetic field strength H_{TX}

6.3.2 Useful resonator signal $\Phi_{RESO,NORM}(t)$

Since CPOD sensors usually have a high magnetic coupling between transmitting and receiving antennae, the useful resonator signal in the resonator magnetic field reduces to the component being perpendicular to the exiting magnetic transmitter field, which is also flooding the receiving antennae. The amplitude phase diagram in Figure 9 shows the relation between exciting magnetic field and resulting resonator magnetic flux.

© ISO 2009 – All rights reserved
Documents
Document Sharing Hub
Full document details: ISO_TS 22239-2_2009

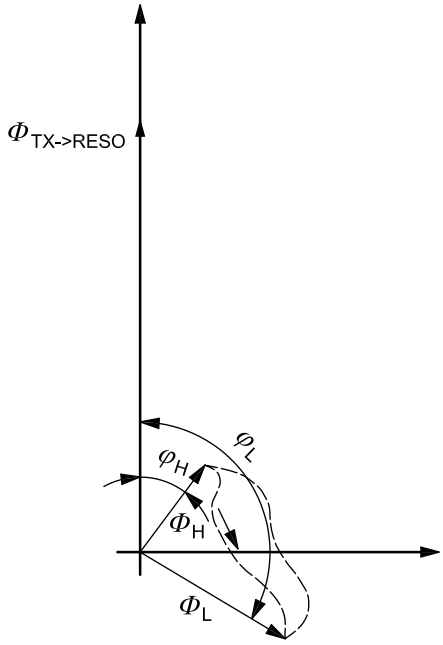

Key

$\Phi_{TX \rightarrow RESO}$ transmitter magnetic flux component supplying resonator

φ_H phase angle between resonator field and resonator magnetic flux, high state of modulation

Φ_H amplitude of resonator magnetic flux, high state of modulation

φ_L phase angle between transmitter field and resonator magnetic flux, low state of modulation

Φ_L amplitude of resonator magnetic flux, low state of modulation

Figure 9 — Resonator amplitude phase diagram

The magnetic flux generated by the resonator, which is flooding the receiving antenna, superposes to the part of the magnetic flux generated by the transmitting antenna, which also floods the receiving antenna. The resulting magnetic flux Φ_{RX} in the receiving antenna is indicated in Figure 10.

© ISO 2009 – All rights reserved

Documents
Document Sharing Hub
Full document details: ISO_TS 22239-2_2009

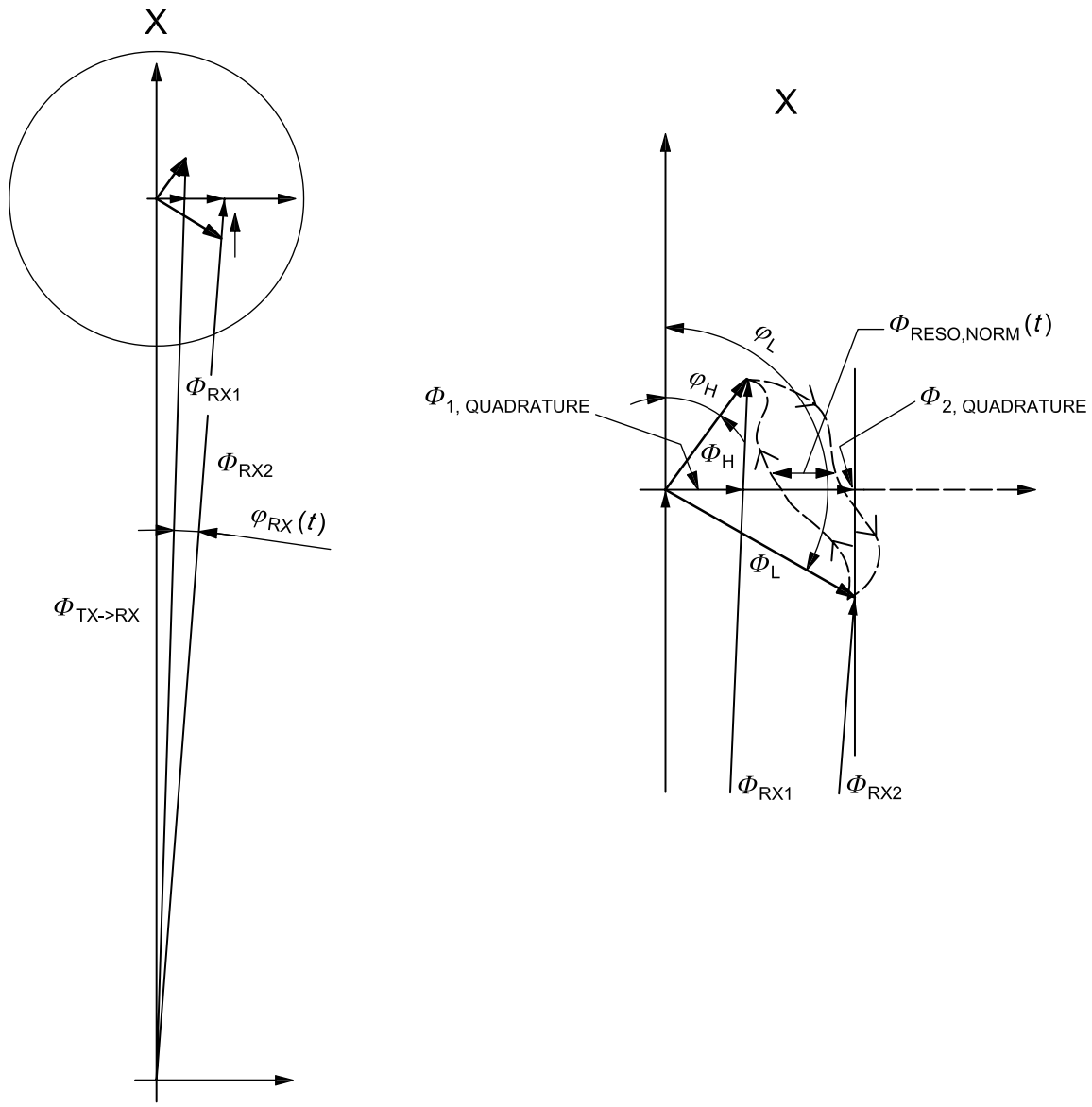

Key

$\varphi_{RX}(t)$	phase angle modulation in receiving antenna
$\Phi_{TX\rightarrow RX}$	transmitter field component flooding receiving antenna
φ_H	phase angle between transmitter field and transponder magnetic flux, high state of modulation
Φ_H	amplitude of resonator magnetic flux flooding receiving antenna high state of modulation
φ_L	phase angle between transmitter field and transponder magnetic flux, low state of modulation
Φ_L	amplitude of resonator magnetic flux flooding receiving antenna, low state of modulation

Figure 10 — Resulting magnetic flux in receiving antenna

Only the quadrature part of the magnetic flux generated by the resonator underlies CPOD compatibility requirements (depending on the physical realization of the resonator, the part of the magnetic flux being in phase with the supplying transmitter field may vary drastically).

© ISO 2009 – All rights reserved
Documents
Document Sharing Hub
Full document details: ISO_TS 22239-2_2009

The useful signal $\Phi_{\text{RESO,NORM}}(t)$ is defined by Equation (2):

$$\Phi_{\text{RESO,NORM}}(t) = \text{abs}[\underline{\Phi}_{\text{RESO}}(t)] \times \sin\left\{\arg[\underline{\Phi}_{\text{RESO}}(t)]\right\}) = \text{abs}(\underline{\Phi}_{\text{RESO}}(t)) \times \sin[\varphi(t)] \quad (2)$$

where

$\underline{\Phi}_{\text{RESO}}(t)$ is the complex amplitude of Φ_{RESO} over time;

$\arg[\underline{\Phi}_{\text{RESO}}(t)]$ is the phase difference between Φ_{TX} and $\underline{\Phi}_{\text{RESO}}(t)$ (see Figure 10).

6.3.3 Lowpass filtering

Before performing the Fast Fourier transform (FFT) on $\Phi_{\text{RESO,NORM}}(t)$, the signal shall be filtered by a third order lowpass filter since, usually, the influence of the harmonics on the demodulator output of the CPOD sensor can be neglected for frequency components above the 9th harmonic. Table 5 specifies the lowpass filter to be used.

Table 5 — Definition of lowpass filter

Parameter	min.	max.
End of pass band $W_{\text{p_low}}$ kHz	20	20
Beginning of stop band $W_{\text{s_low}}$ kHz	100	100
Attenuation in pass band $R_{\text{p_low}}$ dB	0	1
Attenuation in stop band $R_{\text{s_low}}$ dB	60	—

6.3.4 Spectral contents of $\Phi_{\text{RESO,NORM}}(t)$

Although Manchester coded bitstream explained in 6.2 contains only two discrete states (HIGH and LOW), the transition in the magnetic flux generated by the resonator takes a certain transition time, as indicated by the dotted lines in Figure 10. Figure 11 shows an example for the $\Phi_{\text{RESO,NORM}}(t)$ as a function of time.

© ISO 2009 – All rights reserved

Documents
Document Sharing Hub
Full document details: ISO_TS 22239-2_2009

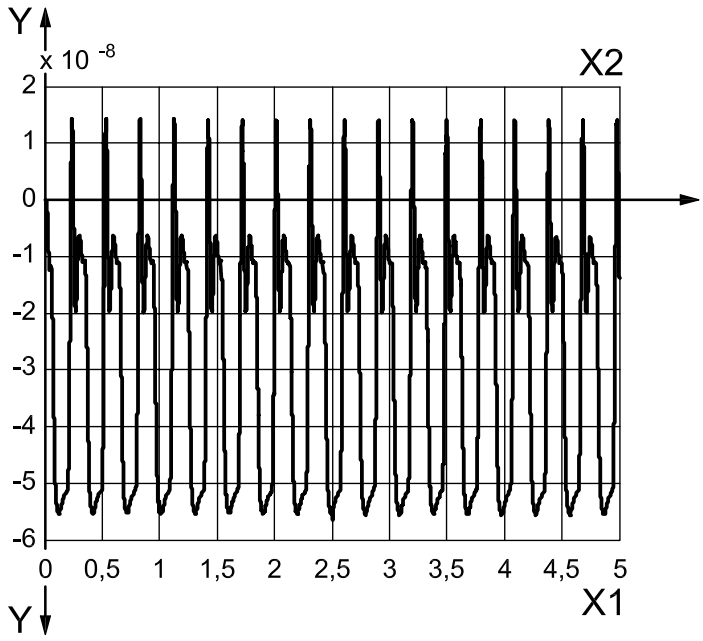

Key

X1 time (ms)

X2 $\Phi_{RESO,NORM}(t)$ vs time

Y resonator magnetic flux (V·s)

Figure 11 — Transitions during modulation (exemplified)

Obviously, the spectral content of the magnetic flux contains the fundamental with subcarrier bitstream frequency, several harmonics, as shown in Figure 12.

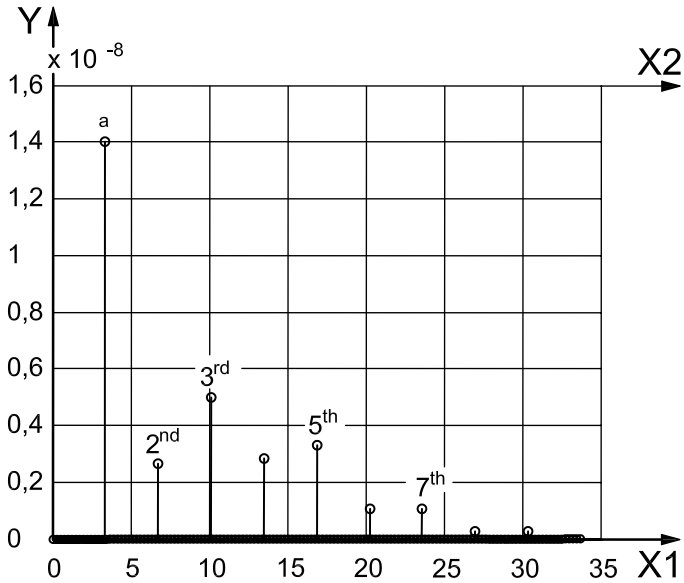

Key

X1 f (kHz)

X2 spectral contents of $\Phi_{RESO,NORM}(t)$

Y magnetic flux amplitude (V·s)

[a] Fundamental.

Figure 12 — Spectral contents of $\Phi_{RESO,NORM}(t)$ (exemplified)

© ISO 2009 – All rights reserved

Documents
Document Sharing Hub
Full document details: ISO_TS 22239-2_2009

The spectral contents of $\Phi_{RESO,NORM}(t)$ depends on the frequency f_{TX} and the magnetic field strength H_{TX} supplying the resonator.

6.3.5 The useful signal $\Theta(f_{TX},H_{TX})$

The spectral contents of $\Phi_{RX}(t)$ (see Figure 12 for example) shows the subcarrier bit frequency (fundamental) of the phase modulation $\Phi_{RX}(t)$. The even harmonics (2nd, 4th, 6th, etc.) usually do not have any influence on the performance. Therefore, they are not addressed in this part of ISO/TS 22239 and may have, as well as their phase angle relation with respect to the fundamental, arbitrary values.

Only the odd harmonics (fundamental, 3rd, 5th, etc.) are taken to define and to calculate the useful signal $\Theta(f_{TX},H_{TX})$, as follows:

$\Theta(f_{TX},H_{TX})$ = fundamental – 1/3*3rd harmonic – 1/5*5th harmonic – 1/7*7th harmonic – 1/9*9th harmonic, etc.

Getting the values for $\Theta(f_{TX},H_{TX})$ over the complete f_{TX} frequency range qualitatively leads to the curve shown in Figure 13.

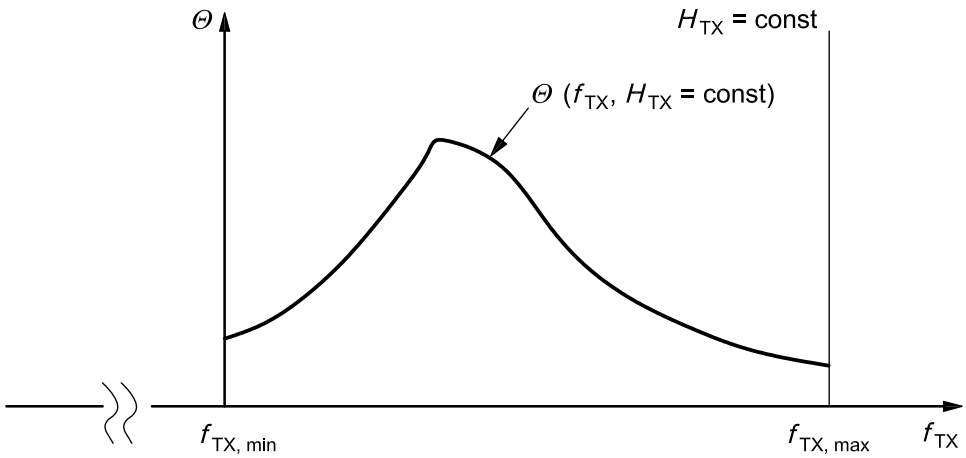

Figure 13 — Qualitative curve of $\Theta(f_{TX},H_{TX})$ for H_{TX} = const

6.3.6 The useful signal power $P_{\Theta}(f_{TX},H_{TX})$

The useful signal power $P_{\Theta}(f_{TX},H_{TX})$ is defined as $P_{\Theta}(f_{TX},H_{TX}) = \Theta(f_{TX},H_{TX})^2$.

6.3.7 Noise power $P_{NOISE}(f_{TX},H_{TX})$

In order to derive the power, $P_{NOISE}(f_{TX},H_{TX})$, the spectral contents of $\Phi_{RESO,NORM}(t)$ (see Figure 12) shall be taken into account without the d.c. part, fundamental (odd and even) and its harmonics (set to 0). The remaining part shall be weighted over frequency. The weighting is performed by multiplying the resulting spectrum with the weighting function (see Figure 14). The resulting noise spectral content is shown in Figure 15.

© ISO 2009 – All rights reserved

Documents
Document Sharing Hub
Full document details: ISO_TS 22239-2_2009

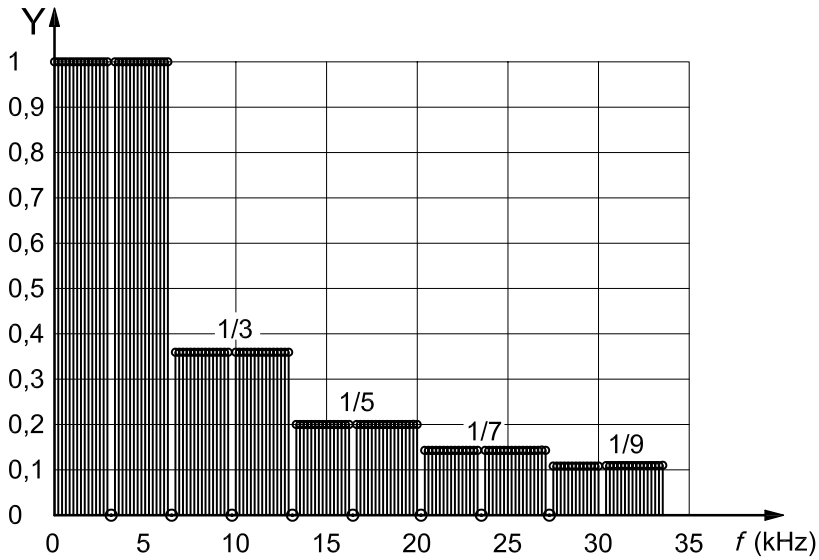

Key

Y weighting function

Figure 14 — Weighting function and resulting noise spectral contents of $\varphi_{RX}(t)$

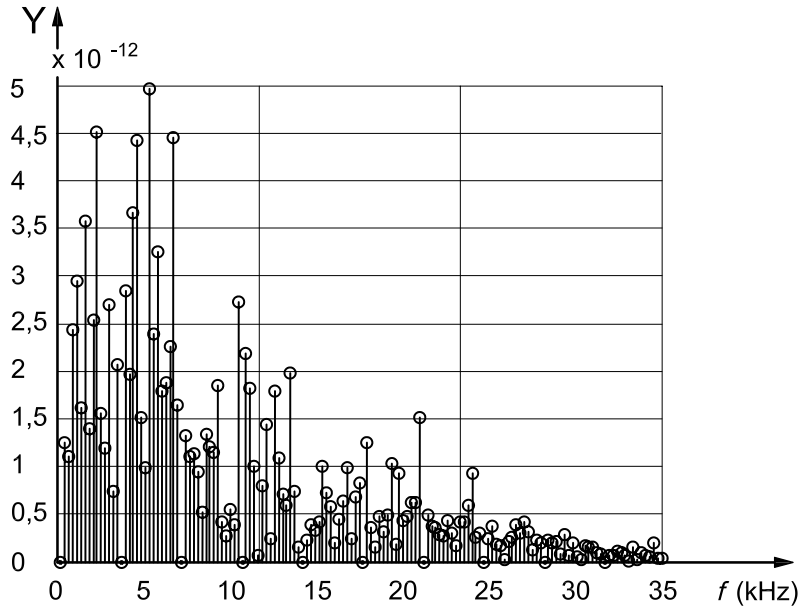

Key

Y noise amplitude (V)

Figure 15 — Resulting noise spectral contents of $\varphi_{NORM}(t)$

The noise power is defined as:

$$P_{NOISE}(f_{TX}, H_{TX}) = \int_f \text{noise_spectrum}^2 \quad (3)$$

The noise power depends on the frequency f_{TX} and the magnetic field strength H_{TX} supplying the resonator.

© ISO 2009 – All rights reserved

Documents
Document Sharing Hub
Full document details: ISO_TS 22239-2_2009

6.3.8 The signal-to-noise ratio (SNR)

In order to generate the signal-to-noise ratio (SNR), the useful signal's power as well as the noise power shall be calculated. The SNR is defined by Equation (4):

$$SNR(f_{TX}, H_{TX}) = \frac{P_{\Theta}(f_{TX}, H_{TX})}{P_{NOISE}(f_{TX}, H_{TX})} \tag{4}$$

In order to characterize the performance of the resonator, SNR shall be recorded over frequency and magnetic field strength.

6.3.9 Definition of $W(H_{TX})$

Due to the fact that there are only discrete frequency settings that the CPOD transmitter can use, the function $\Theta(f_{TX},H_{TX})$ (see 6.3.5) shall be evaluated within a frequency window whose centre frequency is variable and which has a defined width of Δf_{BAND} (see Figure 16). This is because the transmitting frequency may vary between CPOD sensors.

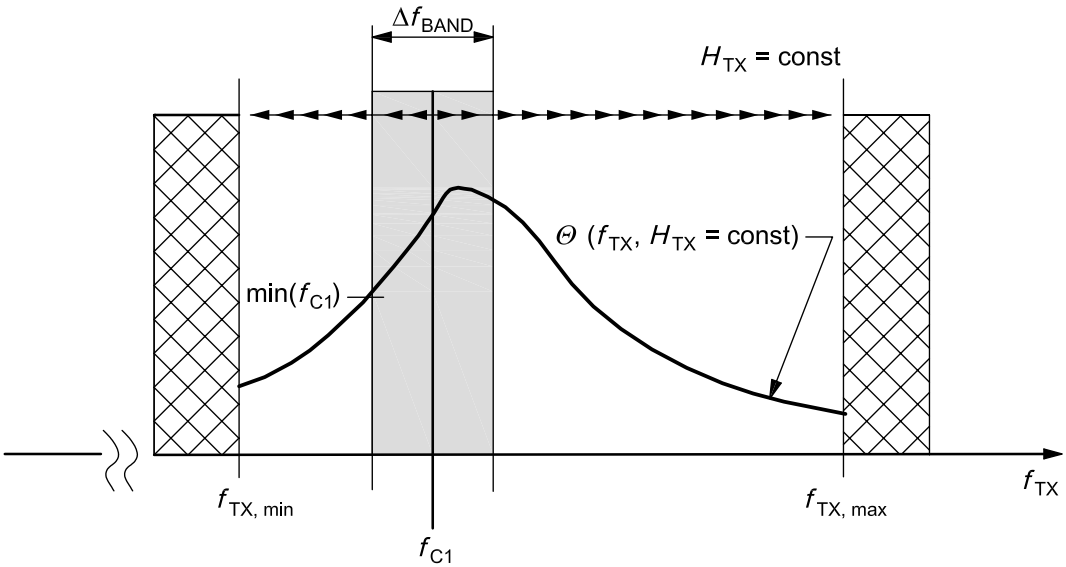

Figure 16 — Evaluation of $W(H_{TX})$ at a given transmitter field strength

$W(H_{TX})$ is defined as

$$W(H_{TX}) = \max\left(\min\left\{\Theta\left[f_{TX}\varepsilon\left(f_C - \Delta f_{BAND}/2 \ldots f_C + \Delta f_{BAND}/2\right), H_{TX}\right]\right\}\right) \tag{5}$$

with $f_C\varepsilon\left(f_{TX,min} \cdots f_{TX,max}\right)$.

When shifting the frequency window over $\Theta(f_{TX},H_{TX})$ with $f_C = f_{TX,min} \cdots f_{TX,max}$, the following shall be recorded:

$$W(H = H_{TX}) = \max\left(\min\left\{\Theta\left[f_C\varepsilon\left(f_C - \Delta f_{BAND}/2 \ldots f_C + \Delta f_{BAND}/2\right), H_{TX}\right]\right\}\right) \tag{6}$$

This shall be done for all $H_{TX}\varepsilon\left(H_{OP,min} \cdots H_{OP,max}\right)$.

© ISO 2009 – All rights reserved

Documents
Document Sharing Hub
Full document details: ISO_TS 22239-2_2009

6.3.10 Definition of $N(H_{TX})$

$N(H_{TX})$ specifies the minimum SNR in the f_{TX} frequency range where $\Theta(f_{TX},H_{TX}) \geqslant W(H_{TX})$ (see Figure 17 for explanation). In mathematical terms,

$$N(H_{TX}) = \min\left\{\mathrm{SNR}\left[f_{TX}\varepsilon(f_1 \ldots f_2), H_{TX}\right]\right\} \tag{7}$$

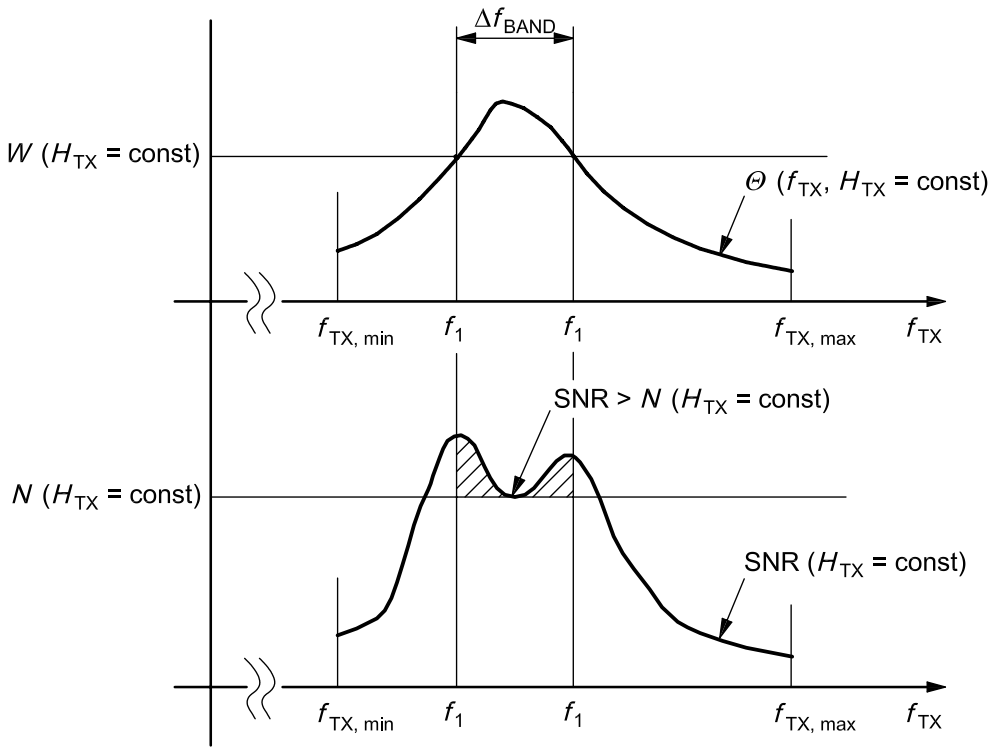

Figure 17 — Example for interpretation of $W(H_{TX})$

6.4 Modulation parameters

$W(H_{TX})$ and $N(H_{TX})$ shall meet the requirements specified in Table 6.

Table 6 — $W(H_{TX})$, $N(H_{TX})$ specification

Parameter	Definition	min.	max.
W_{synch} [a] Vspk	Δf_{BAND} = 2 185 kHz, measured in accordance with 6.3.9; measurement starts $T_{STARTUP}$ after reset field gap	as defined in Figure 18	—
N_{synch} [a] dB	Δf_{BAND} = 2 185 kHz, measured in accordance with 6.3.10; measurement starts $T_{STARTUP}$ after reset field gap	as defined in Figure 19	—
W_{asynch} [b] Vspk	Δf_{BAND} = 2 185 kHz, measured in accordance with 6.3.9; measurement starts after T_{DELAY}, no reset field gap generated	as defined in Figure 18	—
N_{asynch} [b] dB	Δf_{BAND} = 2 185 kHz, measured in accordance with 6.3.10; measurement starts after T_{DELAY}, no reset field gap generated	as defined in Figure 19	—

NOTE 1 pk = peak value.

NOTE 2 N[dB] = 10 * $\log_{10}[N(H_{TX})]$.

[a] Resonator protocol generation timing is **synch**ronized with reader timing, since resonator was reset before.

[b] Resonator protocol generation timing is **asynch**ronous with reader timing, since resonator was **not** reset before.

© ISO 2009 – All rights reserved

Documents
Document Sharing Hub
Full document details: ISO_TS 22239-2_2009

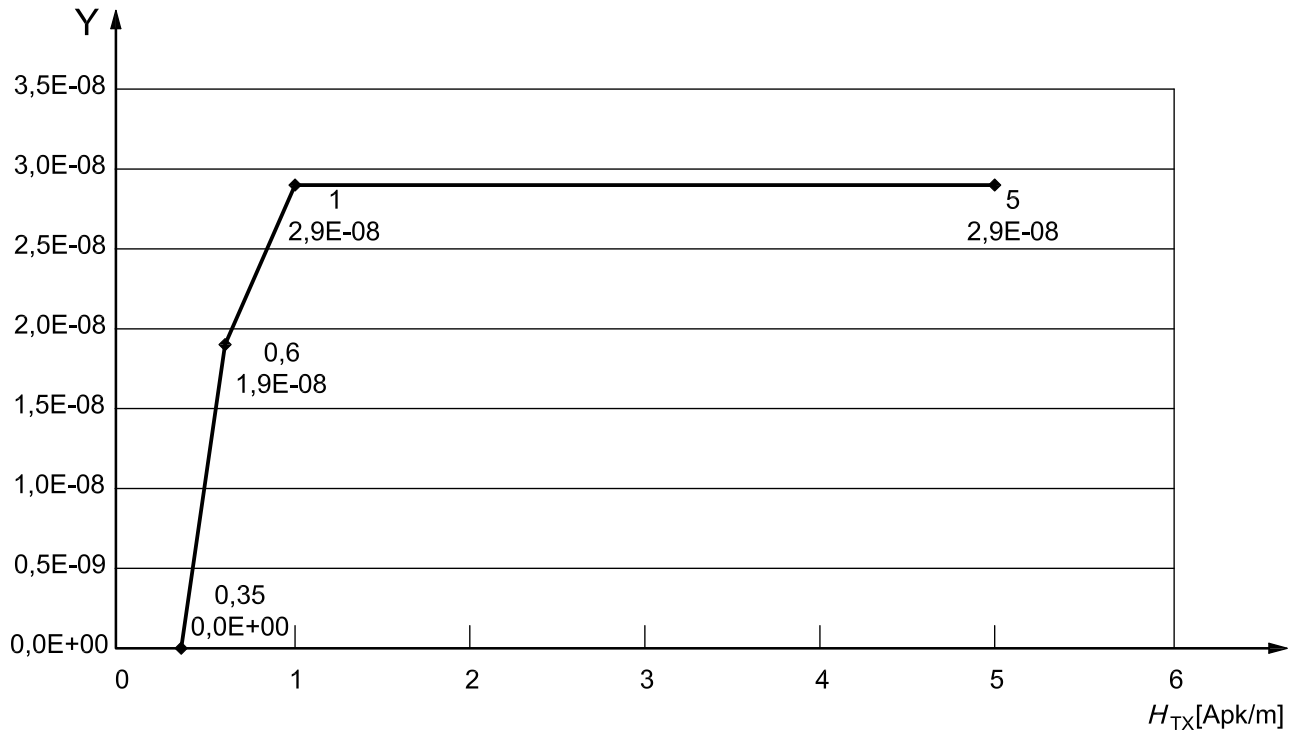

Key

Y $W_{synch,asynch}$ [Vspk]

Figure 18 — $W_{synch,asynch}$ versus magnetic field strength, H_{TX}

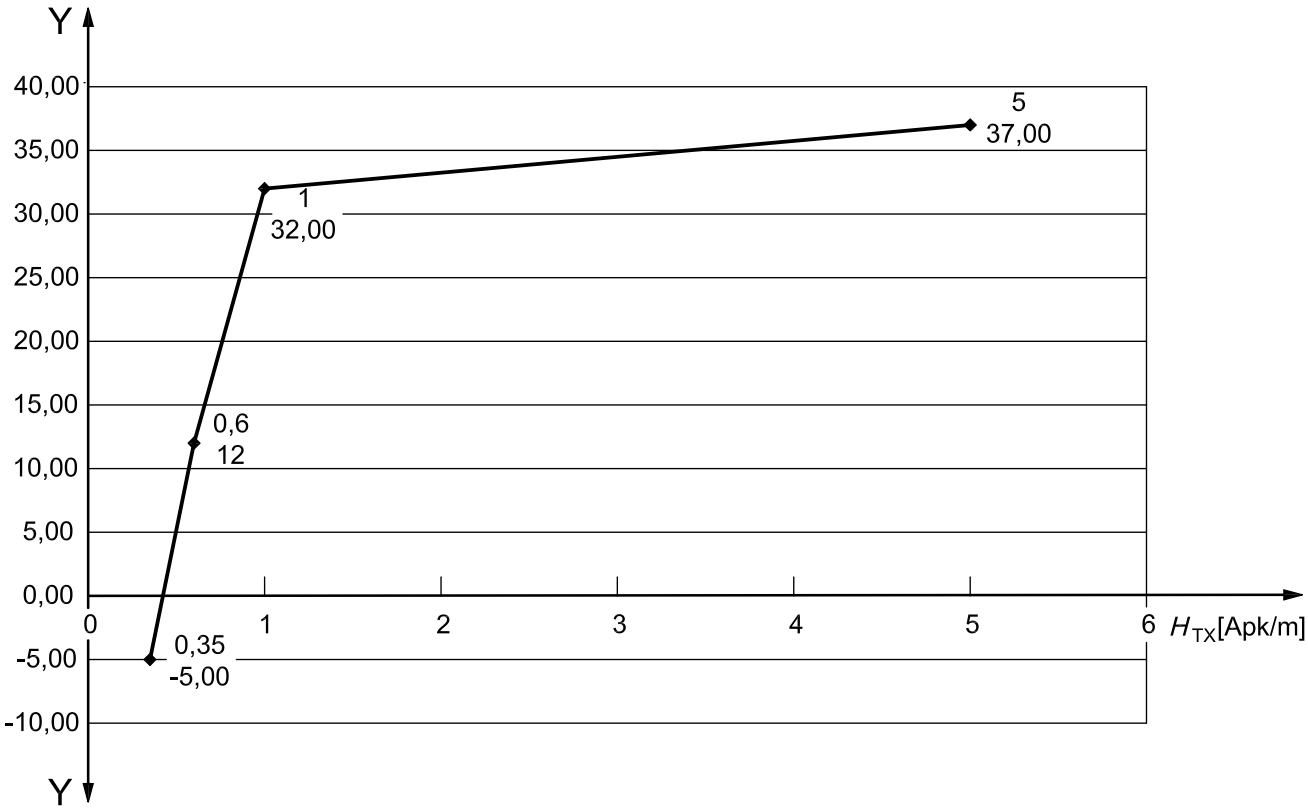

Key

Y $N_{synch,asynch}$ [dB]

Figure 19 — $N_{synch,asynch}$ versus magnetic field strength, H_{TX}

© ISO 2009 – All rights reserved

Documents
Document Sharing Hub
Full document details: ISO_TS 22239-2_2009