TECHNICAL SPECIFICATION

ISO/TS 4210-10

First edition
2020-07

Cycles — Safety requirements for bicycles —

Part 10: Safety requirements for electrically power assisted cycles (EPACs)

Reference number
ISO/TS 4210-10:2020(E)

Documents
Document Sharing Hub
© ISO 2020

Full document details: ISO_TS 4210-10_2020

COPYRIGHT PROTECTED DOCUMENT

© ISO 2020

All rights reserved. Unless otherwise specified, or required in the context of its implementation, no part of this publication may be reproduced or utilized otherwise in any form or by any means, electronic or mechanical, including photocopying, or posting on the internet or an intranet, without prior written permission. Permission can be requested from either ISO at the address below or ISO's member body in the country of the requester.

ISO copyright office
CP 401 • Ch. de Blandonnet 8
CH-1214 Vernier, Geneva
Phone: +41 22 749 01 11
Email: copyright@iso.org
Website: www.iso.org

Published in Switzerland

© ISO 2020 – All rights reserved

Documents
Document Sharing Hub

Full document details: ISO_TS 4210-10_2020

Contents

Page

Foreword ..... **v**
Introduction ..... **vi**
1 Scope **1**
2 Normative references **1**
3 Terms and definitions **2**
4 Abbreviated terms **5**
5 General requirements **6**
5.1 Lighting systems, reflectors and warning device 6
5.2 Risk assessment 7
5.3 Significant hazards and safety functions 7
5.3.1 Significant hazards 7
5.3.2 Safety function for control system of EPACs 7
5.4 Prevention of unauthorized use 8
5.5 Failure mode 8
5.5.1 Requirement 8
5.5.2 Test method 8
6 Electrical requirements **8**
6.1 Motor controller 8
6.2 Controls and symbols 8
6.3 Batteries 9
6.4 Battery charger 9
6.4.1 Requirements for proprietary system 9
6.4.2 Requirements for non-proprietary system 9
6.4.3 Solutions for non-proprietary systems 10
6.5 Electric cables and couplers 10
6.6 Wiring 10
6.7 Protection against ingress of water (IP code) 11
6.8 Environmental and operational conditions 11
6.9 Mechanical strength of the electrical components 11
6.9.1 General 11
6.9.2 Function related shock test 11
6.9.3 Impact related shock test 11
6.10 Performance measurement 12
6.10.1 General 12
6.10.2 System based on maximum continuous rated power 12
6.10.3 System based on maximum assisted rate 14
6.11 Walk assistance mode 20
6.11.1 Requirements 20
6.11.2 Test method for EPAC with walk assistance mode 20
6.12 Electromagnetic compatibility (EMC) 21
6.12.1 Requirement 21
6.13 Anti-tampering measure 21
6.13.1 General 21
6.13.2 Prevention of tampering of the motor 21
6.14 Thermal hazards 22
6.14.1 Non-continuous contact surface 22
6.14.2 Continuous contact surface 22
6.14.3 Ambient temperature 22
7 Mechanical requirements **22**
7.1 General 22
7.2 Brakes — Heat-resistance test 22
7.3 Handlebar and stem assembly — Lateral bending test 23

Documents
Document Sharing Hub

© ISO 2020 – All rights reserved

Full document details: ISO_TS 4210-10_2020

7.4 Handlebar stem — Forward bending test 23
7.5 Handlebar to handlebar stem — Torsional security test 23
7.6 Handlebar and stem assembly — Fatigue test 23
7.7 Frame — Impact test (falling mass) 23
7.8 Frame and front fork assembly — Impact test (falling frame) 24
7.9 Frame — Fatigue test with horizontal forces 24
7.10 Frame — Fatigue test with a vertical force 24
7.11 Front fork — Static bending test 25
7.12 Front fork — Rearward impact test 25
7.13 Front fork — Bending fatigue test plus rearward impact test 25
7.14 Seat-post — Fatigue test 25

8 Manufacturer's instructions 26

9 Marking 26

Annex A (normative) **Electromagnetic compatibility of EPACs 28**

Annex B (informative) **Electromagnetic compatibility of ESAs 35**

Annex C (normative) **The battery chargers for non-proprietary system 44**

Annex D (normative) **Light, audible warning device, On/Off symbols 118**

Annex E (informative) **Environmental and operational conditions 119**

Annex F (normative) **Battery 120**

Bibliography 125

© ISO 2020 – All rights reserved

Documents
Document Sharing Hub
Full document details: ISO_TS 4210-10_2020

Foreword

ISO (the International Organization for Standardization) is a worldwide federation of national standards bodies (ISO member bodies). The work of preparing International Standards is normally carried out through ISO technical committees. Each member body interested in a subject for which a technical committee has been established has the right to be represented on that committee. International organizations, governmental and non-governmental, in liaison with ISO, also take part in the work. ISO collaborates closely with the International Electrotechnical Commission (IEC) on all matters of electrotechnical standardization.

The procedures used to develop this document and those intended for its further maintenance are described in the ISO/IEC Directives, Part 1. In particular, the different approval criteria needed for the different types of ISO documents should be noted. This document was drafted in accordance with the editorial rules of the ISO/IEC Directives, Part 2 (see www.iso.org/directives).

Attention is drawn to the possibility that some of the elements of this document may be the subject of patent rights. ISO shall not be held responsible for identifying any or all such patent rights. Details of any patent rights identified during the development of the document will be in the Introduction and/or on the ISO list of patent declarations received (see www.iso.org/patents).

Any trade name used in this document is information given for the convenience of users and does not constitute an endorsement.

For an explanation of the voluntary nature of standards, the meaning of ISO specific terms and expressions related to conformity assessment, as well as information about ISO's adherence to the World Trade Organization (WTO) principles in the Technical Barriers to Trade (TBT), see www.iso.org/iso/foreword.html.

This document was prepared by Technical Committee ISO/TC 149, *Cycles*, Subcommittee SC 1, *Cycles and major sub-assemblies*.

A list of all parts in the ISO 4210 series can be found on the ISO website.

Any feedback or questions on this document should be directed to the user's national standards body. A complete listing of these bodies can be found at www.iso.org/members.html.

© ISO 2020 – All rights reserved

Documents
Document Sharing Hub
Full document details: ISO_TS 4210-10_2020

Introduction

This document combines several countries' safety requirements for Electrically Power Assisted Cycles (EPACs). The commercialization of EPACs has accelerated in the global market, in response to global concerns about CO_2 reduction and energy saving. EPAC technologies for performance, electrical control, battery management and battery charging are currently developing rapidly in a competitive market. It is therefore necessary to standardize the safety of these technologies for EPACs.

This documentation will allow an easy and clear understanding of requirements for different types of EPAC.

This document includes safety requirements for the charging of EPACs. This includes off-board parts and EPAC battery chargers.

This document does not state the limit for the maximum permissible load of the EPAC. The manufacturer is advised to consider amongst other factors the maximum permissible load (luggage plus rider) as well as the intended use of the EPAC. Both have an influence on the mechanical requirements.

© ISO 2020 – All rights reserved
Documents
Document Sharing Hub
Full document details: ISO_TS 4210-10_2020

Cycles — Safety requirements for bicycles —

Part 10: Safety requirements for electrically power assisted cycles (EPACs)

1 Scope

This document specifies safety and performance requirements for the design, marking, assembly, and testing of two wheeled electrically power assisted cycles (hereafter EPACs), fully-assembled EPACs and subassemblies, and provides guidelines for information supplied by the manufacturers (i.e. instructions on the use and care of such EPACs).

This document applies to two wheeled EPACs that have a maximum saddle height of 635 mm or more and are intended for private and commercial use with exception of EPACs intended for hire from unattended stations.

This document is intended to cover all common significant hazards, hazardous situations and events listed in 5.3 of EPACs, when used as intended or under conditions of misuse that are reasonably foreseeable by the manufacturer.

This document specifies requirements and test methods for engine power management systems, electrical circuits including the charger for the assessment of the design and assembly of EPACs and sub-assemblies for systems having a Safety Extra Low Voltage (SELV) maximum voltage up to 60 V d.c. including tolerances.

2 Normative references

The following documents are referred to in the text in such a way that some or all of their content constitutes requirements of this document. For dated references, only the edition cited applies. For undated references, the latest edition of the referenced document (including any amendments) applies.

ISO 2409, *Paints and varnishes — Cross-cut test*

ISO 4210-1, *Cycles — Safety requirements for bicycles — Part 1: Terms and definitions*

ISO 4210-2:2015, *Cycles — Safety requirements for bicycles — Part 2: Requirements for city and trekking, young adult, mountain and racing bicycles*

ISO 4210-4:2014, *Cycles — Safety requirements for bicycles — Part 4: Braking test methods*

ISO 4210-5:2014, *Cycles — Safety requirements for bicycles — Part 5: Steering test methods*

ISO 4210-6:2015, *Cycles — Safety requirements for bicycles — Part 6: Frame and fork test methods*

ISO 4210-9:2014, *Cycles — Safety requirements for bicycles — Part 9: Saddle and seat-post test methods*

ISO 7010:2011, *Graphical symbols — Safety colours and safety signs — Registered safety signs*

ISO 11451-1, *Road vehicles — Vehicle test methods for electrical disturbances from narrowband radiated electromagnetic energy — Part 1: General principles and terminology*

ISO 11451-2, *Road vehicles — Vehicle test methods for electrical disturbances from narrowband radiated electromagnetic energy — Part 2: Off-vehicle radiation sources*

© ISO 2020 – All rights reserved

Documents
Document Sharing Hub
Full document details: ISO_TS 4210-10_2020

ISO 11452-1, *Road vehicles — Component test methods for electrical disturbances from narrowband radiated electromagnetic energy — Part 1: General principles and terminology*

ISO 11452-2, *Road vehicles — Component test methods for electrical disturbances from narrowband radiated electromagnetic energy — Part 2: Absorber-lined shielded enclosure*

ISO 11452-4:2011, *Road vehicles — Component test methods for electrical disturbances from narrowband radiated electromagnetic energy — Part 4: Harness excitation methods*

ISO 11898-1, *Road vehicles — Controller area network (CAN) —Part 1: Data link layer and physical signalling*

ISO 11898-2, *Road vehicles — Controller area network (CAN) —Part 2: High-speed medium access unit*

ISO 12100, *Safety of machinery — General principles for design — Risk assessment and risk reduction*

ISO 13849-1, *Safety of machinery — Safety-related parts of control systems — Part 1: General principles for design*

ISO 13849-2, *Safety of machinery — Safety-related parts of control systems — Part 2: Validation*

IEC 60034-1, *Rotating electrical machines — Part 1: Rating and performance*

IEC 60068-2-27, *Environmental testing — Part 2-27: Tests — Test Ea and guidance: Shock*

IEC 60335-2-29, *Household and similar electrical appliances — Safety — Part 2-29: Particular requirements for battery chargers*

IEC 60529, *Degrees of protection provided by enclosures (IP Code)*

IEC 62133-1:2017, *Secondary cells and batteries containing alkaline or other non-acid electrolytes — Safety requirements for portable sealed secondary cells, and for batteries made from them, for use in portable applications — Part 1: Nickel systems*

IEC 62133-2:2017, *Secondary cells and batteries containing alkaline or other non-acid electrolytes — Safety requirements for portable sealed secondary lithium cells, and for batteries made from them, for use in portable applications — Part 2: Lithium systems*

CISPR 12:2007 + A1:2009, *Vehicles, boats and internal combustion engines — Radio disturbance characteristics — Limits and methods of measurement for the protection of off-board receivers*

CISPR 16-1-1:2015, *Specification for radio disturbance and immunity measuring apparatus and methods — Part 1-1: Radio disturbance and immunity measuring apparatus — Measuring apparatus*

CISPR 25:2016, *Vehicles, boats and internal combustion engines — Radio disturbance characteristics — Limits and methods of measurement for the protection of on-board receivers*

EN 50604-1:2016, *Secondary lithium batteries for light EV (electric vehicle) applications — Part 1: General safety requirements and test methods*

3 Terms and definitions

For the purposes of this document, the terms and definitions given in ISO 4210-1 and the following apply.

ISO and IEC maintain terminological databases for use in standardization at the following addresses:

— ISO Online browsing platform: available at https://www.iso.org/obp

— IEC Electropedia: available at http://www.electropedia.org/

© ISO 2020 – All rights reserved
Documents
Document Sharing Hub
Full document details: ISO_TS 4210-10_2020

3.1
cycle
any vehicle which has at least two wheels and is propelled by the muscular energy of the person on that vehicle, in particular by means of pedalling or the possibility of adding assistance provided by electric motor when pedalling

Note 1 to entry: Pedalling also refers to use of hand cranks or other similar devices.

3.2
electrically power assisted cycle
EPAC
cycle (3.1), equipped with pedals and an auxiliary electric motor, which cannot be propelled exclusively by means of this auxiliary electric motor, except in the walk assistance mode

3.3
mountain EPAC
electrically power assisted cycle (3.2) designed for use off-road on rough terrain, on public roads, and on public pathways, equipped with a suitably strengthened frame and other components, and, typically, with wide-section tyres with coarse tread patterns and a wide range of transmission gears

[SOURCE: ISO 4210-1:2014, 2.30, modified — bicycle has been changed to electrically power assisted cycle.]

3.4
braking device cut-off switch
device that cuts off the motor assistance while braking

3.5
continuous rated power
output power specified by manufacturer, at which the motor reaches its thermal equilibrium at given ambient conditions

3.6
assisted rate
ratio of between mechanical motor output-power and muscular human input-power

3.7
thermal equilibrium
temperatures of motor parts which do not vary more than 2 °C/h

3.8
assistance cut-off speed
speed at which the motor controller cuts off the assistance of the auxiliary electric motor

3.9
walk assistance mode
function by which the user can activate the auxiliary electric motor to propel the EPAC up to a defined maximum speed without pedalling

3.10
electromagnetic compatibility
ability of an EPAC or one of its electrical/electronic systems to function satisfactorily in its electromagnetic environment without introducing intolerable electromagnetic disturbance to anything in that environment

[SOURCE: IEC 60050-161:1990/AMD8:2018, IEV ref. 161-01-07, modified — an EPAC or one of its electrical/electronic systems have been specified.]

© ISO 2020 – All rights reserved

Documents
Document Sharing Hub
Full document details: ISO_TS 4210-10_2020

3.11
ESA
electronic subassembly
electrical subassembly
electronic and/or electrical component, or an assembly of components provided for installation into an EPAC, together with all electrical connections and associated wiring for the execution of several specific functions

3.12
motor controller
device or group of devices that serves to govern in some predetermined manner the performance of an electric motor

Note 1 to entry: Means for manual or automatic ON/OFF, selecting the drive direction, regulating the speed, limiting the torque and providing protection against faults.

3.13
fault condition
condition in which one or more fault is present which could cause hazard

3.14
charging configuration
sets of physical parameters which are predefined to control a charging process

3.15
battery management system
BMS
local energy management system for the battery system, protecting the battery system from damage, monitoring and increasing the lifetime, and maintaining the functional state

Note 1 to entry: BMS and BCU (according to ISO 12405) do not have the same functions.

3.16
narrow-band emission
emission which has a bandwidth less than that of a specific receiver or measuring instrument

3.17
no load current point
current measured at battery output with no change to the operating status of any auxiliary systems during the test

3.18
safety extra-low voltage
SELV
voltage not exceeding ripple-free 60 V d.c. between conductors and earth, the no load voltage not exceeding ripple-free 60 V d.c.

3.19
anti-tampering measures
technical requirements and specifications which prevent, as far as possible, unauthorized modifications of the EPAC's drive system which may prejudice functional safety

3.20
maximum permissible load
maximum permissible weight of rider and luggage as defined by the manufacturer

3.21
proprietary system
manufacturer-specific system

© ISO 2020 – All rights reserved
Documents
Document Sharing Hub
Full document details: ISO_TS 4210-10_2020

3.22
non-proprietary system
non manufacturer-specific system

3.23
charger inlet
inlet on the EPAC or battery side for charging

[SOURCE: IEC 60050-714:1990, IEV ref. 714-03-04, this source is only for “inlet”]

3.24
charger connector
connector on charger side for charging

[SOURCE: IEC 60050-151:2001, IEV ref. 151-12-19, this source is only for “connector”]

3.25
rigid seat-post
seat-post that cannot be raised or lowered independently of the seat tube clamp, while riding, and does not provide controlled axial flexibility to reduce the transmission of road shocks to the rider.

3.26
suspension seat-post
seat-post incorporating controlled, axial flexibility to reduce the transmission of road shocks to the rider

3.27
dropper seat-post
seat-post that can be raised or lowered independently of the seat tube clamp while riding

3.28
suspension dropper seat-post
seat-post incorporating controlled, axial flexibility to reduce the transmission of road shocks to the rider and incorporating the capability of raising and lowering independently of the seat tube clamp while riding

4 Abbreviated terms

See Table 1.

Table 1 — Abbreviated terms

Abbreviation	Description	Definition or occurrence
AC	Alternating current	C.3.1.1
ACK	Acknowledge	C.2.5.3.1
ALSE	Absorber-lined shielded enclosure	B.3.4
AM	Amplitude modulation	A.4.6.1
BCI	Bulk current injection	B.2.6.3
BCU	Battery control unit	3.15
BMS	Battery management system	3.15
BPSK	Biphase shift keying	C.2.5.4.1
CAN	Controller area network	C.3.1.1
CC	Constant current mode	Table C.10
CCF	Common cause failure	F.2.4.1.2
CDB	Command descriptor block	C.2.6.3.1
CSMA/CR	Carrier sense multiple access with collision resolution	C.3.1.2

© ISO 2020 – All rights reserved

AVA Documents Document Sharing Hub
Full document details: ISO_TS 4210-10_2020

Table 1 *(continued)*

Abbreviation	Description	Definition or occurrence
CV	Constant voltage mode	Table C.10
DA	Destination address	Figure C.10
DC	Direct current	C.2.1.1
DFMEA	Design failure mode and effect analysis	5.2
DLC	Data length code	C.3.6.2.1
DUT	Device under test	F.2.3.4.2
EMC	Electromagnetic compatibility	6.12
EPAC	Electrically power assisted cycle	Introduction
ESA	Electronic/electrical subassembly	3.11
FCS	Frame check sequence	Table C.9
FMEA	Failure mode and effect analysis	5.2
FTA	Fault tree analysis	5.2
HMI	Human machine interface	Figure C.20
MPU	Micro processing unit	Figure C.1
NDN	Network device number	Table C.10
NM	Network management	C.3.6.2.4
NRZ	Non-return-to-zero	C.2.5.4.2
PC	Page control	Table C.40
PL	Performance level	5.3.2.2.2
PLC	Power line communication	Figure C.1
PM	Pulse modulation	A.4.6.1
PnP	Plug and play	C.2.6.2
PS	Parameter saveable	C.2.6.5.12
RA	Risk assessment	5.2
RF	Radio frequency	B.3.3
R-map	Risk-map	5.2
rms	Root mean square	A.2.6.3
RT	Room temperature	F.2.4.1.3
SA	Source address	Figure C.12
SELV	Safety extra low voltage	Clause 1
SOPC	Sub operation code	Table C.33
SP	Save pages	C.2.6.5.12
TLS	Transmission-line-system	A.4.6.3
ToR	Type of request	C.2.6.5.7.2
VDD	Voltage drain	Figure C.1

5 General requirements

5.1 Lighting systems, reflectors and warning device

EPACs shall be in accordance with the requirements of ISO 4210-2:2015, 4.20 and 4.21.

© ISO 2020 – All rights reserved
Documents
Document Sharing Hub
Full document details: ISO_TS 4210-10_2020

5.2 Risk assessment

EPAC shall be designed using principles of Risk Assessment (RA) in accordance with ISO 12100.

The following RA methodology may be used, but is not limited to:

— fault tree analysis (FTA);

— failure mode and effect analysis (FMEA);

— design failure mode and effect analysis (DFMEA);

— risk-map (R-map).

EPAC shall be designed in accordance with the principles of ISO 12100 for relevant hazards which are not dealt with by this document. This includes evaluation of such risks for all relevant components.

5.3 Significant hazards and safety functions

5.3.1 Significant hazards

The following significant hazards of EPACs have been considered in this document:

a) mechanical hazards: deceleration, acceleration, instability, kinetic energy, rotating elements and moving elements, rough or slippery surfaces, sharp edges;

b) electrical hazards: electromagnetic phenomena, electrostatic phenomena, overload, short-circuit, thermal radiation;

c) thermal hazards: explosion, flame, radiation from heat sources, objects or materials with a high or low temperature;

d) ergonomic hazards: effort, local lighting, posture;

e) hazards associated with the environment in which the EPAC is used: water (dust).

5.3.2 Safety function for control system of EPACs

5.3.2.1 General

The EPAC control system risk shall be assessed in accordance with the series of ISO 13849.

The following methodology may be used, but is not limited to:

— IEC 61508 (all parts);

— R-map.

5.3.2.2 Requirements

5.3.2.2.1 Safety related parts of the mechanical, hydraulic control systems

The necessary performance levels and requirements which are related to the identified hazards are covered by Clause 7.

5.3.2.2.2 Safety related parts of the electrical control systems

The safety requirements of Table 2 shall be necessary for an EPAC. If necessary, the manufacturer shall add more safety requirements and determine the necessary PL or safety level for each of these safety requirements and the related safety functions.

© ISO 2020 – All rights reserved

Documents
Document Sharing Hub
Full document details: ISO_TS 4210-10_2020

Table 2 — Safety functions related to defined hazards

Safety function	Performance Level
Prevention of electric motor assistance functions without pedalling, and without activation of the walk assistance mode	PLr c
Prevention of risk of fire in case of management system failure for batteries with electric energy above 100 Wh	PLr c

5.3.2.3 Verification of the safety functions

The whole procedure for achieving functional safety shall be in accordance with the series of ISO 13849.

System suppliers shall document this process and take measures to achieve the required performance level (see Table 2).

The minimum set of safety related functions shall be implemented at least by both system suppliers and the manufacturer to achieve conformity with this document.

5.4 Prevention of unauthorized use

Means shall be provided to the user to prevent an unauthorized use of the electric assistance/walk assistance mode of the EPAC e.g. key, locks, electronic control device.

5.5 Failure mode

5.5.1 Requirement

It shall be possible to ride the EPAC by pedalling even if the assistance failed. This requirement shall be checked as described in 5.5.2.

5.5.2 Test method

a) Remove or disconnect the battery pack.

b) Ride the EPAC up to 10 km/h.

6 Electrical requirements

6.1 Motor controller

The motor controller shall be designed so that it switches off the power to the electric motor if a fault condition occurs.

Subsequent switch on shall only be possible after user interaction.

6.2 Controls and symbols

A control device shall be fitted to switch on and off the assistance.

The control device shall be apparent, easy to reach and unmistakable. This control device shall be activated by voluntary action.

Designs of the On/Off symbol, lighting symbol and audible warning device symbol shall be in accordance with Annex D.

© ISO 2020 – All rights reserved
Documents
Document Sharing Hub
Full document details: ISO_TS 4210-10_2020

6.3 Batteries

The EPAC and batteries shall be designed in accordance with Annex F to avoid risk of fire and mechanical deterioration resulting from abnormal use.

In case the EPAC batteries may be subjected to country-specific regulations, batteries should conform to the country-specific regulations.

Batteries and the charger unit shall be labelled or be uniquely designed in order to ensure their compatibility and prevent incorrect plugging.

6.4 Battery charger

6.4.1 Requirements for proprietary system

A proprietary system consists of batteries and chargers, that are not interoperable. By design intended only to operate in combination with each other. A proprietary plug system shall assure that the EPAC batteries are only to be charged with the dedicated charger. The specific combination of charger and battery shall be considered for the hazard and risk analysis, as well as in the implementation of the safety functions.

The battery charger for proprietary system shall be in accordance with the requirements of IEC 60335-2-29.

6.4.2 Requirements for non-proprietary system

6.4.2.1 General

For non-proprietary systems, interoperable charging may be possible. The safety and risk analysis shall consider charging processes where battery and charger are released independently from each other. Therefore the safety requirements for the charging process on the EPAC side and on the charger side shall be described. To guarantee a safe charging process of the EPAC for a non-proprietary system, safety requirements shall be taken into consideration to prevent:

a) overvoltage and overcurrent;

b) over temperature;

c) hot disconnect;

d) short circuit.

For the charging configuration it is important, that the roles between the EPAC and the charger are uniquely defined. The EPAC shall be the master and the charger shall be the slave. This means that the EPAC controls the charging current and charging voltage at any time.

It shall only be possible to charge the EPAC, after a communication between the EPAC and the charger has been established. If this communication is interrupted, the charging process shall be stopped and the power lines shall become zero potential immediately.

The interface between EPAC and charger consists of a standardized plug system and a communication protocol.

6.4.2.2 Protocol requirements

The following protocol requirements shall be satisfied:

a) heart beat: for bilateral continuous presence detection of the EPAC and the charger. The EPAC shall transmit a heartbeat signal to the charger every 10 ms and the charger shall transmit a heartbeat signal to the EPAC every 200 ms;

© ISO 2020 – All rights reserved

Documents
Document Sharing Hub
Full document details: ISO_TS 4210-10_2020

b) property exchange: to exchange property information between EPAC and charger;

c) charging configuration to adjust charger to the required voltage and current of the EPAC;

d) strategy to avoid overvoltage and overcurrent;

e) strategy to avoid charging at over temperature and under temperature;

f) diagnostic functions to avoid charging after occurrence of safety-critical malfunctions.

The communication between EPAC and charger, necessary for the charging process, shall be separated from the EPAC internal communication.

6.4.2.3 Mechanical requirements

The following mechanical requirements shall be satisfied:

a) the charger connector cannot be disconnected from the charger inlet during power transfer (shall have latch function and/or have enough time to stop the supplying power after detecting its removal during the charging.);

b) A manufacturer device may be fitted to an EPAC to allow the charging of a proprietary battery system using a non-proprietary charger.

The charger shall provide the requested energy with an accuracy of 0/–2 %.

6.4.3 Solutions for non-proprietary systems

Solution approaches concerning battery chargers for non-proprietary systems including the described requirements are described in Annex C.

Manufacturers and/or service providers of non-proprietary system shall select System A or System B in Annex C.

6.5 Electric cables and couplers

Electric cables and coupler shall be selected in consideration of designed maximum current, maximum temperature and environmental conditions. Conformity is tested by inspection.

6.6 Wiring

Requirements on wiring shall be checked in accordance with the following sequence at an ambient room temperature (20 ± 5) °C.

a) Wire ways shall be smooth and free from sharp edges.

b) Wires shall be protected so that they do not come into contact with burrs, cooling fins or similar sharp edges that may cause damage to their insulation. Holes in metal through which are insulated wires pass shall have smooth well-rounded surfaces or be provided with bushings.

c) Wiring shall be effectively prevented from coming into contact with moving parts.

Conformity with a), b), c) shall be checked by inspection.

d) Separate parts of the EPAC that can move in normal use or during user maintenance relative to each other, shall not cause undue stress to electrical connectors and internal conductors, including those providing ground continuity.

Conformity with d) shall be checked by inspection and by the following test method.

© ISO 2020 – All rights reserved
Documents
Document Sharing Hub
Full document details: ISO_TS 4210-10_2020

If flexing occurs in normal use, the appliance is placed in its normal operational position and is supplied at rated voltage under normal operation.

The movable part is moved backwards and forwards, so that the conductor shall be flexed through the largest angle permitted by its construction.

For conductors that are flexed in normal use, flex movable part for 10 000 cycles at a test frequency of 0,5 Hz.

For conductors that are flexed during user maintenance, flex the movable part for 100 cycles at the same frequency.

If an open coil spring is used to protect wire, it shall be correctly installed and insulated. Flexible metallic tubes shall not cause damage to the insulation of the conductors contained within them.

6.7 Protection against ingress of water (IP code)

The electrical components of a fully assembled Mountain EPAC shall be tested and shall be in accordance with at least IPX5 requirements of IEC 60529. The electrical components of a fully assembled EPAC of the other bicycle types shall be tested and shall be in accordance with at least IPX4 requirements of IEC 60529.

NOTE Battery charger is not included in the electrical components of a fully assembled EPAC.

These requirements should be checked for each rational component or unit of EPAC (e.g. the handle assembly including the control switch, display, lamp and other electrical components, the drive unit, the battery unit, etc.).

If any water has entered, it shall not be sufficient to interfere with the correct operation of the equipment or impair safety.

6.8 Environmental and operational conditions

See Annex E.

6.9 Mechanical strength of the electrical components

6.9.1 General

The electrical components shall have adequate mechanical strength and be constructed to withstand such rough handling that may be expected in normal use.

NOTE 1 Both complete EPAC and sub assembly conditions are acceptable.

NOTE 2 For environmental test, see Reference [15].

6.9.2 Function related shock test

In accordance with IEC 60068-2-27, half sine shocks shall be applied with a peak acceleration of 150 m/s^2 and a duration equal to the nominal impulse of 6 ms in both directions of each of the three perpendicular axes. Number of shocks in each direction: 100 ± 3 shocks (a total of 600 shocks). After the test, the performance of the components shall be fully maintained and no failure shall occur.

6.9.3 Impact related shock test

The impact related shock test shall be carried out on a fully assembled EPAC.

Lateral overturning: The EPAC shall be left to fall 25 times both to the left and to the right from its upright position. For this purpose, the steering shall be aligned in the straightforward position, and

© ISO 2020 – All rights reserved

Documents
Document Sharing Hub
Full document details: ISO_TS 4210-10_2020

crank shall be aligned horizontally prior to each fall. The test shall be carried out on a hard surface (concrete or sett).

NOTE 25 times to the left and 25 times to the right, total 50 times.

After the test, electrical components shall not have any detachment any tearing out or any breaking of fastening elements; Detachable electrical components shall not have any functional impairment (e.g. inserting and removing the battery).

6.10 Performance measurement

6.10.1 General

Electrically power assisted system for EPAC has 2 types. One is the system based on the maximum continuous rated power, another is the system based on the maximum assisted rate. Each measurement is dependent on the requirement(s) from local regulation(s).

6.10.2 System based on maximum continuous rated power

6.10.2.1 Maximum speed for which the electric motor gives assistance

6.10.2.1.1 Requirements

The electrical motor assistance shall stop at velocity required from local regulation or lower values, limited by design. The maximum speed of the EPAC for which the electric motor gives assistance shall not differ by more than +10 % from the maximum assistance speed indicated in the marking required by Clause 9.

6.10.2.1.2 Test method

6.10.2.1.2.1 Test conditions

a) The test shall be performed either on a test track (See 6.10.2.2.2.2), a test bench or on a stand that keeps the motor driven wheel free off the ground.

b) The speed-measuring device used for the test shall have the following characteristics:

   1) Accuracy: ±2 %;

   2) Resolution: 0,1 km/h.

c) The ambient temperature shall be between 5 °C and 35 °C.

d) Maximum wind speed: 3 m/s.

e) The battery shall be fully charged in accordance with the manufacturer instructions.

6.10.2.1.2.2 Test procedure

The assistance cut-off speed can be measured by measuring either the motor torque output or the motor current. Other appropriate method the pertinence of which has been demonstrated can be used.

The following example describes the assistance cut-off speed test.

a) Pre-condition the EPAC by running it for 5 min at 80 % of the maximum assistance speed as declared by the manufacturer.

b) Record continuously the current and note the speed at which the current drops to a value equal to or less than “no load current point” (see definition 3.17).

© ISO 2020 – All rights reserved
Documents
Document Sharing Hub
Full document details: ISO_TS 4210-10_2020

c) While pedalling, ride steadily to reach a speed equal to 1,25 times (if possible by design) the maximum assistance speed as declared by the manufacturer.

d) Verify that the noted value in b) is the no load current point.

6.10.2.2 Power management

6.10.2.2.1 Requirements

a) When tested by the method described in 6.10.2.2.2 the recordings shall show that assistance shall be provided only when the rider pedals forward. This requirement shall be checked in accordance with the test methods described in 6.10.2.2.2.3;

b) Assistance shall be assistance cut-off when the rider stops pedalling forward and the assistance cut-off distance shall not exceed 2 m;

c) If all braking devices (e.g. levers, back pedal) are equipped with assistance cut-off switches (braking device cut-off switch, see 3.4), the assistance cut-off distance shall not exceed 5 m;

d) The power output or assistance shall be progressively reduced and finally assistance cut-off as the EPAC reaches the maximum assistance speed as designed. This requirement shall be checked in accordance with the test methods described in 6.10.2.2.2;

e) The assistance shall be progressively and smoothly managed (e.g. no hunting);

f) Two independent applying actions shall be required to start the electrical assistance mode (e.g. power switch and forward pedalling activation);

NOTE A traffic caused stop (e.g. traffic lights) is not subject to this requirement.

g) After a deactivation of the electrical assistance mode due to any hazardous electric drive malfunction, the electric drive shall not start automatically without rider intervention (pedalling is not considered as rider intervention).

6.10.2.2.2 Test method

6.10.2.2.2.1 Test conditions

a) The test may be performed either on a test track, a test bench or on a stand which keeps the motor driven wheel free of the ground;

b) The test track shall be in accordance with 6.10.2.2.2.2;

c) The time-measuring device shall have an accuracy of ±2 %;

d) The ambient temperature shall be between 5 °C and 35 °C;

e) Maximum wind speed over ground shall not exceed 3 m/s;

f) The battery shall be fully charged in accordance with the manufacturer's instructions;

g) Speed measurement shall have an accuracy of ±2 %.

The test to ensure the conformity to this clause shall be adapted to the technology used;

for example:

— pedal backwards and check the no load current point (see 3.17)

or

— pedal backwards and check that no torque is delivered on the driving wheel.

Documents
Document Sharing Hub

© ISO 2020 – All rights reserved

Full document details: ISO_TS 4210-10_2020

For the test, the worst case conditions of gear ratio and speed shall be applied. The worst condition for speed is defined as 90 % of assistance cut-off speed (see 3.8).

6.10.2.2.2.2 Test track

The gradient of the track shall not exceed 0,5 %. If the gradient is less than 0,2 % carry out all runs in the same direction. If the gradient lies between 0,2 % and 0,5 % carry out alternate runs in opposite directions.

The surface shall be hard concrete or fine asphalt free from loose dirt or gravel. The minimum coefficient of friction between the dry surface and the EPAC tyre shall be 0,75.

6.10.2.2.2.3 Test procedure

a) Pedal backwards and check that no electric motor assistance is provided. The test to ensure the conformity to this clause shall be adapted to the technology used.

b) Check the assistance cut-off distance:

   1) pedal so that the EPAC reach 90 % of the assistance cut-off speed;

   2) stop pedalling without braking;

   3) measure the assistance cut-off distance;

   4) carry out the test 3 times; the result is the average of this measurement after rejection of invalid points.

c) If braking device cut-off switches are fitted, actuate each brake device separately and verify the initiation of the assistance cut-off signal while pedalling.

6.10.2.3 Measurement of the maximum continuous rated power

The maximum continuous rated power shall be measured at the driven wheel of the EPAC in accordance with IEC 60034-1 when the motor reaches its thermal equilibrium as specified by the manufacturer.

In circumstance where the power is measured directly at the shaft of the electric motor, the result of the measurement shall be decreased by 1,10 to consider the measurement uncertainty and then by 1,05 to include for example the transmission losses, unless the real values of these losses are determined.

6.10.3 System based on maximum assisted rate

6.10.3.1 Maximum speed and assisted rate for which the electric motor gives assistance

6.10.3.1.1 General

The electrical motor power shall be controlled in accordance with a specified assistance ratio. The electrical motor power shall stop at the speed required by local regulations or at a lower value, limited by design.

© ISO 2020 – All rights reserved
Documents
Document Sharing Hub
Full document details: ISO_TS 4210-10_2020

6.10.3.1.2 Test method

6.10.3.1.2.1 Test conditions

Conditions of EPAC, power supplies and meters to be tested shall be as follows:

a) **Preparation and maintenance of EPAC**

The EPAC shall be driven for 30 min by 15 km/h prior to test and given maintenance to be brought to a condition where it is capable of driving under its inherent usage before starting of the test. The tyre pressure and chain tension, especially, shall be maintained in accordance with manufacturer's instructions.

b) **Power supplies**

1) In the case of using constant-voltage power supplies, they shall be maintained and adjusted the settings before the test.

2) In the case of using batteries, they shall be fully charged in advance.

c) **Meters**

The meter shall be operated for more than 30 min break-in by 15 km/h prior to test and brought to a condition where stable riding is possible before starting the test. The loss of the test bench (e.g. the frictional resistance of the test bench) is measured before test and correct the driving force. Select a meter which shall be a correction factor with a maximum 5 % of the targeted amount.

d) **Setting of weight**

Measures shall be taken to reproduce the right rolling resistance (e.g. to avoid tire slip). A dummy weight shall be mounted on the saddle and the EPAC including their jig shall be set up in such a way that the mass is loaded on the roller of the test bench. The test condition shall be described in the test report.

e) **Derailleur**

For the EPAC with derailleur, test it at the gear position where the assisted rate becomes maximum.

f) **Setting of test load**

Each load shall be set to the target value of speed and wheel driving force in setting conditions-1 and setting conditions-2.

6.10.3.1.2.2 Measuring method and calculation formulae

The measuring methods and calculation formulae shall be as follows.

a) **Items, summaries and units of measurement**

1) **Input rotation speed:** N

— use the rotation speed of the driving actuator;

— express in unit of r/min.

2) **Input torque:** T

— use the axial torque of the driving actuator;

— express in unit of N·m.

© ISO 2020 – All rights reserved

Documents
Document Sharing Hub
Full document details: ISO_TS 4210-10_2020

3) **Speed:** v

— use the speed of the roller;

— set so that the error is within 5 % of the targeted value;

— include the loss of test bench;

— express in unit of km/h.

4) **Wheel driving force:** F

— use the driving force obtained from the load indicated by the torque meter of the test bench;

— set so that the error is within 5 % of the targeted value;

— express in unit of N.

b) **Calculation formulae**

1) **Power of input of bottom-bracket spindle:** P_1

$$P_1 = \frac{2 \times \pi}{60} \times N \times T \tag{1}$$

where

P_1 is the power of input of bottom-bracket spindle [W];

N is the input rotation speed [r/min];

T is the input torque [N·m].

2) **Driving power of the EPAC:** P_2

$$P_2 = \frac{1}{3{,}6} \times v \times F \tag{2}$$

where

P_2 is the driving power of the EPAC [W];

v is the speed [km/h];

F is the wheel driving force [N].

3) **Assisted rate:** α

$$\alpha = (P_2 - P_1)/P_1 \tag{3}$$

where

α is the assisted rate;

P_1 is the power of input of bottom-bracket spindle [W];

P_2 is the driving power of the EPAC [W].

6.10.3.1.2.3 Overview diagram of equipment for testing assisted rate

Overview diagram of equipment for testing assisted rate shall be as shown in Figure 1.

© ISO 2020 – All rights reserved
Documents
Document Sharing Hub
Full document details: ISO_TS 4210-10_2020

Measure the input rotation speed and input torque with the crank driving actuator which is composed of the outside motor (item 3 in Figure 1) and the torque meter and the rotation speed meter (item 2 in Figure 1).

Ground the drive wheel to the roller (item 6 in Figure 1) of the test bench, and measure the speed of EPAC and the wheel driving force by the torque meter and rotation speed meter (item 5 in Figure 1) of the test bench. In case of the front wheel driving, ground both wheels to the same roller of the test bench.

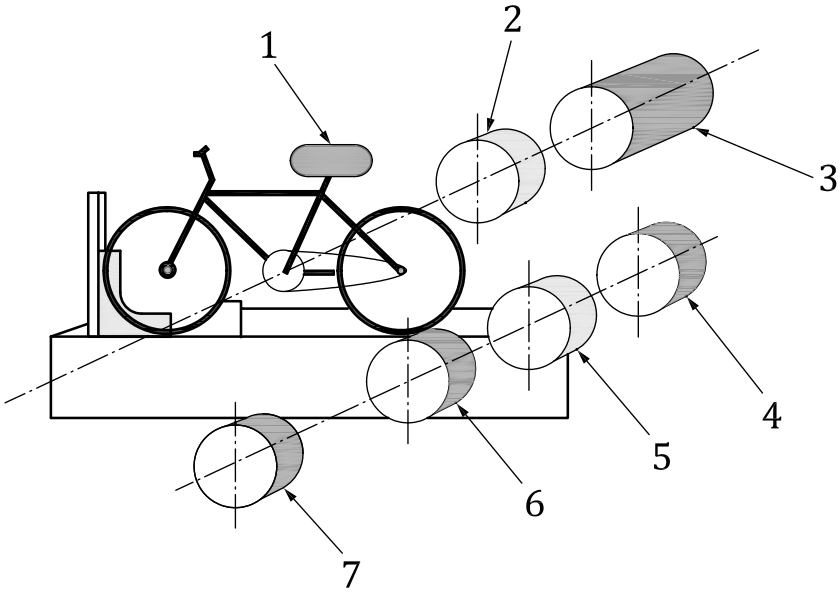

Key

1 weight loaded on saddle
2 torque meter and rotation speed meter
3 outside motor
4 power absorber (which let out the power)
5 torque meter and rotation speed meter
6 roller
7 fly wheel

Figure 1 — Overview diagram of equipment for testing assisted rate

6.10.3.1.2.4 Setting of test load

Setting of test load shall be as follows.

a) **Setting condition-1** (see Table 3 and Table 4.)

Table 3 is shown the measurement points of assisted rate at setting condition-1, which is simulated a road of gentle ascent.

Measurement numbers 3 and 4 of Table 3 are designed to measure the maximum assisted rate. The manufacturer shall declare the targeted speed v_3 and v_4 from Table 4 at the speed of which the maximum assisted rate is provided. Targeted wheel driving force F_3 and F_4 are defined in Table 4 corresponding to v_3 and v_4.

The points of measurement numbers 5 and 6 are designed to verify the assistance cut-off speed.

The manufacturer shall declare the targeted speed v_5 from Table 4 at the speed of which is equal to or less-than the assistance cut-off speed. The manufacturer shall declare the targeted speed v_6 from Table 4 at the speed of which is greater than assistance cut-off speed.

© ISO 2020 – All rights reserved

Documents
Document Sharing Hub
Full document details: ISO_TS 4210-10_2020

Table 3 — Loading condition when travelling a road of gentle ascent

Measurement number	Targeted speed km/h	Targeted wheel driving force N
1	5	30
2	10	33
3	v_3	F_3
4	v_4	F_4
5	v_5	F_5
6	v_6	F_6

Table 4 — Targeted wheel driving force corresponding to targeted speed arbitrarily designated at measurement numbers 3, 4, 5 and 6

Targeted speed km/h	Targeted wheel driving power N
11	34
12	35
13	36
14	37
15	38
16	40
17	41
18	42
19	44
20	45
21	47
22	49
23	50
24	52
25	54
26	56
27	59
28	61
29	63
30	65
31	68
32	70
33	73
34	76
35	78

b) **Setting condition-2** (see Table 5 and Table 6.)

Table 5 is shown the measurement points of assisted rate at setting condition-2, which is simulated a road of steep ascent.

Measurement numbers 9 and 10 of Table 5 are designed to measure the maximum assisted rate. The manufacturer shall declare the targeted speed v_9 and v_{10} from Table 6 at the speed of which the

© ISO 2020 – All rights reserved
Documents
Document Sharing Hub
Full document details: ISO_TS 4210-10_2020

maximum assisted rate is provided. Targeted wheel driving force F_9 and F_{10} are defined in Table 6 corresponding to v_9 and v_{10}.

The points of measurement numbers 11 and 12 are designed to verify the assistance cut-off speed.

The manufacturer shall declare the targeted speed v_{11} from Table 6 at the speed of which is equal to or less-than the assistance cut-off speed. The manufacturer shall declare the targeted speed v_{12} from Table 6 at the speed of which is greater than assistance cut-off speed.

Table 5 — Loading condition when travelling a road of steep ascent

Measurement number	Targeted speed km/h	Targeted wheel driving force N
7	5	55
8	10	58
9	v_9	F_9
10	v_{10}	F_{10}
11	v_{11}	F_{11}
12	v_{12}	F_{12}

Table 6 — Targeted wheel driving force corresponding to targeted speed arbitrary designated at measurement numbers 9, 10, 11 and 12

Targeted speed km/h	Targeted wheel driving power N
11	59
12	60
13	61
14	62
15	63
16	64
17	65
18	67
19	68
20	70
21	72
22	73
23	75
24	77
25	79
26	81
27	83
28	85
29	88
30	90
31	92
32	95
33	98
34	100

© ISO 2020 – All rights reserved

Documents
Document Sharing Hub
Full document details: ISO_TS 4210-10_2020

Table 6 *(continued)*

Targeted speed km/h	Targeted wheel driving power N
35	103

6.10.3.1.2.5 Test procedure

This test shall be carried out in accordance with the following procedure by mounting the EPAC on the test bench, with the bottom bracket spindle connected to the external driving actuator and in the order corresponding to setting condition-1 and setting condition-2.

a) Measure the loss of the test bench. In case of the front driving wheel, add the rolling resistance of front wheel to the loss of the test bench.

b) Switch on the power assisting system of the EPAC.

c) Start the driving actuator and adjust the speed to the targeted value.

d) Increase power absorption of the test bench and adjust the wheel driving force to the targeted value.

e) Confirm that the speed and wheel driving force fall within their respective permitted ranges.

f) Record each average measurement value under constant condition.

g) In accordance with each formula, calculate the assisted rate by each measurement number.

6.11 Walk assistance mode

6.11.1 Requirements

If local regulation allows walk assistance mode, EPAC can be equipped with a walk assistance mode that operates up to a maximum speed of 6 km/h.

This mode shall be activated by the voluntary and maintained action of the user either when riding without pedalling or when the user is pushing the EPAC. Conformity is checked by the test described in 6.11.2.

6.11.2 Test method for EPAC with walk assistance mode

6.11.2.1 Test conditions

The test may be performed either on a test track (See 6.10.2.2.2.2), a test bench or on a stand that keeps the motor driven wheel free of the ground.

The speed-measuring device shall have the following characteristics:

a) accuracy: ±2 %;

b) resolution: 0,1 km/h.

The ambient temperature shall be between 5 °C and 35 °C.

Maximum wind speed: 3 m/s.

The battery shall be fully charged in accordance with the manufacturer's instructions.

© ISO 2020 – All rights reserved
Documents
Document Sharing Hub
Full document details: ISO_TS 4210-10_2020

6.11.2.2 Test procedure

a) Activate the walk assistance mode and verify that the speed increases up to 6 km/h maximum designed speed or lower value.

b) Verify that the speed reduces progressively to 0 km/h when the walk assistance mode is deactivated.

c) Activate the walk assistance mode and maintain it for 1 min. Verify that speed is equal to or less than 6 km/h.

d) Verify that the walk assistance mode is activated only when the actuation of the device to initiate it is maintained.

6.12 Electromagnetic compatibility (EMC)

6.12.1 Requirement

EPACs shall be in accordance with Annex A.

NOTE 1 EPACs can be subject to the requirements of the national regulations in the country where the EPAC is marketed.

NOTE 2 For ESAs, see Annex B.

6.13 Anti-tampering measure

6.13.1 General

Anti-tampering measures apply to tampering or modifications that general consumers as well as other market actors (e.g. retailers) carry out concerning the motor controller, drive unit or other parts of power assisting system by using commercially available tools, equipment or parts.

6.13.2 Prevention of tampering of the motor

The following anti-tampering requirements shall be taken into account as a minimum:

a) Anti-tampering relevant parameters indicated below shall only be accessible to the manufacturer or authorized persons and changes of software configuration parameters shall require programming tools that are not commercially available or which are security protected:

   1) maximum speed with motor assistance (all systems);

   2) parameters affecting the maximum EPAC speed limited by design;

   3) maximum gear ratio (system with middle motors);

   4) maximum motor power (all systems);

   5) maximum speed of walk assistance;

   6) maximum power assistance ratio, or the relationship between EPAC speed and maximum power assistance ratio (where local regulations for assistance ratio apply).

b) Reasonably foreseeable tampering with configuration parameters relevant to the conformity of the EPAC shall be prevented or compensated for by effective countermeasures, e.g. plausibility logic to detect tampering with sensors or falsification of sensor input;

c) Closed set of components (i.e. operation only with released battery);

d) Protection against opening of relevant components without traces (sealing).

© ISO 2020 – All rights reserved

Documents
Document Sharing Hub
Full document details: ISO_TS 4210-10_2020

6.14 Thermal hazards

6.14.1 Non-continuous contact surface

Warning symbol W017 in accordance with ISO 7010:2011 shall be placed on the surface, if the temperature of the non-continuous contact surface can be above the limits of 1 s contact period defined in ISO 13732-1. Brake systems are excluded from this requirement.

NOTE A non-continuous contact surface is a surface on an EPAC which has a possibility of touching the rider's hands, legs etc. during normal use and maintenance.

6.14.2 Continuous contact surface

Continuous contact surface of at least 10 minutes contact period shall not exceed the temperature limit defined in ISO 13732-1.

NOTE Surface of continuous contact is handlebar grip, handle grip lever and seat.

6.14.3 Ambient temperature

Test condition of 6.14.1 and 6.14.2 shall be 25 (0/−5) °C.

7 Mechanical requirements

7.1 General

EPACs shall be in accordance with the requirements of ISO 4210-2:2015, Clause 4 in accordance with their specific bicycle type.

In addition, EPACs which have assisted ratio greater than 2 shall be in accordance with the requirements which are specified from 7.2 to 7.14.

Each frame test shall include the battery system and electric drive unit or the false "dummy" example of the similar mass ±1 kg as the battery system and electric drive unit.

7.2 Brakes — Heat-resistance test

The parameters of the test described in ISO 4210-4:2014, Table 1 shall be replaced by parameters given in Table 7. All other parameters shall be kept.

Table 7 — Total braking energy

Bicycle type	City and trekking
Total braking energy, E Wh	75

7.3 Handlebar and stem assembly — Lateral bending test

The parameters of the test described in ISO 4210-5:2014, Table 2 shall be replaced by parameters given in Table 8. All other parameters shall be kept.

© ISO 2020 – All rights reserved
Documents
Document Sharing Hub
Full document details: ISO_TS 4210-10_2020

Table 8 — Forces on handlebars

Bicycle type	City and trekking
Force, F_2 N	800

7.4 Handlebar stem — Forward bending test

The parameters of the test described in ISO 4210-5:2014, Table 3 shall be replaced by parameters given in Table 9. All other parameters shall be kept.

Table 9 — Forces on stems

Forces in newtons

Bicycle type		City and trekking
Stage 1	Force, F_3	1 600
Stage 2	Force, F_4	2 600

7.5 Handlebar to handlebar stem — Torsional security test

The parameters of the test described in ISO 4210-5:2014, Table 4 shall be replaced by parameters given in Table 10. All other parameters shall be kept.

Table 10 — Torque on handlebar

Torques in newton metres

Bicycle type	City and trekking
Torque, T_1	70

7.6 Handlebar and stem assembly — Fatigue test

The parameters of the test described in ISO 4210-5:2014, Table 7 shall be replaced by parameters given in Table 11. All other parameters shall be kept.

Table 11 — Forces on handlebars and bar-ends

Forces in newtons

Bicycle type		City and trekking
Stage 1	Force, F_6	220
Stage 2	Force, F_7	280

7.7 Frame — Impact test (falling mass)

The parameters of the test described in ISO 4210-6:2015, Table 1 shall be replaced by parameters given in Table 12. All other parameters shall be kept.

Table 12 — Drop heights

Dimensions in millimetres

Bicycle type	City and trekking
Drop height, h_1	360

© ISO 2020 – All rights reserved

Documents
Document Sharing Hub
Full document details: ISO_TS 4210-10_2020

7.8 Frame and front fork assembly — Impact test (falling frame)

The parameters of the test described in ISO 4210-6:2015, Table 2 shall be replaced by parameters given in Table 13. All other parameters shall be kept.

Table 13 — Drop heights and distribution of masses at seat post, steering head, and bottom bracket

Bicycle type	City and trekking
Mass 1 Seat-post, M_1 kg	30
Mass 2 Steering head, M_2 kg	10
Mass 3 Bottom bracket, M_3 kg	50
Drop height, h_2 mm	300

7.9 Frame — Fatigue test with horizontal forces

The parameters of the test described in ISO 4210-6:2015, Table 4 shall be replaced by parameters given in Table 14. All other parameters shall be kept.

Table 14 — Forces and test cycles on front fork dropouts

Bicycle type		City and trekking	Mountain
Front wheel driven EPAC	Forward force, F_2 N	600	1 200
	Rearward force, F_3 N	600	600
Other driving systems	Forward force, F_2 N	500	1 200
	Rearward force, F_3 N	500	600
Test cycles, C_1		100 000	100 000
Locking conditions of the suspension fork and/or the suspension unit kg		90	80

7.10 Frame — Fatigue test with a vertical force

The parameters of the test described in ISO 4210-6:2015, Table 5 shall be replaced by parameters given in Table 15. All other parameters shall be kept.

Table 15 — Forces on seat stem

Forces in newtons

Bicycle type	City and trekking	Mountain
Force, F_4	1 100	1 400

© ISO 2020 – All rights reserved
Documents
Document Sharing Hub
Full document details: ISO_TS 4210-10_2020

7.11 Front fork — Static bending test

The requirement in ISO 4210-2:2015, 4.9.4 shall be replaced as follows for mountain EPAC.

When tested by the method described in ISO 4210-6:2014, 5.3, there shall be no fractures or visible cracks in any part of the fork.

The parameters of the test described in ISO 4210-6:2015, Table 6 shall be replaced by parameters given in Table 16. All other parameters shall be kept.

Table 16 — Forces on loading attachment

Forces in newtons

Bicycle type	City and trekking	Mountain
Force, F_5	1 500	2 000

7.12 Front fork — Rearward impact test

The parameters of the test described in ISO 4210-6:2015, Tables 7 and 8 shall be replaced by parameters given in Tables 17 and 18. All other parameters shall be kept.

Table 17 — Drop heights

Dimensions in millimetres

Bicycle type		City and trekking
Drop height, h_4	Forks made entirely of metal	360
	Forks which have composite parts	360

Table 18 — Torque on fork

Torques in newton metres

Bicycle type	City and trekking
Torque, T	80

7.13 Front fork — Bending fatigue test plus rearward impact test

The parameters of the test described in ISO 4210-6:2015, Table 9 shall be replaced by parameters given in Table 19. All other parameters shall be kept.

Table 19 — Forces on loading attachment

Forces in newtons

Bicycle type	City and trekking	Mountain
Force, F_6	±500	±675

7.14 Seat-post — Fatigue test

The parameters of the test described in ISO 4210-9:2014, Table 2 shall be replaced by parameters given in Table 20. All other parameters shall be kept.

© ISO 2020 – All rights reserved

Documents
Document Sharing Hub
Full document details: ISO_TS 4210-10_2020

Table 20 — Forces on seat-post

Forces in newtons

Bicycle type	Mountain	
Force, F_3	Dropper seat-post/ Suspension dropper seat-post	Rigid seat-post/ Suspension seat-post
	1 320	1 400

8 Manufacturer's instructions

These instructions shall be in accordance with ISO 4210-2:2015, Clause 5 and provisions in force in the country in which the product is marketed.

In addition, instructions shall contain the following information:

a) concept and description of electric assistance including varying levels of motor assistance;

b) explanation of product use (e.g. switch on/off);

c) meaning of symbol and visual tell-tales used shall be explained in the instruction for use;

d) specific EPAC warnings as follows:

— inappropriate use including manipulation of the electric engine power management system;

— contact with hot surfaces.

e) recommendation for cleaning and the use of high pressure cleaners;

f) specific EPAC recommendation for use (e.g. removal of the battery, temperature range for the use of the EPAC including battery, use of walk assistance mode);

g) recommendations about charging:

— temperature range for charging;

— indoor or outdoor charging;

— importance of the instructions contained on the label of, and in the instructions of, the charger and battery.

h) information about consequences to the user in case of tampering;

i) the A-weighted emission sound pressure level at the rider ears is less than 70 dB(A), if required by regional regulation;

j) recommendation for charger and battery compatibility.

NOTE It is permitted to include any other relevant information at the discretion of the manufacturer.

9 Marking

The marking shall be in accordance with ISO 4210-2:2015, Clause 6.

EPACs shall be marked with the following information at a readily visible location such as near the seat post or handlebar:

— maximum permissible load;

— nominal mass of EPAC;

© ISO 2020 – All rights reserved
Documents
Document Sharing Hub
Full document details: ISO_TS 4210-10_2020

— type and model of bicycle.

The frame shall be visibly and durably marked with following information:

— name of the manufacturer of complete EPAC or the manufacturer's representative;

— the number of this document, i.e. ISO TS 4210-10 (letter), e.g.

ISO TS 4210-10 C = City and Trekking EPAC,

M = Mountain EPAC,

R = Racing EPAC,

Y = Young adult EPAC.

NOTE 1 The mark “ISO 4210-2” which is required in ISO 4210-2:2015, 6.1 b) is unnecessary.

NOTE 2 The markings below are required if required by regional regulation:

— CE marking;

— contact and address of the manufacturer or authorized representative;

— assistance cut-off speed XX km/h;

— maximum continuous rated power XX kW;

— year of construction, that is the year in which the manufacturing was completed (it is not possible to use a code).

© ISO 2020 – All rights reserved

Documents
Document Sharing Hub
Full document details: ISO_TS 4210-10_2020

Annex A
(normative)

Electromagnetic compatibility of EPACs

A.1 Type testing procedures

An EPAC shall be type tested directly by following the provisions laid down in A.2.

A.2 EPAC requirements

A.2.1 General

If an EPAC installation is tested, it shall fulfil the requirements of this Annex under normal conditions of use. An EPAC shall be tested for radiated emissions and for immunity to radiated disturbances. Tests for conducted emissions or immunity to conducted disturbances are not required.

A.2.2 Test plan

Prior to performing the tests, a test plan should be generated containing at least mode of operation, stimulated function(s), monitored function(s), pass/fail criteria and, for intentional radiators, intended emissions.

A.2.3 Broadband electromagnetic radiation from EPACs

A.2.3.1 Method of measurement

The electromagnetic radiation generated by the EPAC representative of its type shall be measured using the method described in A.3.

A.2.3.2 EPAC broadband limits

A.2.3.2.1 Limit for 10 m measurement distance

If measurements are made using the method described in A.3 using a EPAC-to-antenna spacing of (10,0 ± 0,2) m, the limits shall be 32 dB(μV/m) in the 30 MHz to 75 MHz frequency band and 32 dB(μV/m) to 43 dB(μV/m) in the 75 MHz to 400 MHz frequency band, this limit increasing logarithmically with frequencies above 75 MHz (see Table A.1 and Figure A.1). In the 400 MHz to 1 000 MHz frequency band the limit remains constant at 43 dB(μV/m).

A.2.3.2.2 Limit for 3 m measurement distance

If measurements are made using the method described in A.3 using a EPAC-to-antenna spacing of (3,0 ± 0,05) m, the limits shall be 42 dB(μV/m) in the 30 MHz to 75 MHz frequency band and 42 dB(μV/m) to 53 dB(μV/m) in the 75 MHz to 400 MHz frequency band, this limit increasing logarithmically with frequencies above 75 MHz (see Table A.1 and Figure A.1). In the 400 MHz to 1 000 MHz frequency band the limit remains constant at 53 dB(μV/m).

A.2.3.2.3 Requirement

On the EPAC representative of its type, the measured values, expressed in dB(μV/m) shall be below the EPAC broadband limits stated above.

© ISO 2020 – All rights reserved
Documents
Document Sharing Hub
Full document details: ISO_TS 4210-10_2020

A.2.4 Narrowband electromagnetic radiation from EPACs

A.2.4.1 Method of measurement

The electromagnetic radiation generated by the EPAC representative of its type shall be measured using the method described in A.3.

A.2.4.2 EPAC narrowband limits

A.2.4.2.1 Limit for 10 m measurement distance

If measurements are made using the method described in A.3 using a EPAC-to-antenna spacing of (10,0 ± 0,2) m, the limits shall be 22 dB(μV/m) in the 30 MHz to 75 MHz frequency band and 22 dB(μV/m) to 33 dB(μV/m) in the 75 MHz to 400 MHz frequency band, this limit increasing logarithmically with frequencies above 75 MHz (see Table A.1 and Figure A.1). In the 400 MHz to 1 000 MHz frequency band the limit remains constant at 33 dB(μV/m).

A.2.4.2.2 Limit for 3 m measurement distance

If measurements are made using the method described in A.3 using a EPAC-to-antenna spacing of (3,0 ± 0,05) m, the limits shall be 32 dB(μV/m) in the 30 MHz to 75 MHz frequency band and 32 dB(μV/m) to 43 dB(μV/m) in the 75 MHz to 400 MHz frequency band, this limit increasing logarithmically with frequencies above 75 MHz (see Table A.1 and Figure A.1). In the 400 MHz to 1 000 MHz frequency band the limit remains constant at 43 dB(μV/m).

A.2.4.2.3 Requirement

On the EPAC representative of its type, the measured values, expressed in dB(μV/m) shall be below the EPAC broadband limits stated above.

A.2.5 Overview of radiated emission limits for EPACs

Radiated emission limits for EPACs are shown in Figure A.1 and Table A.1.

© ISO 2020 – All rights reserved

Documents
Document Sharing Hub
Full document details: ISO_TS 4210-10_2020

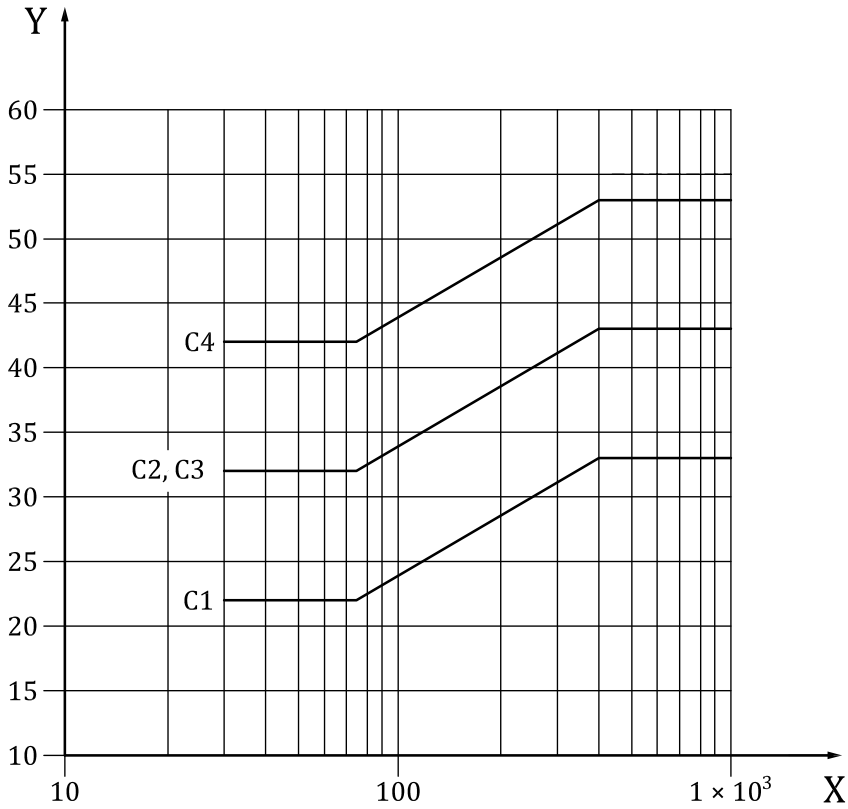

Key

X frequency f in MHz

Y field strength limit in dB (μV/m)

C1 narrowband radiation emission limit for EPACs, antenna at 10 m

C2 broadband radiation emission limit for EPACs, antenna at 10 m

C3 narrowband radiation emission limit for EPACs, antenna at 3 m

C4 broadband radiation emission limit for EPACs, antenna at 3 m

NOTE 1 The limits are identical to the limits defined in UNECE R10 revision 5 Appendices 2 to 5 which are applicable to Speed-EPACS.

NOTE 2 The limits take into account measurement uncertainties.

Figure A.1 — Radiated emission limits for EPACs

Table A.1 — Radiated emission limits for EPACs

Curve No.	Disturbance category	Detector acc. to CISPR 16-1-1	Measurement distance m	Equation for limit [dB(μV/m)] with frequency, f [MHz]		
				$30 \le f \le 75$	$75 < f < 400$	$400 \le f \le 1\,000$
C1	Narrowband	Average	10	22	$22 + 15{,}13 \cdot \log(f/75)$	33
C2	Broadband	Quasi-peak	10	32	$32 + 15{,}13 \cdot \log(f/75)$	43
C3	Narrowband	Average	3	32	$32 + 15{,}13 \cdot \log(f/75)$	43
C4	Broadband	Quasi-peak	3	42	$42 + 15{,}13 \cdot \log(f/75)$	53

A.2.6 EPAC immunity to electromagnetic radiation

A.2.6.1 Method of testing

The immunity to electromagnetic radiation of the EPAC representative of its type shall be tested by the method described in A.4.

© ISO 2020 – All rights reserved
Documents
Document Sharing Hub
Full document details: ISO_TS 4210-10_2020

A.2.6.2 Performance criteria and monitoring

The EPAC is deemed to fulfil the requisite immunity conditions if, during the tests carried out in the manner required by A.4, there are no abnormal changes in the speed of the EPAC drive wheels, there are no deteriorations in the direct control of the EPAC which might be observed by the rider and there are no signs of operational deterioration which might mislead other road users.

For the purpose of monitoring the external part of the EPAC and of determining whether the above conditions have been met, a video camera may be used.

If an EPAC fails the test defined in this annex, it shall be verified as having failed under the relevant test conditions and not as a result of the generation of uncontrolled fields.

A.2.6.3 EPAC immunity test levels

If tests are made using the method described in A.4, the field strength shall be 30 V/m root-mean-square (rms) in over 90 % of the 20 MHz to 2 000 MHz frequency band and a minimum of 25 V/m rms over the whole 20 MHz to 2 000 MHz frequency band.

The EPAC representative of its type shall be considered as conforming to the immunity requirements if, during the tests performed in accordance with A.4, the performance criteria in accordance with A.2.6.2 are fulfilled.

A.3 Method of measurement of radiated electromagnetic emissions from EPACs

A.3.1 General

This test is intended to measure the radiated broadband and narrow-band emissions generated by electrical or electronic systems fitted to the EPAC (electric motors, microprocessor-based systems etc.).

As far as not otherwise stated in this annex the test shall be performed in accordance with CISPR 12.

A.3.2 Test location

In accordance with CISPR 12:2007, 5.2.

A.3.3 Measuring equipment

In accordance with CISPR 12:2007, 5.1.

Measuring instrument parameters in accordance with CISPR 12:2007, 5.1.2 (use of scanning receiver) or 5.1.1 (use of spectrum analyser), respectively.

Antenna type in accordance with CISPR 12:2007, 5.1.3.

A.3.4 Test setup

Measuring distance, antenna height and antenna polarisations in accordance with CISPR 12:2007, 5.2.3.

The left and right side of the EPAC shall be measured.

There shall be no electrical connection between the EPAC and the test surface and no connections between the EPAC and the measuring equipment. Contact between the wheels and the test surface is not regarded as an electrical connection. Test setup is shown in Figure A.2.

© ISO 2020 – All rights reserved

Documents
Document Sharing Hub
Full document details: ISO_TS 4210-10_2020

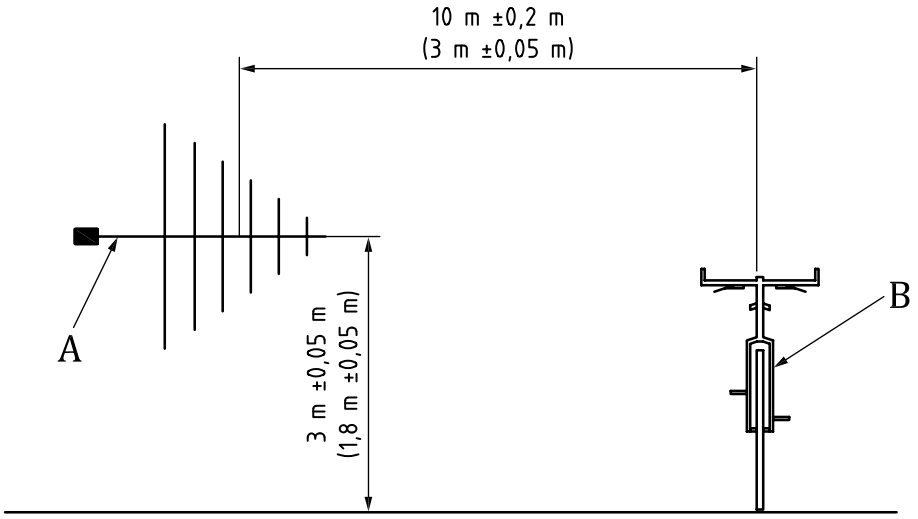

Key

A antenna

B EPAC

Figure A.2 — Principle test setup for radiated emissions from EPACs

A.3.5 Test procedure and test method

In accordance with CISPR 12 as far as not otherwise stated in this annex.

A.3.6 Test requirements for broadband emissions

A.3.6.1 General

The radiated broadband emissions shall be measured in the 30 MHz to 1 000 MHz frequency range. The left and right side of the EPAC shall be measured with the antenna in horizontal and vertical polarisation.

A.3.6.2 Detector

A quasi-peak detector in accordance with CISPR 16-1-1 shall be used to measure broadband electromagnetic radiation. For time efficiency it is possible to use a peak detector. Any peak measurements with results at or above the quasi-peak limit shall be re-measured using the quasi-peak detector.

A.3.6.3 EPAC state during test

The EPAC shall be driven on a dynamometer without load or minimum possible load at 100 % of the design maximum assistance speed (EPAC operating with motor assistance, “engine running”). All EPAC systems including light shall be activated.

NOTE CISPR 12 states “shall be tested with the vehicle driven on a dynamometer without a load” for vehicles with an electric propulsion motor, but an EPAC can require a low load to enable proper operation of the motor assistance.

© ISO 2020 – All rights reserved
Documents
Document Sharing Hub
Full document details: ISO_TS 4210-10_2020

A.3.7 Test requirements for narrow-band emissions

A.3.7.1 General

The radiated narrow-band emissions shall be measured in the 30 MHz to 1 000 MHz frequency range. The left and right side of the EPAC shall be measured with the antenna in horizontal and vertical polarisation.

A.3.7.2 Detector

An average detector in accordance with CISPR 16-1-1 shall be used to measure narrowband electromagnetic radiation.

A.3.7.3 EPAC state during test

The EPAC shall be operated in standstill mode: All EPAC systems including light activated, EPAC ready to be started, but no assistance given by the motor ("key on, engine off").

A.4 Methods of testing EPAC immunity to electromagnetic radiation

A.4.1 General

This test is intended to demonstrate the immunity of the EPAC electronic systems. The EPAC shall be subject to electromagnetic fields as described in this Annex. The EPAC shall be monitored during the tests. As far as not otherwise stated in this annex the test shall be performed in accordance with ISO 11451-2.

A.4.2 Test location

In accordance with ISO 11451-2:2015, Clause 5.

A.4.3 Test instrumentation

In accordance with ISO 11451-2:2015, Clause 6.

A.4.4 Test setup

In accordance with ISO 11451-2:2015, Clause 7 as far as not otherwise stated in this annex. There shall be no electrical connection between the EPAC and the test surface and no connections between the EPAC and the test equipment. Contact between the wheels and the test surface is not regarded as an electrical connection

A.4.5 Test procedure and test method

In accordance with ISO 11451-2:2015, Clause 8 as far as not otherwise stated in this annex.

A.4.6 Test requirements

A.4.6.1 Frequency range, dwell time, polarisation, modulation

The EPAC shall be exposed to electromagnetic radiation in the 20 MHz to 2 000 MHz frequency range in vertical polarisation.

The test signal modulation shall be:

a) AM (amplitude modulation) with 1 kHz modulation and 80 % modulation rate in accordance with ISO 11451-1 in the 20 MHz to 800 MHz frequency range, and

© ISO 2020 – All rights reserved

Documents
Document Sharing Hub
Full document details: ISO_TS 4210-10_2020

b) PM (pulse modulation) with 577 µs pulse width and 4 600 µs pulse repetition period in accordance with ISO 11451-1 in the 800 MHz to 2 000 MHz frequency range.

Frequency step size and dwell time shall be chosen in accordance with ISO 11451-1.

A.4.6.2 EPAC state during tests

The test shall be done in the following operating modes:

a) Standstill mode (all EPAC systems including light activated, EPAC ready to be started, but no assistance is given by the motor);

b) EPAC operating (with motor assistance) at 90 % of the design maximum assistance speed.

A.4.6.3 Reference point and position of EPAC

The front side of the EPAC shall be exposed to the electromagnetic fields. The reference point is the point at which the field strength shall be established and is defined as follows:

a) At least 2 m horizontally from the antenna phase centre or at least 1 m vertically from the radiating elements of the transmission-line-system (TLS);

b) On the EPAC's centre line (plane of longitudinal symmetry);

c) At a height of (1,0 ± 0,05) m above the plane on which the EPAC rests;

d) At (0,2 ± 0,2) m behind the vertical centreline of the EPAC's front wheel.

© ISO 2020 – All rights reserved
Documents
Document Sharing Hub
Full document details: ISO_TS 4210-10_2020