TECHNICAL SPECIFICATION

# ISO/TS 7127

First edition
2023-08

# Light and lighting — Building information modelling properties for lighting — Lighting systems

*Lumière et éclairage — Propriétés de modélisation des informations de la construction pour l'éclairage — Systèmes d'éclairage*

Reference number
ISO/TS 7127:2023(E)

Documents
Document Sharing Hub
© ISO 2023

Full document details: ISO_TS 7127_2023

**COPYRIGHT PROTECTED DOCUMENT**

© ISO 2023

All rights reserved. Unless otherwise specified, or required in the context of its implementation, no part of this publication may be reproduced or utilized otherwise in any form or by any means, electronic or mechanical, including photocopying, or posting on the internet or an intranet, without prior written permission. Permission can be requested from either ISO at the address below or ISO's member body in the country of the requester.

ISO copyright office
CP 401 • Ch. de Blandonnet 8
CH-1214 Vernier, Geneva
Phone: +41 22 749 01 11
Email: copyright@iso.org
Website: www.iso.org

Published in Switzerland



© ISO 2023 – All rights reserved

Documents
Document Sharing Hub

Full document details: ISO_TS 7127_2023

# Contents

Page

**Foreword** ..... **iv**
**Introduction** ..... **v**
**1 Scope** ..... **1**
**2 Normative references** ..... **1**
**3 Terms and definitions** ..... **1**
**4 Principal structure** ..... **2**
4.1 General ..... 2
4.2 Detailed description of set of attributes ..... 2
4.2.1 General ..... 2
4.2.2 GUID ..... 3
4.2.3 ID ..... 3
4.2.4 Name ..... 3
4.2.5 Description ..... 3
4.2.6 Symbol ..... 3
4.2.7 Format, Unit ..... 3
4.2.8 Value set ..... 3
4.2.9 Examples ..... 4
4.3 Further IT-related attributes ..... 4
**5 Properties for lighting systems** ..... **5**
**Bibliography** ..... **58**

© ISO 2023 – All rights reserved


Documents
Document Sharing Hub
Full document details: ISO_TS 7127_2023

# Foreword

ISO (the International Organization for Standardization) is a worldwide federation of national standards bodies (ISO member bodies). The work of preparing International Standards is normally carried out through ISO technical committees. Each member body interested in a subject for which a technical committee has been established has the right to be represented on that committee. International organizations, governmental and non-governmental, in liaison with ISO, also take part in the work. ISO collaborates closely with the International Electrotechnical Commission (IEC) on all matters of electrotechnical standardization.

The procedures used to develop this document and those intended for its further maintenance are described in the ISO/IEC Directives, Part 1. In particular, the different approval criteria needed for the different types of ISO documents should be noted. This document was drafted in accordance with the editorial rules of the ISO/IEC Directives, Part 2 (see www.iso.org/directives).

Attention is drawn to the possibility that some of the elements of this document may be the subject of patent rights. ISO shall not be held responsible for identifying any or all such patent rights. Details of any patent rights identified during the development of the document will be in the Introduction and/or on the ISO list of patent declarations received (see www.iso.org/patents).

Any trade name used in this document is information given for the convenience of users and does not constitute an endorsement.

For an explanation of the voluntary nature of standards, the meaning of ISO specific terms and expressions related to conformity assessment, as well as information about ISO's adherence to the World Trade Organization (WTO) principles in the Technical Barriers to Trade (TBT), see www.iso.org/iso/foreword.html.

This document was prepared by Technical Committee ISO/TC 274, *Light and Lighting*.

Any feedback or questions on this document should be directed to the user's national standards body. A complete listing of these bodies can be found at www.iso.org/members.html.


© ISO 2023 – All rights reserved
Documents
Document Sharing Hub
Full document details: ISO_TS 7127_2023

# Introduction

Building information modelling (BIM) is a concurrent process that gives engineering and construction professionals the tools to more efficiently plan, construct, and manage buildings and infrastructure.

Within standardisation committees much work is being performed to define the fundamental principles of BIM that will allow this to happen in an effective and consistent manner.

For lighting applications, it is essential that this work is monitored and where required input is made to ensure that the requirements for lighting applications are considered.

© ISO 2023 – All rights reserved


Documents
Document Sharing Hub
Full document details: ISO_TS 7127_2023

Documents
Document Sharing Hub

Full document details: ISO_TS 7127_2023

# Light and lighting — Building information modelling properties for lighting — Lighting systems

## 1 Scope

This technical specification identifies and clarifies lighting properties for digital building design and maintenance.

This document provides all the needed properties to design and to describe lighting systems. These properties are intended to be used for mapping between data providers and requesters. The mapping of the identifiers enables the exchange of luminaire and sensing device data within different databases.

The unambiguous mapping and description of properties improves the data quality, reduces misinterpretations and the processing time in digital environments. Therefore, the properties listed in this document establish the essential description of lighting systems in BIM systems and databases.

The listed properties in this document are used to structure the product data sheet which is complemented with real product information.

## 2 Normative references

The following documents are referred to in the text in such a way that some or all of their content constitutes requirements of this document. For dated references, only the edition cited applies. For undated references, the latest edition of the referenced document (including any amendments) applies.

ISO 23386:2020, *Building information modelling and other digital processes used in construction — Methodology to describe, author and maintain properties in interconnected data dictionaries*

CIE S 017:2020, *ILV: International Lighting Vocabulary*

ISO 80000-7, *Quantities and units — Part 7: Light*

## 3 Terms and definitions

For the purposes of this document, the following terms and definitions given in CIE S 017, ISO 80000-7 and the following apply.

ISO and IEC maintain terminology databases for use in standardization at the following addresses:

— ISO Online browsing platform: available at https://www.iso.org/obp

— IEC Electropedia: available at https://www.electropedia.org/

**3.1**
**building information modelling**
**BIM**
use of a shared digital representation of a built object (including buildings, bridges, roads, process plants, etc.) to facilitate design, construction and operation processes to form a reliable basis for decisions

Note 1 to entry: The acronym BIM also stands for the shared digital representation of the physical and functional characteristics of any construction works.

[SOURCE: ISO 29481-1:2016, 3.2]

© ISO 2023 – All rights reserved

Documents
Document Sharing Hub
Full document details: ISO_TS 7127_2023

**3.2**
**data dictionary**
database that contains metadata

[SOURCE: ISO/IEC 2382:2015, 2121501]

**3.3**
**attribute**
data element for the computer-sensible description of a property, group of properties, etc.

Note 1 to entry: An attribute describes only one single detail of a property or a group of properties.

EXAMPLE The GUID of a property, the name of a property, the definition of a group of properties.

[SOURCE: ISO 23386:2020, 3.4, modified – Example extended]

**3.4**
**property**
inherent or acquired feature of an item

EXAMPLE Thermal efficiency, heat flow, sound reduction index, sound power level, colour.

[SOURCE: ISO 23386:2020, 3.17]

# 4 Principal structure

## 4.1 General

A lighting system (for example a luminaire or a sensing device) is described by specific properties, providing the possibility to communicate about it in an application or specification.

The properties for lighting systems have been organized in tables listed in Clause 5 according to different disciplines. This sub-division is indicative only and not to be taken as exclusive:

— Mechanical properties – ID 01 (Table 1);

— Electrical properties – ID 02 (Table 2);

— Emergency lighting properties – ID 03 (Table 3);

— Photometric properties – ID 04 (Table 4);

— Sensing device properties – ID 05 (Table 5);

— Mounting & Accessory properties – ID 06 (Table 6);

— Marketing properties – ID 07 (Table 7);

— Operations & Maintenance properties – ID 08 (Table 8);

— Environmental properties – ID 09 (Table 9).

## 4.2 Detailed description of set of attributes

### 4.2.1 General

The structure of the attributes is according to ISO 23386:2020 and enhanced by the property ID.

The properties have no mandatory or optional aspect. All properties are equal in importance and hierarchy. The use case and the application provide a structure and are mandatory to the properties.


© ISO 2023 – All rights reserved
Documents
Document Sharing Hub
Full document details: ISO_TS 7127_2023

#### 4.2.2 GUID

In ISO 23386:2020, PA001 named “Globally unique identifier”.

Identifier given to a product that guarantees its uniqueness throughout its entire life (defined in ISO 6707-2:2017, 3.2.46).

This attribute identifies the property unambiguously. A Globally Unique identifier GUID is generated using an algorithm. This machine-readable code will allow matching across databases, lists and data template.

In ISO 16739-1 (IFC) and ISO 12006-3 the compressed version of GUID is used. It can be uncompressed to the standard GUID with open tools.

#### 4.2.3 ID

This attribute identifies the property unambiguously. It is human-readable and corresponds to the GUID.

Note The ID always starts with the table number from 4.1 followed by a dash and an individual serial number with four digits.

#### 4.2.4 Name

In ISO 23386:2020, PA016 named “Names in language en-EN”.

The name of the property.

#### 4.2.5 Description

In ISO 23386:2020, PA018 named “Descriptions in language en-EN”.

This attribute is used to provide a plain language description of the property.

For some descriptions the name is enough. To avoid the repeating of the name, just “*identical with name.*” is entered.

#### 4.2.6 Symbol

In ISO 23386:2020, PA022 named “Symbols of the property in a given property group”.

Symbols for quantities are given in the ISO 80000 and IEC 80000 series. The symbols for quantities are written in italics. A given symbol can indicate different quantities. (ISO 80000-1:2022).

#### 4.2.7 Format, Unit

In ISO 23386:2020, PA037 named “Digital format”.

Precision is the maximum number of significant digits that can be represented in a format, or the number of digits that a result is rounded to [ISO/IEC 60559:2020].

In ISO 23386:2020, PA033 named “Units”.

Concept type representing a scale that enables a value to be measured. Properties that do not have a unit are to be designated as not applicable (n.a.).

#### 4.2.8 Value set

In ISO 23386:2020, PA039 named “List of possible values in language en-EN”.

© ISO 2023 – All rights reserved

Documents
Document Sharing Hub
Full document details: ISO_TS 7127_2023

Collection of acceptable values for a property. Values outside the value set are not permitted. Multiple values may be possible for some properties.

#### 4.2.9 Examples

In ISO 23386:2020, PA019 named “Examples in language en-EN”.

Samples for a value of the specific property.

### 4.3 Further IT-related attributes

Where potential attributes are not specified in 4.2, they may be defined separately within a data dictionary. These attributes can be found in ISO 23386:2020:

— **Definitions in language en-EN (PA017):** A description of the attribute in order to define it unambiguously;

— **Method of measurement (PA029):** Evaluation of construction products to ensure their suitability according to requirements in harmonised technical specifications;

— **Name of the defining values (PA034):** In a table of values, this attribute provides the name of the column headers;

— **Data type (PA030):** Format for expressing the value of the property. This can be understood as the storage type from a software perspective. (ISO/IEC 11404:2007, 8.1) Examples: String, Float, Integer;

— **Status (PA002):** Status of the property during its life cycle. Example: Active;

— **Date of creation (PA003):** Date of validation of the property creation request. All dates in accordance with ISO 8601. Format=YYYY-MM-DDThh:mm:ssTZD. Example: 2014-04-30T10:39:53Z;

— **Date of activation (PA004):** Date after when the property can be used;

— **Date of last change (PA005):** Date of validation of the last change request;

— **Date of revision (PA006)**;

— **Date of version (PA007)**;

— **Date of deactivation (PA008):** Date when property becomes obsolete. The property is maintained in the dictionary;

— **Version number (PA009):** Enables tracking of major changes;

— **Revision number (PA010):** Enables tracking of minor changes. If the version number changes, the revision number starts again at 1. Examples: new translation, changes of typos;

— **List of replaced properties (PA011):** Identifier of the replaced property (or properties). List of GUIDs;

— **List of replacing properties (PA012):** Identifier of the replacing property (or properties). List of GUIDs;

— **Deprecation explanation (PA013):** Reason of deprecation. Deprecated may indicate the property will be removed in the future. This explanation shall be written in international English (EN).


© ISO 2023 – All rights reserved
Documents
Document Sharing Hub
Full document details: ISO_TS 7127_2023

## 5 Properties for lighting systems

In Table 1 the mechanical properties of a lighting system are described. Figure 1 shows the orientation of a luminaire in the ($C$, $\gamma$) coordinate system according to CIE 121:1996 to clarify the location relationship.

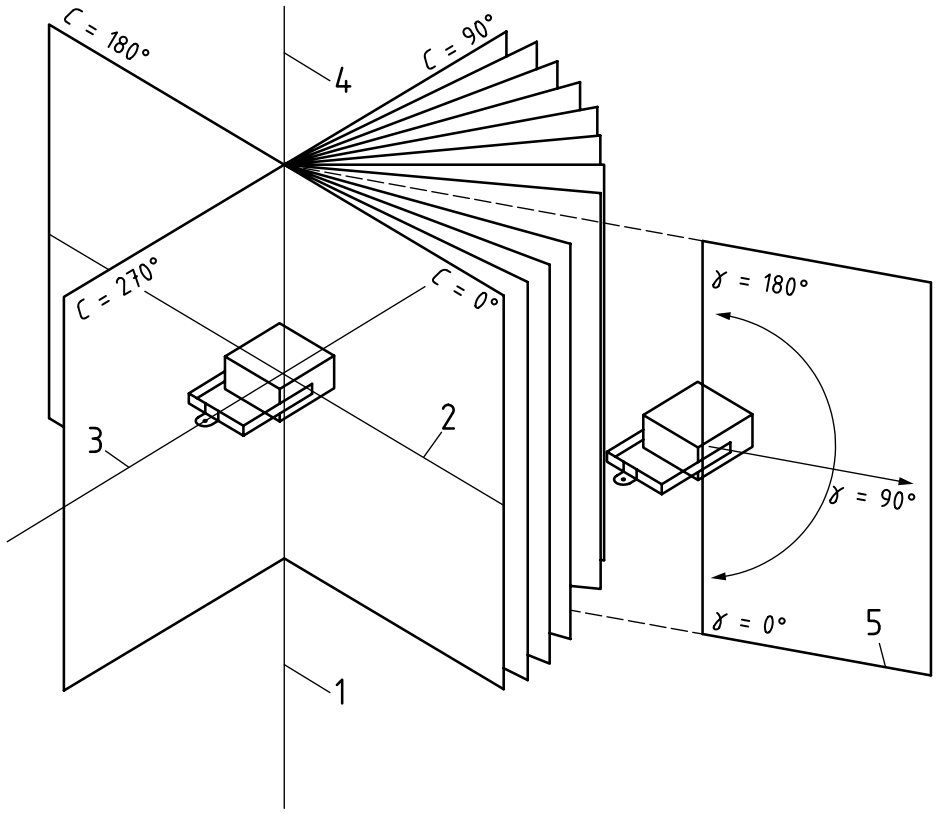


**Key**

1 first axis of luminaire

2 second axis of luminaire

3 third axis of luminaire

4 polar axis of photometer

5 C half plane

**Figure 1 — Orientation of a luminaire in the ($C$, $\gamma$) coordinate system according to CIE 121:1996; first axis of luminaire ($\gamma$) is in the IES LM-63-19, the vertical or the z-axis; second axis of luminaire (C0-C180) is in the IES LM-63-19, the 0° horizontal or the x-axis; third axis of luminaire (C90-C270) is in the IES LM-63-19, the 90° horizontal or the y-axis**

© ISO 2023 – All rights reserved

Documents
Document Sharing Hub
Full document details: ISO_TS 7127_2023

**Table 1 — Mechanical properties**

| GUID | ID | Name | Description | Symbol | Format, Unit | Value set | Examples |
|---|---|---|---|---|---|---|---|
| 2GZ1YB8enFVhD-HOKgLc$BU | 01-0001 | overall diameter | Overall diameter of the housing of the round lighting system. | | 1E0, mm | n.a. | 200 |
| 2F38RxmOf3ow-0715JRf5OO | 01-0053 | overall radius | Overall radius of the housing of the lighting system. Suitable for circular luminaires or sensing devices or segment geometry. Not suitable for ellipsoid forms. | | 1E0, mm | n.a. | 100 |
| 19Z9XKYDT-4p8HR0ZbD$wO_ | 01-0002 | overall height | Height of the housing of the lighting system. Measured over γ (Vertical). See Figure 1 – first axis of luminaire. | | 1E0, mm | n.a. | 100 |
| 1uJglYpRnFpQ4tSt-HaR2Pf | 01-0003 | overall length | Length of the housing of the lighting system. Measured in the C90-C270 plane (90° Horizontal,). See Figure 1– third axis of luminaire. | | 1E0, mm | n.a. | 1 500 |
| 1dPvrZN3vEIB0n-0vwYvDcX | 01-0004 | overall width | Width of the housing of the lighting system. Measured in the C0-C180 plane (0° Horizontal). See Figure 1– second axis of luminaire. | | 1E0, mm | n.a. | 200 |
| 1RPyGAgMf4hRTZ-0DogLFnU | 01-0005 | mass | Mass of the lighting system. Commonly used as “weight”. | | 1E-2, kg | n.a. | 1,40 |
| 2A6xVlUTj9QP-1G$qb4FiWv | 01-0006 | cut-out diameter | Diameter of the cut-out hole (for recessed or flush mount). | | 1E0, mm | n.a. | 180 |
| 1RIsLltoX1whNaYk-aCoHXJ | 01-0007 | recessed required depth | Required minimum installation depth, height of the invisible/ hidden mounting part of the luminaire (for recessed or flush mount). | | 1E0, mm | n.a. | 130 |
| 2VEYAfd7j4FQt-JgAb_riA5 | 01-0008 | cutting out length | Length of the cut-out hole (for recessed or flush mount). | | 1E0, mm | n.a. | 1 380 |
| 2pFfNBOuv1Tf_RTQpYktGL | 01-0009 | cutting out width | Width of the cut-out hole (for recessed or flush mount). | | 1E0, mm | n.a. | 175 |



© ISO 2023 – All rights reserved

Documents
Document Sharing Hub

Full document details: ISO_TS 7127_2023

**Table 1** *(continued)*

| GUID | ID | Name | Description | Symbol | Format, Unit | Value set | Examples |
|---|---|---|---|---|---|---|---|
| 1zs4Cj96j3d8TWAeeix-Jga | 01-0010 | luminaire housing shape 3D | Three-dimensional simplified shape of the lighting system. | | n.a. | Cylinder,<br>Cuboid,<br>Cube,<br>Cone,<br>Pyramid,<br>Sphere,<br>Half-Sphere,<br>User Defined | Cube |
| 1Zek8UyXfE6gToN8_RDHFg | 01-0011 | shipping weight | Weight of the shipping package of the lighting system. | | 1E-2, kg | n.a. | 2,40 |
| 1i_XY2Awj5RRadN-mgPS3yQ | 01-0012 | shipping height | Height of the packed lighting system as it is shipped. | | 1E0, mm | n.a. | 150 |
| 10UDC$GOvEHex-mf_I8j9xG | 01-0013 | shipping length | Length of the packed lighting system as it is shipped. | | 1E0, mm | n.a. | 1 650 |
| 1ybyhd8TbACg99Ox-pWMoOg | 01-0014 | shipping width | Width of the packed lighting system as it is shipped. | | 1E0, mm | n.a. | 260 |
| 0yvFhm4xvDggZv-Lzgzhiyq | 01-0015 | type of packaging | Type of packaging. Available types of packaging to be specified by the manufacturers. | | n.a. | Carton,<br>Pallet,<br>Container,<br>Without,<br>Other | Pallet |

© ISO 2023 – All rights reserved



Full document details: ISO_TS 7127_2023

AVA Documents
Document Sharing Hub

**Table 1** *(continued)*

| GUID | ID | Name | Description | Symbol | Format, Unit | Value set | Examples |
|---|---|---|---|---|---|---|---|
| 16XdmXw8T3HOIi-0TOcc8LH | 01-0016 | impact protection rating IK | Degree of protection provided by enclosures for electrical equipment against external mechanical impacts according to IEC 62262:2002 and IEC 60068-2-75:2014. | | n.a. | IK00,<br>IK01,<br>IK02,<br>IK03,<br>IK04,<br>IK05,<br>IK06,<br>IK07,<br>IK08,<br>IK09,<br>IK10 | IK 10 |
| 1LrBLaYtnCARK-perF_2Ykh | 01-0017 | glow wire resistance | The glow wire test for fire hazard according to IEC 60695-2:2014 to test electrical products, assemblies, or individual components. | | 1E0, °C | 550 °C,<br>650 °C,<br>750 °C,<br>850 °C,<br>960 °C | 750 |
| 1284Zyx8D4uR55X-2cRsWzu | 01-0018 | needle flame test | Method for testing and assessment of the fire hazard of plastic material using a needle flame according to IEC 60695-11-5:2017. “Yes” for the product has passed the test. | | n.a. | Yes<br>No | |
| 1PMNxHS2z4tRu-wiQxyzRfs | 01-0019 | number of light outputs | Number of surfaces with light output. Equals the number of positions for light distribution curves of the luminaire. | | 1E0, n.a. | n.a. | 1 |
| 1mHV_4yHLEFux-OaIDlNmNn | 01-0020 | diameter of the luminous area | *Identical with name.* | | 1E0, mm | n.a. | 190 |
| 0WXZRI6CD2KfL4x-C1uuLBF | 01-0021 | height of the luminous area | Height measured over z-axis. See Figure 1 – first axis of luminaire. | | 1E0, mm | n.a. | 4 |
| 1auIwSthrFvRTJgX-0NfO9Z | 01-0022 | length of the luminous area | Length measured aligned with the y-axis, in the C90-C270 plane. See Figure 1– third axis of luminaire. | | 1E0, mm | n.a. | 1 430 |


© ISO 2023 – All rights reserved
Full document details: ISO_TS 7127_2023
AVA Documents Document Sharing Hub

**Table 1** *(continued)*

| GUID | ID | Name | Description | Symbol | Format, Unit | Value set | Examples |
|---|---|---|---|---|---|---|---|
| 2SqBhDZKD1hBjG-WsV4q_GQ | 01-0023 | width of the luminous area | Width measured aligned with the x-axis, in the C0-C180 plane. See Figure 1– second axis of luminaire. | | 1E0, mm | n.a. | 192 |
| 2gBflnlCfCgwR3hT_QVGtQ | 01-0024 | cable length | Cable for power supply. Zero means no cable supplied. | | 1E0, mm | n.a. | 2 400 |
| 1oCak0l6v9Bew_SHOfRFnw | 01-0025 | Pliable | The luminaire body is flexible. | | n.a. | Yes<br>No | |
| 3CckyLFxX8KxZV-vgilS7Jt | 01-0026 | ground recessed accessibility class | Specific application class for ground recessed luminaires according to temperature limits, dimensions, and static load resistance in kN according to IEC 60598-2-13. | | n.a. | n.a. | In restricted accessible areas |
| 3AgJzo7ND4zB4c3y-sHuewK | 01-0054 | ground recessed luminaire static load | Static load of ground recessed luminaire according to IEC 60598-2-13. | | 1E0, kN | n.a. | 20 |
| 0f2af0EifB1Qi6x-alTs1Xn | 01-0029 | sealing material | Material of the sealing of a luminaire. | | n.a. | n.a. | |
| 0iACWRZ2HAFfY7UB-nCGjHq | 01-0057 | reflector material | Material of the reflector of a luminaire. | | n.a. | n.a. | Aluminium |
| 3jAmXEFTn9oPlBD_oO4BfE | 01-0030 | silicone-free | States whether the luminaire is silicon-free. | | n.a. | Yes<br>No | |
| 2DJLgonKH2zvtUylG-DtoL3 | 01-0031 | halogen-free | States whether the product is halogen-free according to IEC 61249-2-21:2004. | | n.a. | Yes<br>No | |
| 3IPpBFdz17PB0W-0suiESss | 01-0032 | temperature on light aperture | Average temperature of light emitting surface of a luminaire. | | 1E0, °C | n.a. | |
| 30M$RN1TX7$g-z0O8$bv0j4 | 01-0033 | operating temperature | Range defined by the minimum and maximum operating temperatures at which the luminaire operates normally as specified by the supplier or manufacturer. | | 1E0, °C | n.a. | -40<br>25 |
| 0jRoUrk2nF5QFen-nXXlBTS | 01-0034 | minimum distance | Describes the minimum required distance of the luminaire housing to other objects. | | 1E0, mm | n.a. | 50 |

© ISO 2023 – All rights reserved

Full document details: ISO_TS 7127_2023
AVA Documents
Document Sharing Hub

**Table 1** *(continued)*

| GUID | ID | Name | Description | Symbol | Format, Unit | Value set | Examples |
|---|---|---|---|---|---|---|---|
| 3GwYrPlNbAYu8g-PAOJZgwc | 01-0035 | maximum orientation angle | Maximum of possible values for the orientation angle (around the z-axis). See Figure 1 – first axis of luminaire. | | 1E0, ° | n.a. | |
| 3qn7sE55H1FuwsBo-zcktbX | 01-0036 | minimum orientation angle | Minimum possible value for the orientation angle (around the z-axis). See Figure 1 – first axis of luminaire. | | 1E0, ° | n.a. | |
| 26KAJOVBvF8gIMO-ZaAOFTV | 01-0037 | orientation angle steps | Step width for the orientation angle (around the z-axis). See Figure 1 – first axis of luminaire. | | 1E0, ° | n.a. | |
| 2NmVhTk4TFfvwDN-SYyqj$4 | 01-0038 | orientation angle default | Default value for the orientation angle (around the z-axis). See Figure 1 – first axis of luminaire. | | 1E0, ° | n.a. | |
| 0qiz0v1kLAP-BRWAW6wO1PA | 01-0039 | orientation angle selected value | Selected value for the orientation angle (around the z-axis). See Figure 1 – first axis of luminaire. | | 1E0, ° | n.a. | |
| 05nmPIM-s186u1u1s5MSd23 | 01-0040 | maximum tilt angle | Maximum possible value for the tilt angle (around the x-axis). See Figure 1– second axis of luminaire. | | 1E0, ° | n.a. | |
| 3ZWzCOV090TukLT-sY8Vcua | 01-0041 | minimum tilt angle | Minimum possible value for the tilt angle (around the x-axis). See Figure 1– second axis of luminaire. | | 1E0, ° | n.a. | |
| 0_oftQZ_jB$e1o-GoWeQWoV | 01-0042 | tilt angle steps | Step width for the tilt angle (around the x-axis). See Figure 1– second axis of luminaire. | | 1E0, ° | n.a. | |
| 0w56LObA94iv-baiikyEXf2 | 01-0043 | tilt angle default | Default value for the tilt angle (around the x-axis). See Figure 1– second axis of luminaire. | | 1E0, ° | n.a. | |
| 3VHFOw-jl13sv6CBYkwU2wh | 01-0044 | tilt angle selected value | Selected value for the tilt angle (around the x-axis). See Figure 1– second axis of luminaire. | | 1E0, ° | n.a. | |
| 3zsZztBEH9sPA-24POLsfWn | 01-0045 | maximum turn angle | Maximum possible value for the turn angle (around the y-axis). Turn can also be referred to as 'twist' or 'cant'. See Figure 1– third axis of luminaire. | | 1E0, ° | n.a. | |
| 3WFOEtzHjE2gE-wIqwNt23B | 01-0046 | minimum turn angle | Minimum possible value for the turn angle (around the y-axis). Turn can also be referred to as 'twist' or 'cant'. See Figure 1– third axis of luminaire. | | 1E0, ° | n.a. | |



© ISO 2023 – All rights reserved

Document Sharing Hub

Full document details: ISO_TS 7127_2023

**Table 1** *(continued)*

| GUID | ID | Name | Description | Symbol | Format, Unit | Value set | Examples |
|---|---|---|---|---|---|---|---|
| 1S1uI1ho-b0OAsYAUDvnB5e | 01-0047 | turn angle steps | Step width for the turn angle (around the y-axis). Turn can also be referred to as 'twist' or 'cant'. See Figure 1– third axis of luminaire. | | 1E0, ° | n.a. | |
| 0Y3iFNJcH3Xh_0Ax-e6FRZy | 01-0048 | turn angle default | Default value for the turn angle (around the y-axis). Turn can also be referred to as 'twist' or 'cant'. See Figure 1– third axis of luminaire. | | 1E0, ° | n.a. | |
| 0HKPlHCMX-FOOmtqPiFpiwZ | 01-0049 | turn angle selected value | Selected value for the turn angle (around the y-axis). Turn can also be referred to as 'twist' or 'cant'. See Figure 1– third axis of luminaire. | | 1E0, ° | n.a. | |
| 3ejPldyc9Bau-0HaTHZMtva | 01-0050 | 3D model file | The description of a location of the 3D model file. | | n.a. | n.a. | C:\,<br>URL |
| 3p1kEeiDL4i8RySiT-GkUyU | 01-0051 | cable inlet | Cable inlet, type and count, free description | | n.a. | n.a. | 2xPG13.5 |
| 0fa4jPy7f3KhEr-An_5SUg7 | 01-0052 | flush mounting box | Mechanical device to get the luminaire or sensor mounted into concrete. | | n.a. | n.a. | |
| 2hXE7M6N9DYec$I-ZwiY3ia | 01-0058 | suspension height | Distance from ceiling to mounting point of the suspended lighting system. | | 1E0, mm | n.a. | 500 |

© ISO 2023 – All rights reserved



Full document details: ISO_TS 7127_2023

AVA Documents
Document Sharing Hub

**Table 2 — Electrical properties**

| GUID | ID | Name | Description | Symbol | Format, Unit | Value set | Examples |
|---|---|---|---|---|---|---|---|
| 2FA0ih18LF_uK-t46e5ErIv | 02-0001 | apparent power | Apparent Power of the product according to IEC 60050. | *S* | 1E0, VA | n.a. | |
| 17a067965Cqh-DelQ$Y3mcP | 02-0002 | rated input power | Input power consumed by the light source(s), control gear and control circuit in or associated with a luminaire including any standby power when the luminaire is turned on. | | 1E0, W | n.a. | |
| 3LBrQkLDDFheBOx-rGk8Zr_ | 02-0003 | power factor | Under periodic conditions, ratio of the absolute value of the active power P to the apparent power S. See also IEC 80000-6:2008. | $\lambda$ | 1E0, n.a. | n.a. | 0,92 |
| 0zjByQSTX24wsx-TI25Lzj$ | 02-0004 | dimming table / curve | Consumption of the power corresponding to the dim level of the luminaire. It is presented as a table of power (W) related to the luminous flux emitted (lm) or the percentage of dimming (%). | | 1E-2, W<br>1E0, lm OR<br>1E0, % | n.a. | |
| 3krkQTVbv0$g9X-j9eYC6nh | 02-0005 | compensation type | Identifies the form of compensation used for power factor correction and radio interference suppression. | | n.a. | Capacitive,<br>Inductive,<br>Other | |
| 0TzE4sMDv1pwfyg-K1xxjm5 | 02-0006 | standby power / networked standby power | Power consumption of luminaire in off mode, or in non-active mode. All electrical components including emergency and lighting controls components have to be considered. See also ISO/CIE 20086:2019 and IEC 63013:2017+A1:2021. | | 1E-2, W | n.a. | 0,35 |
| 2wiaN2gSf0$RFeAF-8d_51K | 02-0007 | power consumption of the controls | Power consumption of the detector with the light switched off and without motion detection/presence detection (idle state). | | 1E-2, W | n.a. | 0,20 |
| 0G4TAennPD5gzRo-G2rlZv_ | 02-0008 | ILCOS light source type | Light Source type definition according ILCOS, IEC 61231:2010. | | n.a. | n.a. | IAA/<br>C-40-220/<br>230-E27-60 |



© ISO 2023 – All rights reserved

Documents
Document Sharing Hub

Full document details: ISO_TS 7127_2023

**Table 2** *(continued)*

| GUID | ID | Name | Description | Symbol | Format, Unit | Value set | Examples |
|---|---|---|---|---|---|---|---|
| 1fBDdf6YP2O8_JFT-CLHktp | 02-0009 | lamp holder | A device which mechanically supports and provides electrical connections for a compatible electric light source. See also IEC 60061:2018. | | n.a. | n.a. | E27 |
| 1MkMercePCOufl-c6OyDPFq | 02-0071 | luminaire socket | Connector and mechanical holder for accessories, LED, control or other modules | | n.a. | n.a. | GH76p-2,<br>zhaga book18,<br>zhaga book20,<br>NEMA |
| 1nVrfHKzD-0TOacgThVW99r | 02-0076 | luminaire socket interface | Electrical interface on contact of socket. | | n.a. | n.a. | D4i,<br>DALI,<br>0-10V,<br>1-10V,<br>PWM |
| 1nKr7A75b8reM-NAfPW1iw1 | 02-0010 | nominal light source output power | Approximate power output used to designate or identify the light source. | | 1E0, W | n.a. | 60,<br>49,<br>80 |
| 1A3s$Z4Sj7jQFfzb-fen7Yu | 02-0011 | multilamp light source wattage | Luminaires that could be equipped with more than one light source wattage. Selection of all possible nominal light source output wattage. | | 1E0, W | n.a. | 35,<br>49,<br>80 |
| 018C_3ZRn5Iuf-wY89oB9NV | 02-0012 | light source included | States whether the luminaire is supplied with light source. | | n.a. | Yes<br>No | Yes |
| 2LJHyobk57buK-gQhTXFfR_ | 02-0013 | maximum nominal output power of light source | *Identical with name.* | | 1E0, W | n.a. | 20 |
| 1RGMcZL0X4SvX-P9H1tpT7e | 02-0014 | default light source power | Recommended light source power by supplier or manufacturer. | | 1E0, W | n.a. | 18 |
| 1ELEjwitTB-1ANPTqofV2Tl | 02-0015 | light source position of usage | Light Source usage position (Horizontal/Vertical) possibly with range of angle. | | n.a. | Horizontal,<br>Vertical | Horizontal |
| 2UOOchRyr2eQDX-bAwecx5 | 02-0016 | light source count | Number of electric lamps (electric light source provided with at least one cap) in one luminaire. | | 1E0, n.a. | n.a. | 2 |

© ISO 2023 – All rights reserved

Document Sharing Hub
Full document details: ISO_TS 7127_2023

**Table 2** *(continued)*

| GUID | ID | Name | Description | Symbol | Format, Unit | Value set | Examples |
|---|---|---|---|---|---|---|---|
| 0FWc9hC5PEqgfN-0fVzc2Yo | 02-0017 | zhaga standard | Is the luminaire compliant with Zhaga, and if so state which Zhaga Books apply. See also PD IEC/PAS 63166. | | n.a. | n.a. | |
| 21GF1lrRP4denY-C8o6ot$N | 02-0018 | control gear | Type of control gear, which is required to control the electrical operation of the light source(s). | | n.a. | n.a. | electromagnetic,<br>electronic, electronic for LEDs, constant wattage, multi-channel |
| 06Vbbmtwv85QA-rFTsBPUPQ | 02-0019 | control gear required | States if control gear is necessary. | | n.a. | Yes<br>No | |
| 3kZ3CJ9Xb9DBPoZ-15k3vIQ | 02-0020 | control gear included | Shipped with or without control gear/drivers. | | n.a. | Yes<br>No | Yes |
| 2mGS7VdXfBo8r-V8OFHuW7b | 02-0021 | control gear quantity | The quantity of control gears. | | 1E0, n.a. | n.a. | 1 |
| 3M6mU$FIP-6KQ80BVaK5PCO | 02-0022 | control gear location | Describes the location of the control gear: inside or outside of the luminaire or provide the distance to the light source. | | n.a. | n.a. | |
| 3d9jfSb_z7WB2y0x-bHeccR | 02-0023 | energy efficiency of control gear | IEC 62442-1:2018 defines the measurement methods for the total input power of the lighting system. | | 1E-2 | | 0,86 |
| 2oaQ3AOnn40w-mt6Zfp6ooy | 02-0024 | rated current | Electrical rated current according to IEC 60669-1. | *I* | 1E0, A | n.a. | |
| 3rfirTJfj9bgIELSX-4VRBz | 02-0025 | inrush current | Initial current after turning on. Base for quantity of luminaires per fuse or similar. | | 1E-2, A | n.a. | |
| 2ENV$TQoL31gD-SHIZzyR4N | 02-0026 | inrush current time | Inrush current time after turning on. | | 1E0, µs | n.a. | |



© ISO 2023 – All rights reserved

Documents
Document Sharing Hub

Full document details: ISO_TS 7127_2023

**Table 2** *(continued)*

| GUID | ID | Name | Description | Symbol | Format, Unit | Value set | Examples |
|---|---|---|---|---|---|---|---|
| 22IpUkOwD2i-OIVugd8CAfb | 02-0027 | rated frequency | Rated frequency at which the product operates normally as specified by the supplier or manufacturer. See IEC 61293:2019. | | 1E0, Hz | 50,<br>60,<br>0<br>*multiple option selection* | |
| 3ERn8VgnjDjhulH-3MaG9yG | 02-0028 | supply voltage | The phase-to-phase or phase-to-neutral voltage at the supply terminals at which the product operates normally as specified by the supplier or manufacturer. See IEC 60038. | | 1E0, V | n.a. | 230 |
| 3$$yIxYFj1E9zX-dzpVaCgt | 02-0066 | rated voltage | The voltage or range of voltages indicated on the luminaire according to IEC 60598-1:2020. | | 1E0, V | n.a. | |
| 3bHsk$G7n-05BgiaYUYUg6s | 02-0067 | 2nd rated voltage | Rated output voltage on the secondary side (in the case of lighting using a voltage converter) according to IEC 61347 series. | | 1E0, V | n.a. | |
| 3RRkslNcn3IBF-myVoAyyMc | 02-0029 | voltage type | AC Alternating Current/DC Direct Current/UC Universal Current (Alternating or Direct Current). | | n.a. | AC,<br>DC,<br>UC | |
| 0Ias3th8D2c-g4EvP$KqQcv | 02-0030 | electrical safety class | Indicates whether the electrical device has a protective earth connection or not. See IEC 61140:2015. | | n.a. | 0,<br>I,<br>II,<br>III | I |

© ISO 2023 – All rights reserved

Full document details: ISO_TS 7127_2023