AEROSPACE STANDARD	AS20620™ - AS20639™	ISSUE 9
	Issued 1969-07 Revised 2004-09	

Nut, Self-Locking, Extended Washer Double Hexagon

NOTE: The issue status of this document remains unchanged as there have been no changes to the technical content.

SAE INDUSTRY TECHNOLOGIES CONSORTIA AEROSPACE STANDARDS AND PART QUALIFICATION PROGRAM

FOREWORD

On the 1st January 2015 the SAE Industry Technologies Consortia (SAE ITC) acquired the ADS Aerospace Standards, previously known as the Society of British Aerospace Companies (SBAC) Aerospace Standards. The SAE ITC established in 2003 operates as a trade association as part of the SAE International Enterprise providing a unique framework serving the automotive, aerospace, and commercial vehicle sectors. Clients include private companies, government agencies, individuals, and trade associations. Building consensus and breakthrough barriers to achieve solutions, and the ways by which those solutions take shape, are tailored to each client's individual needs.

The legal obligations and copyright authority of all Aerospace Standards that were issued by the ADS Group Limited are therefore assigned / transferred to the SAE ITC.

These Standards are produced by the SAE ITC with the assistance of, and for the benefit of the Aerospace Industry, as part of a continuous programme of Standardisation for Aerospace application under the control of the Technical Standards Committee (TSC) of the SAE ITC.

SAE ITC Standards are published as part of the series of SAE ITC Aerospace Industry Standards, and where appropriate, additional manufacturing and inspection requirements are issued as Reference Sheets (RS) or Technical Specifications (TS). It is the responsibility of those using or specifying a Standard to ensure the product, process, or manufacturer so used or specified, is appropriate for the task or role in question. The SAE ITC wishes to draw special attention to the fact Technical Specifications (TS) include testing and procedures by which a user or Design Authority can establish whether a particular manufacturer, prima facie, has the capability to produce hardware in accordance with the appropriate standards and related specifications.

The SAE ITC, its servants, or representatives accept no responsibility for the continued quality of hardware items produced against the relevant drawings and specifications; this responsibility remains with the user.

Whilst the SAE ITC takes all reasonable care in the preparation of its Standards, neither the SAE ITC, its officers, employees, servants, agents, or representatives, shall have any responsibility or liability whatsoever with respect to any act or omission (whether negligent or not) of whatsoever nature, or in connection with the preparation of the Standards or any part thereof. These responsibilities are those of the user or Design Authority. Users of SAE ITC Standards agree that any such liability on the part of the SAE ITC is excluded to the maximum extent permitted by law. SAE ITC Standards may be changed from time to time, and both users and manufacturers of these parts should ensure they are in possession of the latest issue of the Standards and supporting documentation before adoption or the commencement of production.

It is recommended that Technical Specification TS260, Metallic Materials List of Alternative Material Standards, be consulted prior to manufacture of SAE ITC products.

Each Standard is a facsimile or electronic reproduction of a master drawing and, therefore, any outline view scales stated are not necessarily reproduced accurately. A Master Index of all SAE ITC Aerospace Standards is published separately on the SAE ITC website.

All references to Standards include reference to RS and TS publications.

Details of this and any further information can be obtained from the SAE ITC.

SAE Industry Technologies Consortia provides that "This standard is published by SAE ITC to advance the state of technical and engineering sciences. The use of this standard is entirely voluntary and its applicability and suitability for any particular use, including any patent infringement arising therefrom, is the sole responsibility of the user."

Copyright © 2015 SAE ITC.

All rights reserved. No part of this publication may be reproduced, stored in a retrieval system or transmitted, in any form or by any means, electronic, mechanical, photocopying, recording or otherwise, without prior written permission of SAE ITC.

TO PLACE A DOCUMENT ORDER: **Tel: 877-606-7323 (inside USA and Canada)**
Tel: +1 724-772-7545 (outside USA)
Fax: 724-776-0790
Email: CustomerService@sae.org
http://itc.sae.org/

Documents
Document Sharing Hub

Copyright SAE ITC Aerospace Industry Standards
Provided by IHS Markit under license with SAE-ITC
No reproduction or networking permitted without license from IHS
Licensee=/, User=,
Not for Resale,
Full document details: ITC AS20620-639 2004

SOCIETY OF BRITISH AEROSPACE COMPANIES STANDARD

NUT, SELF LOCKING, EXTENDED WASHER DOUBLE HEXAGON	AS20620 THRU 639 SHEET 1 OF 2

3RD ANGLE PROJECTION	SHEET No	1	2					
	ISSUE	9	9					
	DATE	SEPT 04	SEPT 04					

DIMENSIONS **S** AND **X** APPLIES PRIOR TO LOCKING ELEMENT DEFORMATION.

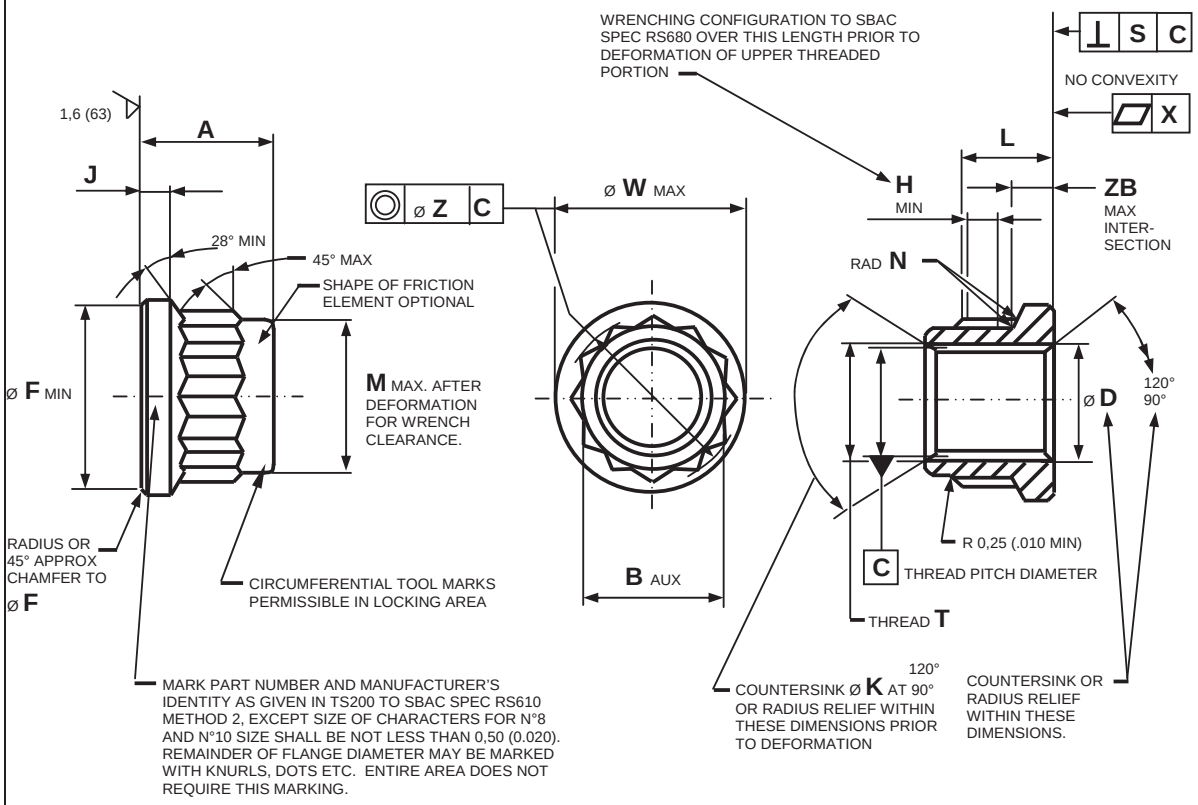

1. **PERFORMANCE** :- TS8
2. **MATERIALS** :- CORROSION RESISTANT STEEL BS HR650 or AMS5737
3. **FINISH** :- SILVER COAT TO EN2786, AM2411 OR DTD939, COATING THICKNESS 0,005 (0.0002) to 0,015 (0.0006). ON NUTS 0.250 AND LARGER, THE COATING THICKNESS SHALL NOT BE LESS THAN 0,005 (0.0002) MEASURED AT THE PITCH DIAMETER. 0.190 NUTS SHALL SHOW COMPLETE COATING COVERAGE ON THE THREADS.
4. DIMENSIONS & TOLERANCES, EXCEPT FOR THREADS ARE IN MILLIMETRES, INCH CONVERSIONS ARE IN PARENTHESES. ALL DIMENSIONS APPLY AFTER COATING.
5. BREAK SHARP EDGES 0,06 (0.003) TO 0,38 (0.015) UNLESS OTHERWISE SPECIFIED.
6. **SURFACE TEXTURE** :- BS1134, ALL UNSPECIFIED SURFACES 3,2 MICROMETRES (125 MICROINCHES).
7. **SCREW THREADS** :- ISO 3161 (SAE AS 8879)
8. CRACK TEST TO BS M39 BEFORE COATING.
9. FOR QUALIFIED MANUFACTURERS SEE TS200.
10. DRAWING PRACTICE TO TS66
11. DO NOT USE UNASSIGNED PART NUMBERS.
12. **APPLICATION** :
    (i) UPPER THREAD PORTION DEFORMED TO DEVELOP SPECIFIED LOCKING TORQUE WHEN USED ON STANDARD CLASS 3A UNIFIED THREADS, AND ALSO ON UNIFIED THREADS REDUCED .001 FOR .164 SIZE ONLY AND .003 FOR .190 SIZES AND ABOVE ON MAJOR, PITCH AND MINOR DIAMETERS.
    (ii) THESE NUTS ARE DESIGNED TO DEVELOP THE TENSILE STRENGTHS SPECIFIED ON SHEET 2 WHEN USED WITH 1100 MPa (160,000 lbf/in²) BOLTS AT ROOM TEMPERATURE.

THESE PARTS REQUIRE QUALIFICATION – REFER TO TS202

RS AND TS ARE SBAC PUBLICATIONS.
BS ARE BRITISH STANDARD INSTITUTION PUBLICATIONS.
DTD ARE MINISTRY OF DEFENCE (PROCUREMENT EXECUTIVE) PUBLICATIONS.
SAE AS AND AMS ARE SOCIETY OF AUTOMOTIVE ENGINEERING INC., USA, PUBLICATIONS.
EN ARE AECMA PUBLICATIONS

PREPARED BY THE SOCIETY OF BRITISH AEROSPACE COMPANIES LTD — TECHNICAL STANDARDS GROUP

PRINTED IN ENGLAND
ISSUED IN ACCORDANCE WITH THE TERMS OF THE FORWORD TO SBAC AEROSPACE INDUSTRY STANDARDS
ORIGINAL PAPER SIZE ISO A4 210 x 297 mm
REVISION : ISSUE 9 September 2004
APPROVAL DATE: 14.07.1969

THE SOCIETY OF BRITISH AEROSPACE COMPANIES LTD (Registered in England and Wales no. 143447) © 1969

Documents
Document Sharing Hub

Copyright SAE ITC Aerospace Industry Standards
Provided by IHS Markit under license with SAE-ITC
No reproduction or networking permitted without license from IHS
Licensee=/, User=,
Not for Resale,
Full document details: ITC AS20620-639 2004