INTERNATIONAL TELECOMMUNICATION UNION

ITU-T G.709.1/Y.1331.1

(06/2018)

TELECOMMUNICATION
STANDARDIZATION SECTOR
OF ITU

SERIES G: TRANSMISSION SYSTEMS AND MEDIA, DIGITAL SYSTEMS AND NETWORKS

Digital terminal equipments – General

SERIES Y: GLOBAL INFORMATION INFRASTRUCTURE, INTERNET PROTOCOL ASPECTS, NEXT-GENERATION NETWORKS, INTERNET OF THINGS AND SMART CITIES

Internet protocol aspects – Transport

Flexible OTN short-reach interfaces

CAUTION !

PREPUBLISHED RECOMMENDATION

This prepublication is an unedited version of a recently approved Recommendation. It will be replaced by the published version after editing. Therefore, there will be differences between this prepublication and the published version.

--`,,```,,,,````-`-`,,`,,`,`,,`---

Documents
Document Sharing Hub

Copyright International Telecommunication Union/ITU Telcommunication Sector
Provided by IHS Markit under license with ITU-T
No reproduction or networking permitted without license from IHS
Full document details: ITU-T G.709.1 2018

Licensee=/, User=,
Not for Resale,

FOREWORD

The International Telecommunication Union (ITU) is the United Nations specialized agency in the field of telecommunications, information and communication technologies (ICTs). The ITU Telecommunication Standardization Sector (ITU-T) is a permanent organ of ITU. ITU-T is responsible for studying technical, operating and tariff questions and issuing Recommendations on them with a view to standardizing telecommunications on a worldwide basis.

The World Telecommunication Standardization Assembly (WTSA), which meets every four years, establishes the topics for study by the ITU-T study groups which, in turn, produce Recommendations on these topics.

The approval of ITU-T Recommendations is covered by the procedure laid down in WTSA Resolution 1.

In some areas of information technology which fall within ITU-T's purview, the necessary standards are prepared on a collaborative basis with ISO and IEC.

NOTE

In this Recommendation, the expression "Administration" is used for conciseness to indicate both a telecommunication administration and a recognized operating agency.

Compliance with this Recommendation is voluntary. However, the Recommendation may contain certain mandatory provisions (to ensure, e.g., interoperability or applicability) and compliance with the Recommendation is achieved when all of these mandatory provisions are met. The words "shall" or some other obligatory language such as "must" and the negative equivalents are used to express requirements. The use of such words does not suggest that compliance with the Recommendation is required of any party.

INTELLECTUAL PROPERTY RIGHTS

ITU draws attention to the possibility that the practice or implementation of this Recommendation may involve the use of a claimed Intellectual Property Right. ITU takes no position concerning the evidence, validity or applicability of claimed Intellectual Property Rights, whether asserted by ITU members or others outside of the Recommendation development process.

As of the date of approval of this Recommendation, ITU [had/had not] received notice of intellectual property, protected by patents, which may be required to implement this Recommendation. However, implementers are cautioned that this may not represent the latest information and are therefore strongly urged to consult the TSB patent database at http://www.itu.int/ITU-T/ipr/.

© ITU 2018

All rights reserved. No part of this publication may be reproduced, by any means whatsoever, without the prior written permission of ITU.

Documents
Document Sharing Hub

Copyright International Telecommunication Union/ITU Telcommunication Sector
Provided by IHS Markit under license with ITU-T
No reproduction or networking permitted without license from IHS
Licensee=/, User=,
Not for Resale,
Full document details: ITU-T G.709.1 2018

Recommendation ITU-T G.709.1/Y.1331.1

Flexible OTN short-reach interfaces

Summary

This Recommendation specifies a set of flexible interoperable short-reach OTN interface over which an OTUCn (n ≥ 1) is transferred, using bonded interfaces. The Recommendation defines the frame structure for FlexO using the RS(544,514) FEC.

Keywords:

FlexO, OTN, FEC, short-reach

Documents
Document Sharing Hub

Copyright International Telecommunication Union/ITU Telcommunication Sector
Provided by IHS Markit under license with ITU-T
No reproduction or networking permitted without license from IHS
Licensee=/, User=,
Not for Resale,
Full document details: ITU-T G.709.1 2018

Recommendation ITU-T G.709.1/Y.1331.1

Flexible OTN short-reach interfaces

1 Scope

This Recommendation specifies a set of flexible-bandwidth interoperable short-reach OTN interfaces, so called FlexO-x-RS-m interface group, over which an aggregate OTUCn ($n \geq 1$) can be transferred using bonded FlexO short-reach interfaces as lower bandwidth elements.

The types of FlexO short-reach interfaces that can serve as FlexO-x-RS-m group members are covered by application codes which are at the time of publication 4I1-9D1F, 4L1-9C1F, C4S1-9D1F, 4L1-9D1F, C4S1-4D1F, 8R1-4D1F, 4I1-4D1F and 8I1-4D1F in [ITU-T G.695] and [ITU-T G.959.1].

The definition of a FlexO-x-RS interface group complements the existing B100G functions specified in [ITU-T G.709], such as OTUCn frame, ODUk/flex, with new functions such as physical interface bonding, FEC coding, group management and OTUCn (de)mapping.

This FlexO-x-RS Recommendation complements [ITU-T G.709]/[ITU-T G.798] and provides specifications for new functions that are specific to the processing of FlexO-x-RS-m interface group. In addition, some introduction material for the addressed application is included.

2 References

The following ITU-T Recommendations and other references contain provisions which, through reference in this text, constitute provisions of this Recommendation. At the time of publication, the editions indicated were valid. All Recommendations and other references are subject to revision; users of this Recommendation are therefore encouraged to investigate the possibility of applying the most recent edition of the Recommendations and other references listed below. A list of the currently valid ITU-T Recommendations is regularly published. The reference to a document within this Recommendation does not give it, as a stand-alone document, the status of a Recommendation.

[ITU-T G.695] Recommendation ITU-T G.695 (2018), *Optical interfaces for coarse wavelength division multiplexing applications.*

[ITU-T G.709] Recommendation ITU-T G.709/Y.1331 (2016), *Interfaces for the optical transport network.*

[ITU-T G.798] Recommendation ITU-T G.798 (2017), *Characteristics of optical transport network hierarchy equipment functional blocks.*

[ITU-T G.870] Recommendation ITU-T G.870/Y.1352 (2016), *Terms and definitions for optical transport networks (OTN).*

[ITU-T G.872] Recommendation ITU-T G.872 (2017), *Terms and definitions for optical transport networks*.

[ITU-T G.959.1] Recommendation ITU-T G.959.1 (2018), *Optical transport network physical layer interfaces.*

[ITU-T G.7041] Recommendation ITU-T G.7041/Y.1303 (2016), *Generic framing procedure (GFP).*

[ITU-T G.8260] Recommendation ITU-T G.8260 (2015), *Definitions and terminology for synchronization in packet networks.*

[IEEE 802.3] IEEE Std. 802.3:2015, *IEEE Standard for Information Technology – Telecommunications and Information Exchange Between Systems – Local and*

Documents
Document Sharing Hub

Copyright International Telecommunication Union/ITU Telcommunication Sector
Provided by IHS Markit under license with ITU-T
No reproduction or networking permitted without license from IHS
Licensee=/, User=,
Not for Resale,
Full document details: ITU-T G.709.1 2018

Metropolitan Area Networks – Specific Requirements Part 3: Carrier Sense Multiple Access With Collision Detection (CSMA/CD) Access Method and Physical Layer Specifications.

[IEEE 802.3bs] IEEE Std 802.3bs-2017, IEEE *Standard for Ethernet Amendment 10: Media Access Control Parameters, Physical Layers and Management Parameters for 200 Gb/s and 400 Gb/s Operation*.

[OIF FlexE] Optical Interworking Forum, OIF (2017), *FlexEthernet Implementation Agreement 1.1*.

3 Definitions

3.1 Terms defined elsewhere

This Recommendation uses the following term defined elsewhere:

3.1.1 Terms defined in [ITU-T G.870]

– completely standardized OTUCn (OTUCn)

– optical data unit (ODUCn)

– optical payload unit (OPUCn)

– optical transport network (OTN)

3.2 Terms defined in this Recommendation

This Recommendation defines the following terms:

3.2.1 FlexO: Information structure with a specific bit rate and frame format, consisting of overhead and payload, intended to be used in a group with n ($n \geq 1$) instances for the transport of an OTUCn signal.

3.2.2 FlexO-x: Information structure consisting of x ($x \geq 1$) 10-bit interleaved FlexO instances, intended to be used in a group with m ($m = \lceil n/x \rceil$) instances for the transport of an OTUCn signal. The order x signifies the FlexO-x interface rate in units of 100G. Specific variants are 100G FlexO-1, 200G FlexO-2, and 400G FlexO-4.

3.2.3 FlexO-x-RS: Information structure consisting of a FlexO-x plus Reed-Solomon FEC parity.

3.2.4 FlexO-x-RS interface: Refers to an individual member interface that is part of a FlexO-x-RS-m interface group.

NOTE – The terms “member” and “PHY” are often used to refer to a FlexO-x interface.

3.2.5 FlexO-x-RS-m interface group: Refers to the group of m * FlexO-x-RS interfaces.

NOTE – The text may use “FlexO group” as short-hand for FlexO interface group.

3.2.6 FOICx.k-RS: Refers to a FlexO-x-RS interface using k parallel FOICx.k-RS lanes.

NOTE – “FOICx.k” is the FlexO equivalent of “OTLk.m” for OTUk as defined in [ITU-T G.709].

3.2.7 FOICx.k-RS lane: Refers to an electrical/optical lane of a FlexO-x-RS interface.

4 Abbreviations and acronyms

This Recommendation uses the following abbreviations and acronyms:

AM Alignment Marker

B100G Beyond 100G

Documents
Document Sharing Hub
Copyright International Telecommunication Union/ITU Telcommunication Sector
Provided by IHS Markit under license with ITU-T
No reproduction or networking permitted without license from IHS
Licensee=/, User=,
Not for Resale,
Full document details: ITU-T G.709.1 2018

BMP Bit-synchronous Mapping Procedure

CAUI (Chip to) 100 Gb/s Attachment Unit Interface

CFP2 C (100G) Form-factor Pluggable Optical Module

CM Common Marker

CRC Cyclic Redundancy Check

FA Frame Alignment

FAS Frame Alignment Signal

FCC FlexO Communications Channel

FEC Forward Error Correction

FlexE Flexible Ethernet

FlexO Flexible Optical Transport Network

FOIC-RS FlexO-x-RS Interface

GFP Generic Framing Procedure

GID Group Identification

IA Implementation Agreement

LSB Least Significant Bit

MAP PHY Map field

MFAS Multi-Frame Alignment Signal

MS Multiplexed Section

MSB Most Significant Bit

ODU Optical Data Unit

OH Overhead

OPU Optical Payload Unit

OSMC OTN synchronization messaging channel

OTL Optical Transport Lane

OTN Optical Transport Network

OTU Optical Transport Unit

PCS Physical Coding Sublayer

PHY Physical Layer

PID Physical Identification

PTP Precise Timing Protocol

QSFP28 Quad (100G) Small Form-factor Pluggable

RES Reserved for future international standardization

RPF Remote Physical Layer Fault

RS Reed-Solomon

SM Section Monitoring

SSM Synchronization Status Message

Documents
Document Sharing Hub
Copyright International Telecommunication Union/ITU Telcommunication Sector
Provided by IHS Markit under license with ITU-T
No reproduction or networking permitted without license from IHS
Licensee=/, User=,
Not for Resale,
Full document details: ITU-T G.709.1 2018

STAT Status

UM Unique Marker

UP Unique Padding

5 Conventions

This Recommendation uses the following conventions defined in [ITU-T G.870]:

– k

– Cn

– m

– n

– r

Transmission order: The order of transmission of information in all the diagrams in this Recommendation is first from left to right and then from top to bottom. Within each byte the most significant bit is transmitted first. The most significant bit (bit 1) is illustrated on the left side of all diagrams.

Value of reserved bit(s): The value of an overhead bit, which is reserved for future international standardization, shall be set to "0".

Value of non-sourced bit(s): Unless stated otherwise, any non-sourced bits shall be set to "0".

6 Introduction and applications

A FlexO-x-RS-m (Flexible OTN short reach) interface group is defined for interoperable multi-vendor applications. It complements B100G (beyond 100G) [ITU-T G.709] Edition 5, by providing an interoperable interface for OTUCn transport signals. A FlexO-x-RS-m interface group provides modularity by bonding standard-rate interfaces (e.g., m * 100G), over which the OTUCn ($n \geq 1$) signal is adapted. The value of m is not standardized. The specification of OTUCn in [ITU-T G.709] excludes interface specific functions such as FEC, scrambling, and bit alignment. A FlexO-x-RS interface or a FlexO-x-RS-m group wraps OTUCn, abstracting the transport signal from the interface. FlexO-x-RS-m enables ODUflex services >100Gbit/s to be supported across multiple interfaces, ahead of next-gen interface standards (e.g., 400GE [IEEE 802.3bs]).

FlexO-x-RS provides OTN interfaces with comparable functionality as to what was introduced in [OIF FlexE] for Ethernet interfaces.

Example applications are provided in Appendix I.

6.1 FlexO-x-RS-m interface group considerations

The considerations and capabilities for a FlexO-x-RS-m interface group:

– provides an interoperable system interface for OTUCn transport signals;

– enables higher capacity ODUflex and OTUCn, by means of bonding m standard-rate interfaces;

– provides interface rate modularity and flexibility;

– provides a frame, alignment, deskew, group management, management communication channel, and such functions that are not associated with the OTUCn transport signal; and

– reuses 100G modules (e.g., CFP2, QSFP28) by matching the interface rate to OTU4 as specified in [ITU-T G.709]

Documents
Document Sharing Hub
Copyright International Telecommunication Union/ITU Telcommunication Sector
Provided by IHS Markit under license with ITU-T
No reproduction or networking permitted without license from IHS
Licensee=/, User=,
Not for Resale,
Full document details: ITU-T G.709.1 2018

The rate-specific FlexO-x-RS interfaces specified in this recommendation are located at a system external reference point.

NOTE – The logical signal format FOICx.k-RS can be reused on a system internal interface (module framer interface). Related requirements and any optimizations to the FlexO-x-RS-m groups when used as intra-system interface (e.g., lower latency by removing FEC) are beyond the scope of this recommendation and covered in [b-ITU-T G-Sup.58].

7 Structure and processes

This clause introduces the functions associated with a FlexO-x-RS interface group and the basic signal structure, processes and atomic functions.

7.1 Basic signal structure

The FlexO-x-RS-m interface group in this recommendation is only specified for short-reach applications. The FlexO-x-RS-m interface group functional model is specified in [ITU-T G.872]. The physical optical interface specifications are beyond the scope of this recommendation.

The information structure for FlexO-x-RS-m interface group is represented by information containment relationships and flows. The principal information containment relationship is described in Figure 7-1.

One OTUCn signal is mapped into n FlexO signals, each FlexO signal containing one OTUC instance. The n FlexO instances are mapped into m ($m \leq n$) FlexO-x-RS interfaces, each FlexO-x-RS interface containing one FlexO instance or multiple, interleaved FlexO instances plus FEC. Each FlexO-x-RS interface is split into k FlexO-x-RS lane signals. Each lane signal is modulated onto one OTSi and the k OTSi's are transported as an OTSiG via one media element.

Documents
Document Sharing Hub
Copyright International Telecommunication Union/ITU Telcommunication Sector
Provided by IHS Markit under license with ITU-T
No reproduction or networking permitted without license from IHS
Licensee=/, User=,
Not for Resale,
Full document details: ITU-T G.709.1 2018

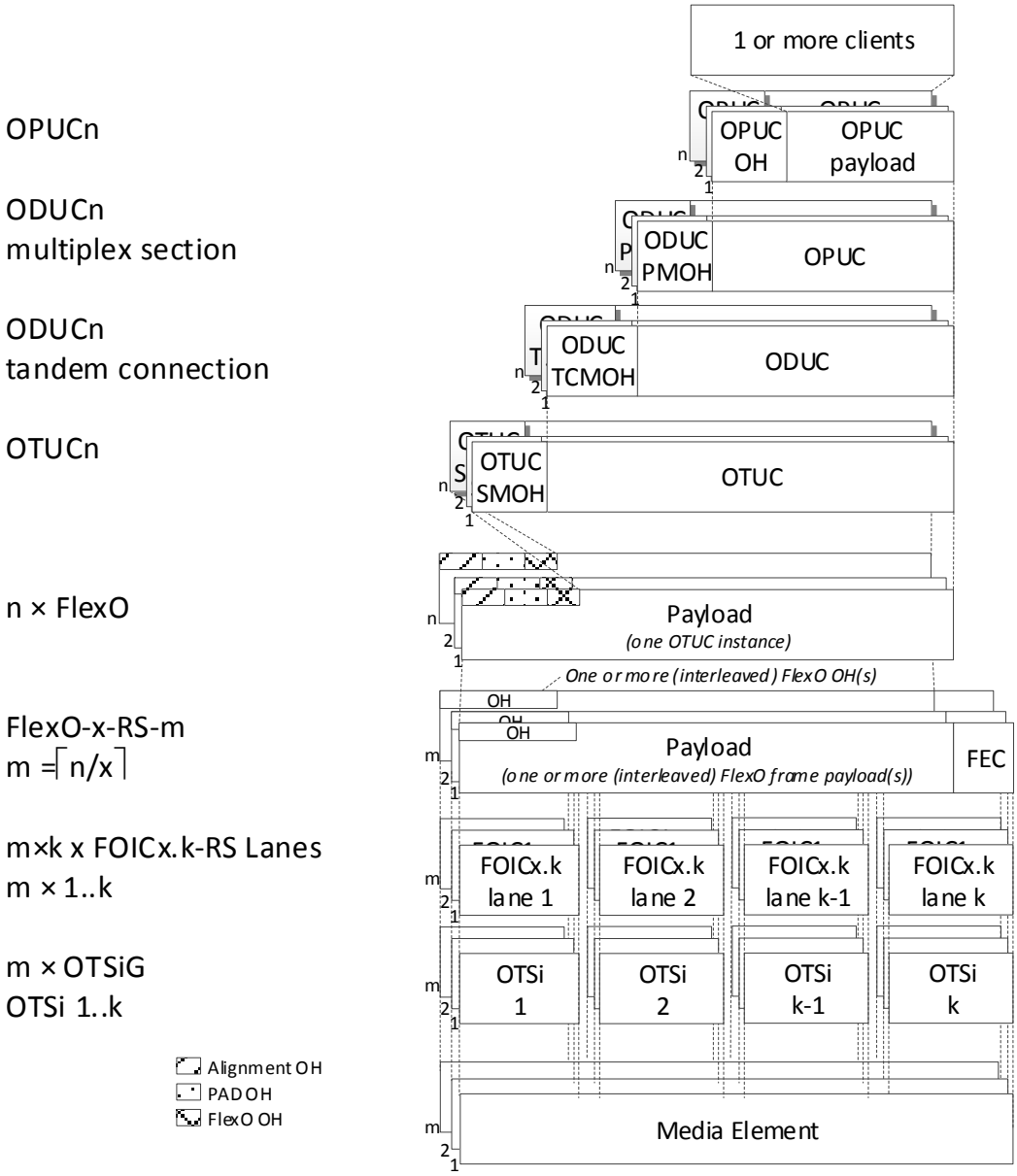

Figure 7-1 – FlexO-x-RS-m interface group principal information containment relationship

7.2 Processing and information flow

Functions, processed, and information flows are more formally specified in [ITU-T G.798].

8 FlexO frame

A FlexO frame is associated with a FlexO-x-RS interface and is independent of an OTUCn frame boundary and transport unit, the latter being specified in [ITU-T G.709].

NOTE – The OTUCn is the transport unit over OTN interfaces and consists of n OTUC frames. It is specified in [ITU-T G.709]

A FlexO frame consists of frame alignment marker area (AM), pad area (PAD), overhead area (OH), and payload area.

The FlexO frames carried over m interfaces of a FlexO-x-RS-m interface group are frame/multi-frame aligned at the source.

Documents
Document Sharing Hub
Copyright International Telecommunication Union/ITU Telcommunication Sector
Provided by IHS Markit under license with ITU-T
No reproduction or networking permitted without license from IHS
Licensee=/, User=,
Not for Resale,
Full document details: ITU-T G.709.1 2018

8.1 Frame structure

The FlexO frame structure is shown in Figure 8-1 and consists of 128 rows by 5,140 1-bit columns. It contains a frame alignment marker group area (AM) in row 1, columns 1 to 480, a pad area (PAD) in row 1, columns 481 to 960 per 100G instance, an overhead area (OH) in row 1 columns 961 to 1280 and a (128 × 5140 – 1280 = 656640 bit) payload area in the remainder of the frame.

NOTE – The FlexO frame structure is derived from 100Gbit/s Ethernet clause 91 [IEEE 802.3] FEC alignment and lane architecture, without any 66b alignment or 256b/257b transcoding functions.

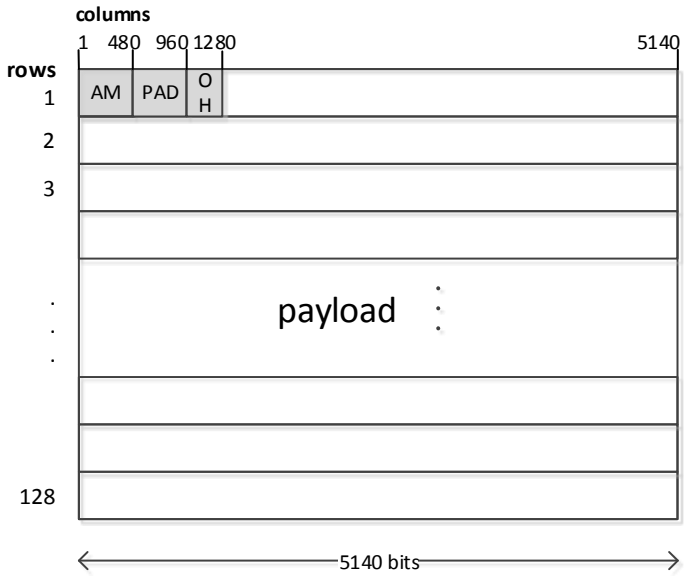

Figure 8-1 – FlexO frame structure

8.2 Multi-frame structure

In order to pad the payload area and provide space for additional OH fields, an 8-frame FlexO multi-frame structure is defined. The FlexO multi-frame structure is shown in Figure 8-2. It uses the three least significant bits of the multi-frame alignment signal (MFAS) overhead to identify the eight frames within the multi-frame.

The multi-frame contains seven fixed stuff locations in the payload area of FlexO frames, each containing 1,280 bits. These fixed-stuff locations are located in row 65, columns 1 to 1,280 of the first seven frames within the multi-frame. The last frame within the multi-frame does not contain fixed stuff.

The fixed stuff bits are filled with all-0s and not checked at the receiver sink function.

The FlexO multi-frame payload, excluding the fixed stuff (FS) locations, consists of 5,244,160 bits (655,520 bytes) out of the total 5,263,360 bits (657,920 bytes) per FlexO multi-frame.

Documents
Document Sharing Hub
Copyright International Telecommunication Union/ITU Telcommunication Sector
Provided by IHS Markit under license with ITU-T
No reproduction or networking permitted without license from IHS
Licensee=/, User=,
Not for Resale,
Full document details: ITU-T G.709.1 2018

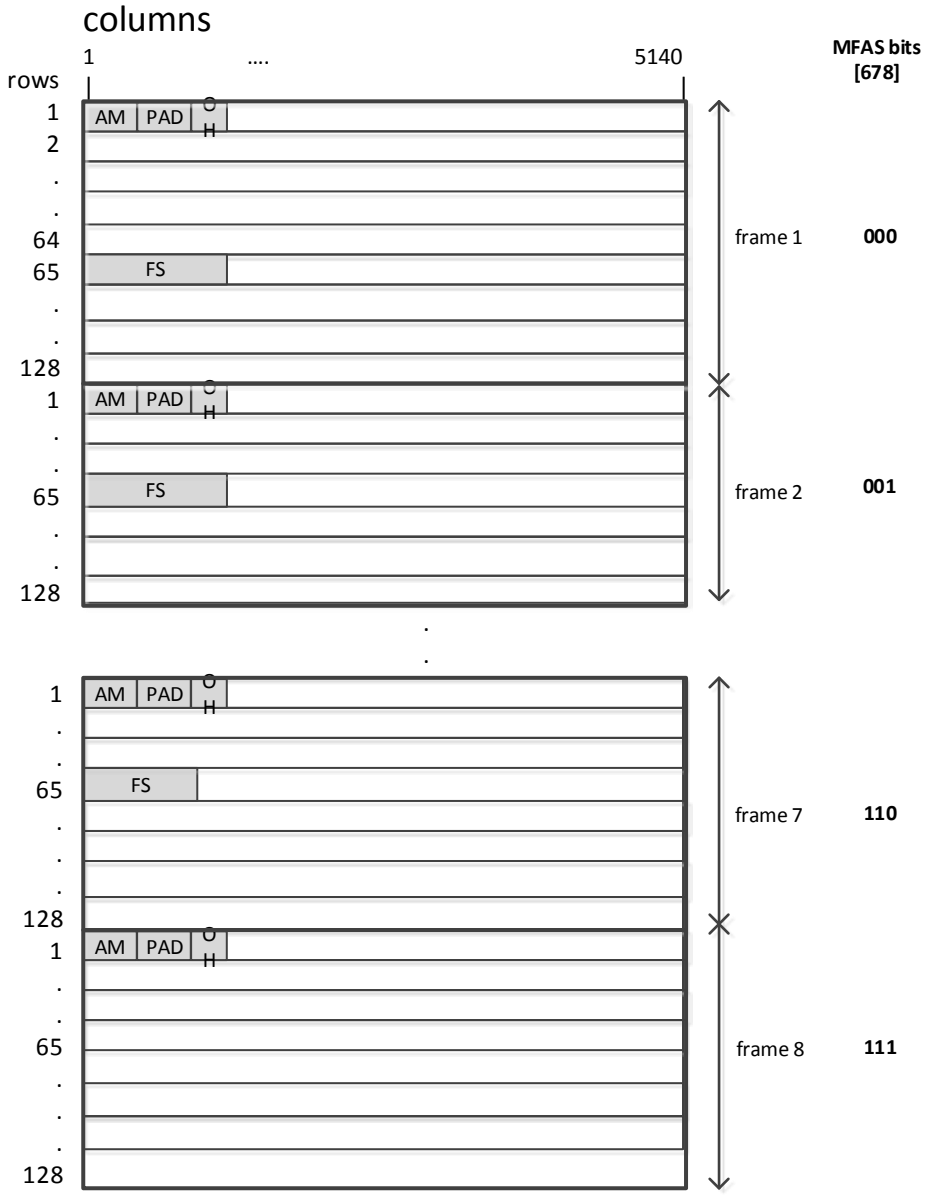

Figure 8-2 – FlexO multi-frame structure

8.3 Bit rates and frame periods

The bit rate and tolerance of the FlexO signal is defined in Table 8-1.

Table 8-1 – FlexO bit rate

FlexO nominal bit rate	FlexO bit-rate tolerance
491384/462961 × 99 532 800 kbit/s	±20 ppm
NOTE 1 – The nominal FlexO bit rate is approximately: 105 643 510.782 kbit/s. NOTE 2 – The FlexO bit rate can be based on the OTUC bit rate as follows: 4112/4097 × OTUC bit rate = 4112/4097 × 239/226 × 99 532 800 kbit/s.	

The frame and multi-frame periods of the FlexO signal are defined in Table 8-2.

Documents
Document Sharing Hub
Copyright International Telecommunication Union/ITU Telcommunication Sector
Provided by IHS Markit under license with ITU-T
No reproduction or networking permitted without license from IHS
Licensee=/, User=,
Not for Resale,
Full document details: ITU-T G.709.1 2018

Table 8-2 – FlexO frame and multi-frame periods

Frame period (Note)	Multi-frame period (Note)
~6.228 µs	49.822 µs
NOTE – The period is an approximated value, rounded to 3 decimal places.	

9 Alignment markers and overhead

The FlexO frame overhead consists of alignment markers (AM), padding (PAD), group management, synchronization, and communication channel fields. FlexO overhead areas in an elementary FlexO frame consist of 1,280 bits per 100G FlexO instance. It includes information to support group management and alignment functions. The FlexO overhead is terminated where the FlexO frame is assembled and disassembled.

The aggregate frame of a higher rate FlexO-x-RS interface is constructed by interleaving multiple FlexO frame instances.

An overview of FlexO overhead areas is presented in Figure 9-1. The term OH refers to the 320-bit field following the PAD.

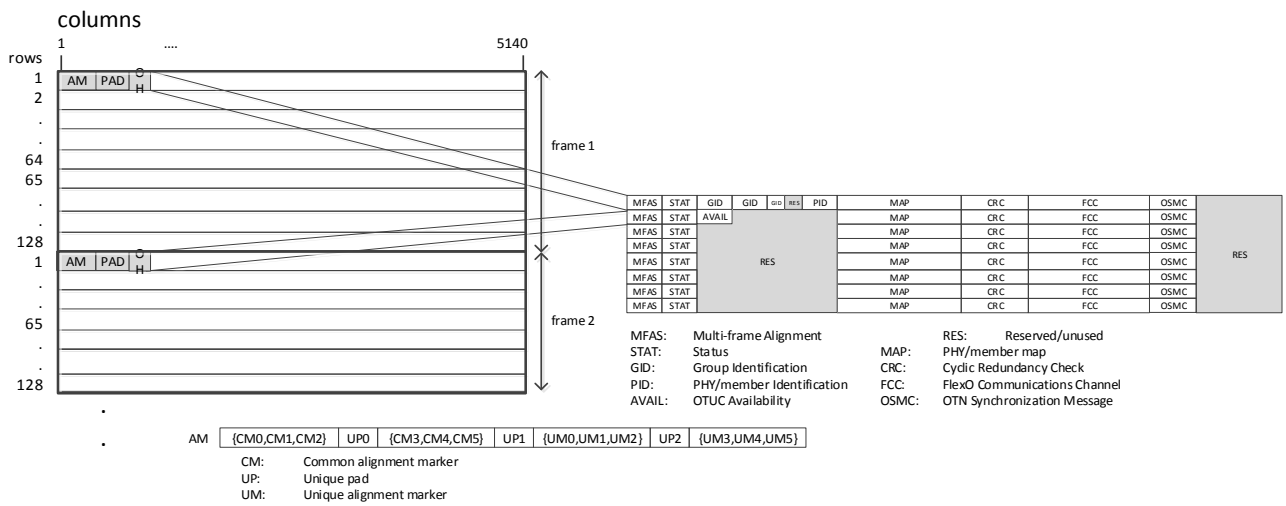

Figure 9-1 – Overhead overview

9.1 Lane alignment markers

Lane alignment markers are used for lane alignment, lane delineation, lane ordering and lane deskewing.

The alignment marker (AM) area length for a FlexO frame is defined as 480 bits, which holds four 120-bit lane alignment markers.

A lane alignment marker, as shown in Figure 9-2, consists of a common portion across all lanes, a unique portion per lane and some pad bits.

– CMx = 8-bit common marker field (common across lanes) – used for aligning lanes

– UMx = 8-bit unique marker field – used for identifying lanes

– UPx = 8-bit unique pad field – used for providing a DC balance when multiplexing lanes

Documents
Document Sharing Hub
Copyright International Telecommunication Union/ITU Telcommunication Sector
Provided by IHS Markit under license with ITU-T
No reproduction or networking permitted without license from IHS
Licensee=/, User=,
Not for Resale,
Full document details: ITU-T G.709.1 2018

NOTE – Alignment marker area length specified by clause 91 [IEEE 802.3] for 100 Gbit/s Ethernet interfaces, is 1285-bit per AM FEC frame period (every 4096 FEC codewords). It consists of 20 AM blocks of 64-bit, plus 5-bit extra padding required for 257b block alignment. Since the FlexO adaptation method described in this document does not rely on 257b blocks, the five padding bits are unnecessary.

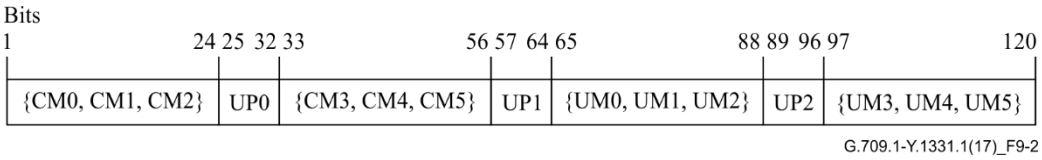

Figure 9-2 – FOICx.k lane alignment marker format

9.1.1 FlexO-1 alignment markers

The 100G FlexO-1 frame signal supports subsequent distribution into four logical lanes, numbered 0, 1, 2 and 3. Each lane carries a 120-bit lane alignment marker (am_i, i = 0,1,2,3) as specified in Table 9-1. Rows of Table 9-1 give the values of am_i transmitted over logical lane i.

The 480-bit FlexO-1 alignment marker area contains 10-bit interleaved parts of am_0, am_1, am_2 and am_3 as illustrated in Figure 9-3. The 480 bits contain the 10-bit interleaved parts of am_0 to am_3 in the order am_0, am_1, am_2, am_3, am_0, am_1, etc.

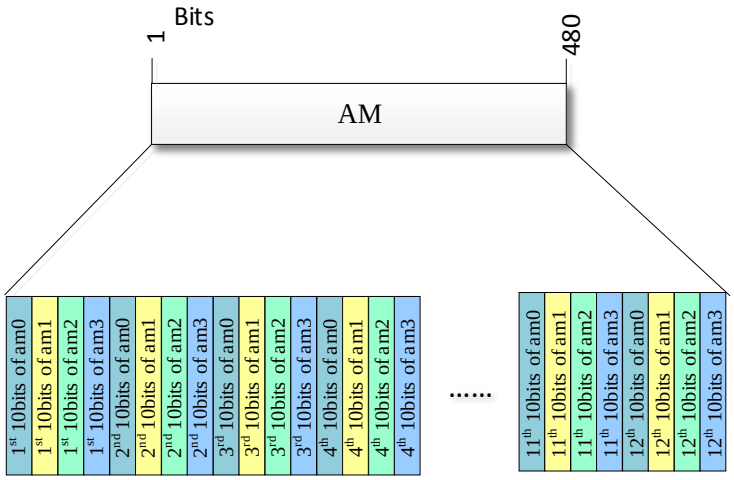

Figure 9-3 – 100G FlexO alignment marker area with four interleaved lane alignment markers

Table 9-1 – FlexO-1 alignment marker encodings

logical lane	Encoding														
	{CM0, CM1, CM2, UP0, CM3, CM4, CM5, UP1, UM0, UM1, UM2, UP2, UM3, UM4, UM5}														
0	59	52	64	6D	A6	AD	9B	9B	80	8E	CF	64	7F	71	30
1	59	52	64	20	A6	AD	9B	E6	5A	7B	7E	19	A5	84	81
2	59	52	64	62	A6	AD	9B	7F	7C	CF	6A	80	83	30	95
3	59	52	64	5A	A6	AD	9B	21	61	01	0B	DE	9E	FE	F4
NOTE – The value in each byte of this table is in MSB-first transmission order. Note that this per-byte bit ordering is the reverse of AM values found in [IEEE 802.3bs], which uses an LSB-first bit transmission format.															

Documents
Document Sharing Hub
Copyright International Telecommunication Union/ITU Telcommunication Sector
Provided by IHS Markit under license with ITU-T
No reproduction or networking permitted without license from IHS
Licensee=/, User=,
Not for Resale,
Full document details: ITU-T G.709.1 2018

9.1.2 100G FlexO PAD

The FlexO frame signal supports subsequent distribution of PADs into four logical lanes, numbered 0, 1, 2 and 3. Each lane carries a 120-bit pad (pad_i, i = 0,1,2,3). The values of the pads are all-0s.

The 480-bit 100G FlexO PAD area contains 10-bit interleaved parts of pad_0, pad_1, pad_2 and pad_3 as illustrated in Figure 9-4. The 480 bits contain the 10-bit interleaved parts of pad_0 to pad3 in the order pad_0, pad_1, pad_2, pad_3, pad_0, pad_1, etc.

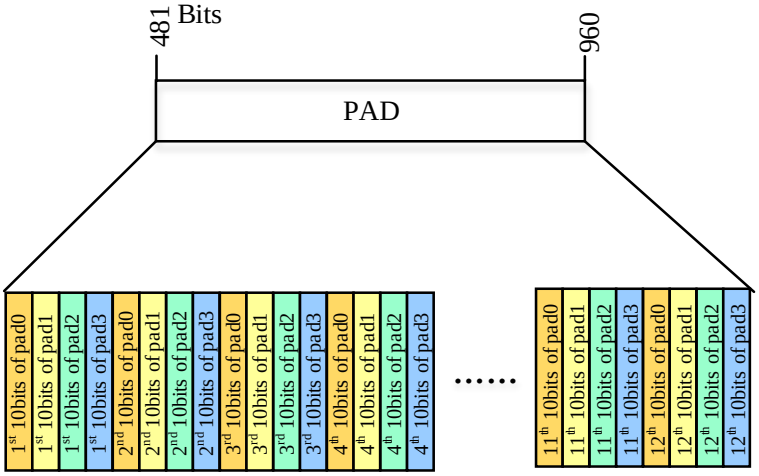

Figure 9-4 – 100G FlexO PAD area with four interleaved lane padding

9.1.3 FlexO-2 alignment markers

The 200G FlexO-2 frame signal supports subsequent distribution into eight logical lanes, numbered 0, 1, 2 to 7. Each lane carries a 120-bit lane alignment marker (am_i, i = 0,1,2 to 7) as specified in Table 9-2. Rows of Table 9-2 give the values of am_i transmitted over logical lane i.

The 960-bit FlexO-2 alignment marker group area contains 10-bit interleaved parts of am_0, am_1, am_2, am_3, am_4, am_5, am_6 and am_7 as illustrated in Figure 9-5. The 480 bits of the first 100G FlexO-1 instance contain the 10-bit interleaved parts of am_0 to am_7 in the order am_0, am_2, am_4, am_6, am_1, am_3, am_5, am_7, etc. The 480 bits of the second 100G FlexO-1 instance contain the 10-bit interleaved parts of am_0 to am_7 in the order am_1, am_3, am_5, am_7, am_0, am_2, am_4, am_6, etc.

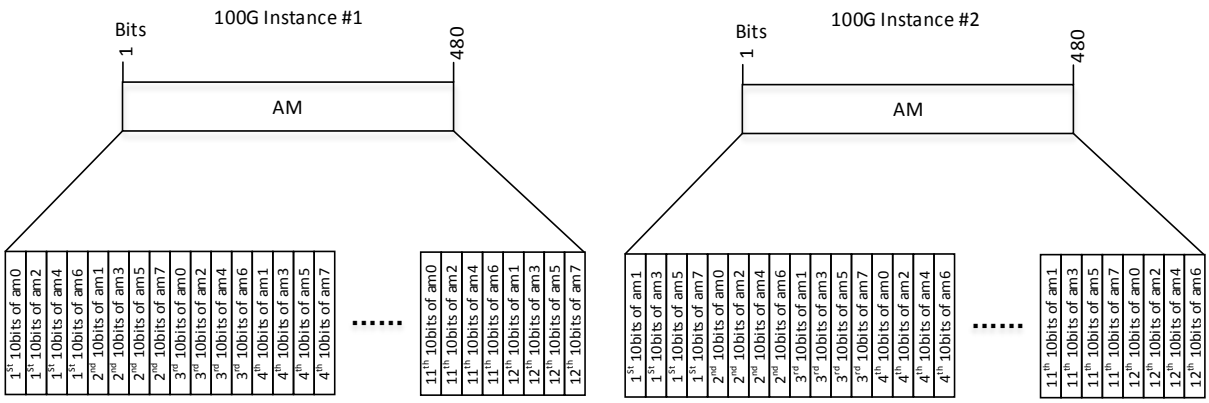

Figure 9-5 – 200G FlexO alignment marker area with eight interleaved lane alignment markers

Documents
Document Sharing Hub
Copyright International Telecommunication Union/ITU Telcommunication Sector
Provided by IHS Markit under license with ITU-T
No reproduction or networking permitted without license from IHS
Licensee=/, User=,
Not for Resale,
Full document details: ITU-T G.709.1 2018

Table 9-2 – FlexO-2 alignment marker encodings

logical lane	Encoding														
	{CM0, CM1, CM2, UP0, CM3, CM4, CM5, UP1, UM0, UM1, UM2, UP2, UM3, UM4, UM5}														
0	59	52	64	A0	A6	AD	9B	6B	CD	03	31	94	32	FC	CE
1	59	52	64	20	A6	AD	9B	E6	5A	7B	7E	19	A5	84	81
2	59	52	64	62	A6	AD	9B	7F	7C	CF	6A	80	83	30	95
3	59	52	64	5A	A6	AD	9B	21	61	01	0B	DE	9E	FE	F4
4	59	52	64	87	A6	AD	9B	98	54	8A	4F	67	AB	75	B0
5	59	52	64	45	A6	AD	9B	72	48	F2	8B	8D	B7	0D	74
6	59	52	64	BC	A6	AD	9B	77	42	39	85	88	BD	C6	7A
7	59	52	64	44	A6	AD	9B	4C	6B	6E	DA	B3	94	91	25
NOTE – The value in each byte of this table is in MSB-first transmission order. Note that this per-byte bit ordering is the reverse of AM values found in [IEEE 802.3bs], which uses an LSB-first bit transmission format.															

9.1.4 FlexO-2 PAD

Each instance of 200G FlexO-2-RS frame structure carries a 480-bit PAD field with all-0's value in row 1 and columns 481 to 960 as illustrated in figure 12-1.

9.1.5 FlexO-4 alignment markers

The 400G FlexO-4 frame signal supports subsequent distribution into sixteen logical lanes, numbered 0, 1, 2 to 15. Each lane carries a 120-bit lane alignment marker (am_i, i = 0,1,2 to 15) as specified in Table 9-3. Rows of Table 9-3 give the values of am_i transmitted over logical lane i.

The 1920-bit FlexO-4 alignment marker group area contains 10-bit interleaved parts of am_0, am_1, am_2, am_3, am_4, am_5, am_6, am_7, am_8, am_9, am_{10}, am_{11}, am_{12}, am_{13}, am_{14} and am_{15} as illustrated in Figure 9-6. The 960 bits of the first 200G FlexO-2 instance contain the 10-bit interleaved parts of am_0 to am_{15} in the order am_0, am_2, am_4, am_6, am_8, am_{10}, am_{12}, am_{14}, am_1, am_3, am_5, am_7, am_9, am_{11}, am_{13}, am_{15}, etc. The 960 bits of the second 200G FlexO-2 instance contain the 10-bit interleaved parts of am_0 to am_{15} in the order am_1, am_3, am_5, am_7, am_9, am_{11}, am_{13}, am_{15}, am_0, am_2, am_4, am_6, am_8, am_{10}, am_{12}, am_{14}, etc.

Documents
Document Sharing Hub
Copyright International Telecommunication Union/ITU Telcommunication Sector
Provided by IHS Markit under license with ITU-T
No reproduction or networking permitted without license from IHS
Licensee=/, User=,
Not for Resale,
Full document details: ITU-T G.709.1 2018