International Telecommunication Union

ITU-T

TELECOMMUNICATION
STANDARDIZATION SECTOR
OF ITU

G.8032/Y.1344

Corrigendum 1

(08/2017)

SERIES G: TRANSMISSION SYSTEMS AND MEDIA, DIGITAL SYSTEMS AND NETWORKS

Packet over Transport aspects – Ethernet over Transport aspects

SERIES Y: GLOBAL INFORMATION INFRASTRUCTURE, INTERNET PROTOCOL ASPECTS, NEXT-GENERATION NETWORKS, INTERNET OF THINGS AND SMART CITIES

Internet protocol aspects – Transport

Ethernet ring protection switching

Corrigendum 1

Recommendation ITU-T G.8032/Y.1344 (2015) – Corrigendum 1

Copyright International Telecommunication Union/ITU Telcommunication Sector
Provided by IHS Markit under license with ITU-T
No reproduction or networking permitted without license from IHS
Full document details: ITU-T G.8032 CORR 1 2017

Licensee=/, User=,
Not for Resale,

ITU-T G-SERIES RECOMMENDATIONS

TRANSMISSION SYSTEMS AND MEDIA, DIGITAL SYSTEMS AND NETWORKS

INTERNATIONAL TELEPHONE CONNECTIONS AND CIRCUITS	G.100–G.199
GENERAL CHARACTERISTICS COMMON TO ALL ANALOGUE CARRIER-TRANSMISSION SYSTEMS	G.200–G.299
INDIVIDUAL CHARACTERISTICS OF INTERNATIONAL CARRIER TELEPHONE SYSTEMS ON METALLIC LINES	G.300–G.399
GENERAL CHARACTERISTICS OF INTERNATIONAL CARRIER TELEPHONE SYSTEMS ON RADIO-RELAY OR SATELLITE LINKS AND INTERCONNECTION WITH METALLIC LINES	G.400–G.449
COORDINATION OF RADIOTELEPHONY AND LINE TELEPHONY	G.450–G.499
TRANSMISSION MEDIA AND OPTICAL SYSTEMS CHARACTERISTICS	G.600–G.699
DIGITAL TERMINAL EQUIPMENTS	G.700–G.799
DIGITAL NETWORKS	G.800–G.899
DIGITAL SECTIONS AND DIGITAL LINE SYSTEM	G.900–G.999
MULTIMEDIA QUALITY OF SERVICE AND PERFORMANCE – GENERIC AND USER-RELATED ASPECTS	G.1000–G.1999
TRANSMISSION MEDIA CHARACTERISTICS	G.6000–G.6999
DATA OVER TRANSPORT – GENERIC ASPECTS	G.7000–G.7999
PACKET OVER TRANSPORT ASPECTS	G.8000–G.8999
Ethernet over Transport aspects	G.8000–G.8099
MPLS over Transport aspects	**G.8100–G.8199**
Synchronization, quality and availability targets	G.8200–G.8299
Service Management	G.8600–G.8699
ACCESS NETWORKS	G.9000–G.9999

For further details, please refer to the list of ITU-T Recommendations.

--`,,```,,,,````-`-`,,`,,`,`,,`---

Documents
Document Sharing Hub

Copyright International Telecommunication Union/ITU Telcommunication Sector
Provided by IHS Markit under license with ITU-T
No reproduction or networking permitted without license from IHS
Licensee=/, User=,
Not for Resale,
Full document details: ITU-T G.8032 CORR 1 2017

Recommendation ITU-T G.8032/Y.1344

Ethernet ring protection switching

Corrigendum 1

Summary

Recommendation ITU-T G.8032/Y.1344 defines the automatic protection switching (APS) protocol and protection switching mechanisms for Ethernet layer network (ETH) ring topologies. Included are details pertaining to Ethernet ring protection characteristics, architectures and the ring APS (R-APS) protocol.

Amendment 1 provides support for management information indicating the node state of an Ethernet ring node and the port states of an Ethernet ring node's ports. It also updates references to Recommendation ITU-T G.870/Y.1352 with references to Recommendation ITU-T G.808.

Corrigendum 1 clarifies clause 10.1.10, Flush logic.

History

Edition	Recommendation	Approval	Study Group	Unique ID*
1.0	ITU-T G.8032/Y.1344	2008-06-22	15	11.1002/1000/9415
1.1	ITU-T G.8032/Y.1344 (2008) Amd. 1	2009-04-22	15	11.1002/1000/9678
2.0	ITU-T G.8032/Y.1344	2010-03-09	15	11.1002/1000/10661
2.1	ITU-T G.8032/Y.1344 (2010) Amd. 1	2010-06-11	15	11.1002/1000/10934
2.2	ITU-T G.8032/Y.1344 (2010) Cor. 1	2010-10-07	15	11.1002/1000/10902
2.3	ITU-T G.8032/Y.1344 (2010) Amd. 2	2011-02-25	15	11.1002/1000/11328
3.0	ITU-T G.8032/Y.1344	2012-02-13	15	11.1002/1000/11514
3.1	ITU-T G.8032/Y.1344 (2012) Amd. 1	2013-07-12	15	11.1002/1000/12025
4.0	ITU-T G.8032/Y.1344	2015-08-13	15	11.1002/1000/12550
4.1	ITU-T G.8032/Y.1344 (2015) Amd. 1	2016-11-13	15	11.1002/1000/13096
4.2	ITU-T G.8032/Y.1344 (2015) Cor. 1	2017-08-13	15	11.1002/1000/13313

* To access the Recommendation, type the URL http://handle.itu.int/ in the address field of your web browser, followed by the Recommendation's unique ID. For example, http://handle.itu.int/11.1002/1000/11830-en.

Documents
Document Sharing Hub

Copyright International Telecommunication Union/ITU Telcommunication Sector
Provided by IHS Markit under license with ITU-T
No reproduction or networking permitted without license from IHS
Licensee=/, User=,
Not for Resale,
Full document details: ITU-T G.8032 CORR 1 2017

FOREWORD

The International Telecommunication Union (ITU) is the United Nations specialized agency in the field of telecommunications, information and communication technologies (ICTs). The ITU Telecommunication Standardization Sector (ITU-T) is a permanent organ of ITU. ITU-T is responsible for studying technical, operating and tariff questions and issuing Recommendations on them with a view to standardizing telecommunications on a worldwide basis.

The World Telecommunication Standardization Assembly (WTSA), which meets every four years, establishes the topics for study by the ITU-T study groups which, in turn, produce Recommendations on these topics.

The approval of ITU-T Recommendations is covered by the procedure laid down in WTSA Resolution 1.

In some areas of information technology which fall within ITU-T's purview, the necessary standards are prepared on a collaborative basis with ISO and IEC.

NOTE

In this Recommendation, the expression "Administration" is used for conciseness to indicate both a telecommunication administration and a recognized operating agency.

Compliance with this Recommendation is voluntary. However, the Recommendation may contain certain mandatory provisions (to ensure, e.g., interoperability or applicability) and compliance with the Recommendation is achieved when all of these mandatory provisions are met. The words "shall" or some other obligatory language such as "must" and the negative equivalents are used to express requirements. The use of such words does not suggest that compliance with the Recommendation is required of any party.

INTELLECTUAL PROPERTY RIGHTS

ITU draws attention to the possibility that the practice or implementation of this Recommendation may involve the use of a claimed Intellectual Property Right. ITU takes no position concerning the evidence, validity or applicability of claimed Intellectual Property Rights, whether asserted by ITU members or others outside of the Recommendation development process.

As of the date of approval of this Recommendation, ITU had received notice of intellectual property, protected by patents, which may be required to implement this Recommendation. However, implementers are cautioned that this may not represent the latest information and are therefore strongly urged to consult the TSB patent database at http://www.itu.int/ITU-T/ipr/.

© ITU 2017

All rights reserved. No part of this publication may be reproduced, by any means whatsoever, without the prior written permission of ITU.

Copyright International Telecommunication Union/ITU Telcommunication Sector
Provided by IHS Markit under license with ITU-T
No reproduction or networking permitted without license from IHS
Licensee=/, User=,
Not for Resale,
Full document details: ITU-T G.8032 CORR 1 2017

Table of Contents

		Page
1	Scope	1
2	References	1
3	Definitions	2
	3.1 Terms defined elsewhere	2
	3.2 Terms defined in this Recommendation	3
4	Abbreviations and acronyms	3
5	Conventions	4
	5.1 Representation of octets	4
6	Introduction	5
7	Ring protection characteristics	5
	7.1 Monitoring methods and conditions	5
	7.2 Ethernet traffic and bandwidth consideration	6
	7.3 Ethernet ring protection switching performance	6
8	Ring protection conditions and commands	6
9	Ring protection architectures	7
	9.1 Revertive and non-revertive switching	7
	9.2 Protection switching triggers	7
	9.3 Protection switching models on a single Ethernet ring	7
	9.4 Traffic channel blocking	11
	9.5 R-APS channel blocking	11
	9.6 Filtering database flush	12
	9.7 Ethernet ring protection switching models for interconnection	12
10	Protection control protocol	21
	10.1 Principles of operations	21
	10.2 Protection switching behaviour	38
	10.3 R-APS format	43
	10.4 Failure of protocol defect	45
Appendix I – Ring protection network objectives		46
Appendix II – Ethernet ring network objectives		48
Appendix III – Ring protection scenarios		50
Appendix IV – Considerations for different timers		59
	IV.1 State machine use of timers	59
	IV.2 Guard timer use to block outdated R-APS messages	59
Appendix V		61
Appendix VI		62
Appendix VII		63

Documents
Document Sharing Hub
Copyright International Telecommunication Union/ITU Telcommunication Sector
Provided by IHS Markit under license with ITU-T
No reproduction or networking permitted without license from IHS
Licensee=/, User=,
Not for Resale,
Full document details: ITU-T G.8032 CORR 1 2017

Page

Appendix VIII – Flush optimization 64
VIII.1 Flushing FDB consideration 64
VIII.2 Scenarios of unnecessary FDB flushing 64
VIII.3 Example of FDB flush optimization 64
VIII.4 Additional definition of the ERP control process model and state machine .. 65
VIII.5 DNF status 69
Appendix IX 70
Appendix X 71
Appendix XI 72
Bibliography 73

Copyright International Telecommunication Union/ITU Telcommunication Sector
Provided by IHS Markit under license with ITU-T
No reproduction or networking permitted without license from IHS
Licensee=/, User=,
Not for Resale,
Full document details: ITU-T G.8032 CORR 1 2017

Recommendation ITU-T G.8032/Y.1344

Ethernet ring protection switching

Corrigendum 1

Editorial note: This is a complete-text publication. Modifications introduced by this corrigendum are shown in revision marks relative to Recommendation ITU-T G.8032/Y.1344 (2015) plus Amendment 1.

1 Scope

This Recommendation defines the automatic protection switching (APS) protocol and protection switching mechanisms for Ethernet layer network (ETH) ring topologies. The protection protocol defined in this Recommendation enables protected point-to-point, point-to-multipoint and multipoint-to-multipoint connectivity within a ring or interconnected rings, called "multi-ring/ladder network" topology.

The ETH ring maps to the physical layer ring structure. Protection schemes for the other layers, including the Ethernet physical layer network (ETY), are out of the scope of this Recommendation.

2 References

The following ITU-T Recommendations and other references contain provisions which, through reference in this text, constitute provisions of this Recommendation. At the time of publication, the editions indicated were valid. All Recommendations and other references are subject to revision; users of this Recommendation are therefore encouraged to investigate the possibility of applying the most recent edition of the Recommendations and other references listed below. A list of the currently valid ITU-T Recommendations is regularly published. The reference to a document within this Recommendation does not give it, as a stand-alone document, the status of a Recommendation.

[ITU-T G.805] Recommendation ITU-T G.805 (2000), *Generic functional architecture of transport networks*.

[ITU-T G.806] Recommendation ITU-T G.806 (2012), *Characteristics of transport equipment – Description methodology and generic functionality*.

[ITU-T G.808] Recommendation ITU-T G.808 (2016), *Terms and definitions for network protection and restoration*.

[ITU-T G.808.1] Recommendation ITU-T G.808.1 (2014), *Generic protection switching – Linear trail and subnetwork protection*.

[ITU-T G.809] Recommendation ITU-T G.809 (2003), *Functional architecture of connectionless layer networks*.

[ITU-T G.8001] Recommendation ITU-T G.8001/Y.1354 (2016), *Terms and definitions for Ethernet frames over transport.*

[ITU-T G.8010] Recommendation ITU-T G.8010/Y.1306 (2004), *Architecture of Ethernet layer networks*.

[ITU-T G.8013] Recommendation ITU-T G.8013/Y.1731 (2015), *Operation, administration and management (OAM) functions and mechanisms for Ethernet based networks*.

Documents
Document Sharing Hub
Copyright International Telecommunication Union/ITU Telcommunication Sector
Provided by IHS Markit under license with ITU-T
No reproduction or networking permitted without license from IHS
Licensee=/, User=,
Not for Resale,
Full document details: ITU-T G.8032 CORR 1 2017

[ITU-T G.8021] Recommendation ITU-T G.8021/Y.1341 (2016), *Characteristics of Ethernet transport network equipment functional blocks*.

[IEEE 802.1Q] IEEE Std 802.1Q (2014), *IEEE standard for local and metropolitan area networks: Media access control (MAC) bridges and virtual bridged local area networks*.

3 Definitions

3.1 Terms defined elsewhere

This Recommendation uses the following terms defined elsewhere:

3.1 Terms defined elsewhere

This Recommendation uses the following terms defined elsewhere:

3.1.1 adaptation: [ITU-T G.809]

3.1.2 adapted information: [ITU-T G.805]

3.1.3 characteristic information: [ITU-T G.805]

3.1.4 defect: [ITU-T G.806]

3.1.5 ERP instance: [ITU-T G.8001]

3.1.6 Ethernet ring node: [ITU-T G.8001]

3.1.7 Ethernet ring: [ITU-T G.8001]

3.1.8 failure: [ITU-T G.806]

3.1.9 flow: [ITU-T G.809]

3.1.10 hold-off time: [ITU-T G.808]

3.1.11 interconnection node: [ITU-T G.8001]

3.1.12 layer network: [ITU-T G.809]

3.1.13 link: [ITU-T G.805]

3.1.14 maintenance entity (ME): [ITU-T G.8001]

3.1.15 maintenance entity group (MEG): [ITU-T G.8001]

3.1.16 major ring: [ITU-T G.8001]

3.1.17 MEG end point (MEP): [ITU-T G.8001]

3.1.18 network: [ITU-T G.809]

3.1.19 non-revertive (protection) operation: [ITU-T G.808]

3.1.20 port: [ITU-T G.809]

3.1.21 protected domain: [ITU-T G.808]

3.1.22 protection transport entity: [ITU-T G.808]

3.1.23 protection: [ITU-T G.808]

3.1.24 R-APS virtual channel: [ITU-T G.8001]

3.1.25 revertive (protection) operation: [ITU-T G.808]

3.1.26 ring MEL: [ITU-T G.8001]

3.1.27 ring protection link (RPL): [ITU-T G.8001]

3.1.28 RPL neighbour node: [ITU-T G.8001]

3.1.29 RPL owner node: [ITU-T G.8001]

3.1.30 server signal fail (SSF): [ITU-T G.806]

3.1.31 signal degrade (SD): [ITU-T G.806]

Documents
Document Sharing Hub
Copyright International Telecommunication Union/ITU Telcommunication Sector
Provided by IHS Markit under license with ITU-T
No reproduction or networking permitted without license from IHS
Licensee=/, User=,
Not for Resale,
Full document details: ITU-T G.8032 CORR 1 2017

3.1.32 signal fail (SF): [ITU-T G.806]

3.1.33 signal: [ITU-T G.808]

3.1.34 sub-ring link: [ITU-T G.8001]

3.1.35 sub-ring: [ITU-T G.8001]

3.1.36 switch: [ITU-T G.808]

3.1.37 switching time: [ITU-T G.808]

3.1.38 tandem connection: [ITU-T G.805]

3.1.39 trail signal fail (TSF): [ITU-T G.806]

3.1.40 trail: [ITU-T G.805]

3.1.41 transfer time (T_t): [ITU-T G.808.1]

3.1.42 transport entity: [ITU-T G.809]

3.1.43 transport: [ITU-T G.809]

3.1.44 wait to block timer: [ITU-T G.8001]

3.1.45 wait-to-restore time: [ITU-T G.808]

3.1.46 working transport entity: [ITU-T G.808]

3.2 Terms defined in this Recommendation

None.

4 Abbreviations and acronyms

This Recommendation uses the following abbreviations and acronyms:

AI	Adapted Information
APS	Automatic Protection Switching
BPR	Blocked Port Reference
CCM	Continuity Check Message
CI	Characteristic Information
DNF	Do Not Flush
E-LAN	Ethernet LAN
EPL	Ethernet Private Line
ERP	Ethernet Ring Protection
ETH	Ethernet layer network
ETHDi	Ethernet MAC layer network Diagnostic function within MIP
ETY	Ethernet physical layer network
EVPL	Ethernet Virtual Private Line
FDB	Filtering Database
FF	Flow Forwarding
FOP-PM	Failure Of Protocol – Provisioning Mismatch
FOP-TO	Failure Of Protocol – Time Out
FP	Flow Point
FS	Forced Switch

Documents
Document Sharing Hub
Copyright International Telecommunication Union/ITU Telcommunication Sector
Provided by IHS Markit under license with ITU-T
No reproduction or networking permitted without license from IHS
Licensee=/, User=,
Not for Resale,
Full document details: ITU-T G.8032 CORR 1 2017

GFP	Generic Framing Procedure
ID	Identification
MAC	Media Access Control
MEG	Maintenance Entity Group
MEL	Maintenance Entity group Level
MEP	Maintenance entity group End Point
MI	Management Information
MPLS	Multiprotocol Label Switching
MS	Manual Switch
NR	No Request
OAM	Operation, Administration and Maintenance
OUI	Organizationally Unique Identifier
PDU	Protocol Data Unit
R-APS	Ring APS
RB	RPL Blocked
RPL	Ring Protection Link
SD	Signal Degrade
SDH VC	Synchronous Digital Hierarchy Virtual Circuit
SF	Signal Fail
SSF	Server Signal Fail
STP	Spanning Tree Protocol
TCM	Tandem Connection Monitoring
TLV	Type, Length and Value
Tx	Transmit
VID	VLAN Identifier
VLAN	Virtual Local Area Network
VPLS	Virtual Private Local Area Network Service
WTB	Wait To Block
WTR	Wait To Restore

5 Conventions

5.1 Representation of octets

Octets are represented as defined in [ITU-T G.8013].

When consecutive octets are used to represent a binary number, the lowest octet number has the most significant value. The bits in an octet are numbered from 1 to 8, where 1 is the least significant bit and 8 is the most significant bit.

Documents
Document Sharing Hub
Copyright International Telecommunication Union/ITU Telcommunication Sector
Provided by IHS Markit under license with ITU-T
No reproduction or networking permitted without license from IHS
Licensee=/, User=,
Not for Resale,
Full document details: ITU-T G.8032 CORR 1 2017

6 Introduction

This Recommendation specifies protection switching mechanisms and a protocol for Ethernet layer network (ETH) rings. Ethernet rings can provide wide-area multipoint connectivity more economically due to their reduced number of links. The mechanisms and protocol defined in this Recommendation achieve highly reliable and stable protection; and never form loops, which would fatally affect network operation and service availability.

Each Ethernet ring node is connected to adjacent Ethernet ring nodes participating in the same Ethernet ring, using two independent links. A ring link is bounded by two adjacent Ethernet ring nodes and a port for a ring link is called a ring port. The minimum number of Ethernet ring nodes in an Ethernet ring is two.

The fundamentals of this ring protection switching architecture are:

a) the principle of loop avoidance; and

b) the utilization of learning, forwarding and filtering database (FDB) mechanisms defined in the Ethernet flow forwarding function (ETH_FF [ITU-T G.8021]).

Loop avoidance in an Ethernet ring is achieved by guaranteeing that, at any time, traffic may flow on all but one of the ring links. This particular link is called the ring protection link (RPL) and under normal conditions this ring link is blocked, i.e., not used for service traffic. One designated Ethernet ring node, the RPL owner node, is responsible for blocking traffic at one end of the RPL. Under an Ethernet ring failure condition, the RPL owner node is responsible for unblocking its end of the RPL, unless the RPL has failed, allowing the RPL to be used for traffic. The other Ethernet ring node adjacent to the RPL, the RPL neighbour node, may also participate in blocking or unblocking its end of the RPL.

The occurrence of an Ethernet ring failure event results in protection switching of the traffic. This is achieved under the control of the ETH_FF functions on all Ethernet ring nodes.

An APS protocol is used to coordinate the protection actions over the ring.

The Ethernet rings could support a multi-ring or ladder network that consists of conjoined Ethernet rings by one or more interconnection points. The protection switching mechanisms and protocol defined in this Recommendation shall be applicable for a multi-ring/ladder network, if the following principles are adhered to:

1) R-APS channels are not shared across Ethernet ring interconnections;

2) on each ring port, each traffic channel and each R-APS channel are controlled (e.g., for blocking or flushing) by the Ethernet ring protection (ERP) control process of only one Ethernet ring;

3) each major ring or sub-ring must have its own RPL.

7 Ring protection characteristics

7.1 Monitoring methods and conditions

Ring protection switching occurs based on the detection of defects on the transport entity of each ring link. The defects are defined within the equipment Recommendation [ITU-T G.8021]. For the purpose of the protection switching process, a transport entity, within the protected domain, has a condition of either failed [i.e., signal fail (SF)] or non-failed (OK).

ERP may adopt any of the following monitoring methods:

Inherent – The fault condition status of each ring link connection is derived from the status of the underlying server layer trail.

Sub-layer – Each ring link is monitored using tandem connection monitoring (TCM).

Documents
Document Sharing Hub
Copyright International Telecommunication Union/ITU Telcommunication Sector
Provided by IHS Markit under license with ITU-T
No reproduction or networking permitted without license from IHS
Licensee=/, User=,
Not for Resale,
Full document details: ITU-T G.8032 CORR 1 2017

Test trail – Defects are detected using an extra test trail, i.e., an extra test trail is set up along each ring link.

The protection switching is agnostic to the monitoring method used, as long as it can be given (OK or SF) information regarding the transport entity of each ring link.

7.2 Ethernet traffic and bandwidth consideration

It is desirable that ring bandwidth accommodates all traffic that is protected, regardless of the ring protection switching state. Being different from linear protection, ERP does not separate working and protection transport entities, but reconfigures the transport entity during protection switching. Therefore care should be taken that ring link capacity can continue to support all ring APS (R-APS) and service traffic that is protected after protection switching.

7.3 Ethernet ring protection switching performance

In an Ethernet ring, without congestion, with all Ethernet ring nodes in the idle state (i.e., no detected failure, no active automatic or external command and receiving only "NR, RB" R-APS messages), with less than 1 200 km of ring fibre circumference and fewer than 16 Ethernet ring nodes, the switch completion time (transfer time as defined in [ITU-T G.808.1]) for a failure on a ring link shall be less than 50 ms. On Ethernet rings, under all other conditions, the switch completion time may exceed 50 ms (the specific interval is under study), to allow time to negotiate and accommodate coexisting APS requests. If sub-rings with R-APS virtual channel are interconnected to a major ring, the R-APS messages of the sub-ring that are inserted into the R-APS virtual channel take on the performance characteristics (e.g., delay, jitter, packet drop probability) of the ring links and Ethernet ring nodes that it crosses over the interconnected Ethernet ring. In this case, if the R-APS channel and R-APS virtual channel exceed the number of Ethernet ring nodes or fibre circumference defined above, the protection switching of the sub-ring may exceed 50 ms.

NOTE – The inclusion of the completion of FDB flush operation within the transfer time is for further study.

8 Ring protection conditions and commands

This Recommendation supports the following conditions of the Ethernet ring:

Signal fail (SF) – When an SF condition is detected on a ring link and it is determined to be a "stable" failure, Ethernet ring nodes adjacent to the failed ring link initiate the protection switching mechanism described in this Recommendation.

No request (NR) – The condition when no local protection switching requests are active.

The following administrative commands are supported (as possible values for ETH_C_MI_RAPS_ExtCMD):

Forced switch (FS) – This command forces a block on the ring port where the command is issued.

Manual switch (MS) – In the absence of a failure or FS, this command forces a block on the ring port where the command is issued.

Clear – The Clear command, at the Ethernet ring node, is used for the following operations.

a) Clearing an active local administrative command (e.g., FS or MS).

b) Triggering reversion before the wait to restore (WTR) or wait to block (WTB) timer expires in the case of revertive operation.

c) Triggering reversion in the case of non-revertive operation.

The following commands are for further study.

Lockout of protection – This command disables the protection group.

Documents
Document Sharing Hub
Copyright International Telecommunication Union/ITU Telcommunication Sector
Provided by IHS Markit under license with ITU-T
No reproduction or networking permitted without license from IHS
Licensee=/, User=,
Not for Resale,
Full document details: ITU-T G.8032 CORR 1 2017

Replace the RPL – This command moves the RPL by blocking a different ring link and unblocking the RPL permanently.

Exercise signal – Exercise of the R-APS protocol. The signal is chosen so as not to modify the position of the blocked ring port.

9 Ring protection architectures

In the ring protection architecture defined in this Recommendation, protection switching is performed at all Ethernet ring nodes.

The ring protection architecture relies on the existence of an APS protocol to coordinate ring protection actions around an Ethernet ring.

9.1 Revertive and non-revertive switching

In revertive operation, after the condition(s) causing a switch has/have cleared, the traffic channel is restored to the working transport entity, i.e., blocked on the RPL. If a defect is cleared, the traffic channel reverts after the expiry of a WTR timer (see clause 10.1.4), which is used to avoid toggling protection states in the case of intermittent defects.

In non-revertive operation, the traffic channel continues to use the RPL, if it has not failed, after a switch condition has cleared.

Since in ERP the working transport entity resources may be more optimized, in some cases it is desirable to revert to this working transport entity once all ring links are available. This is performed at the expense of an additional traffic interruption.

In some cases, there may be no advantage to revert to the working transport entities immediately. In this case, a second traffic interruption is avoided by not reverting protection switching.

9.2 Protection switching triggers

Protection switching shall be performed when:

a) SF is declared on one of the ring links and the detected SF condition has a higher priority than any other local request or far-end request; or

b) the received R-APS message requests to switch and it has a higher priority than any other local request; or

c) initiated by operator control (e.g., FS, MS) if it has a higher priority than any other local request or far-end request.

9.2.1 Signal fail declaration conditions

SF is declared when an ETH trail SF condition is detected. ETH trail SF is specified in [ITU-T G.8021].

9.3 Protection switching models on a single Ethernet ring

Figure 9-1 depicts an example of the ERP switching model defined in this Recommendation. Other network scenarios are permissible. In this example, four Ethernet ring nodes are depicted.

If the Ethernet ring is in its normal condition, one Ethernet ring node adjacent to the RPL is configured as the RPL owner node and, in this example, another Ethernet ring node adjacent to the RPL is configured as the RPL neighbour node. Both end nodes of the RPL are responsible for blocking the transmission and reception of traffic over the RPL when there is NR on the Ethernet ring.

Documents
Document Sharing Hub
Copyright International Telecommunication Union/ITU Telcommunication Sector
Provided by IHS Markit under license with ITU-T
No reproduction or networking permitted without license from IHS
Licensee=/, User=,
Not for Resale,
Full document details: ITU-T G.8032 CORR 1 2017

In Figure 9-1, Ethernet ring node D is the RPL owner node and Ethernet ring node A is the RPL neighbour node. Both Ethernet ring nodes are responsible for blocking the traffic channel on the RPL. Figure 9-1 presents the case when no failure is present on any ring link. In this case, the ETH characteristic information (ETH_CI [ITU-T G.8010]) traffic may be transferred over both ring links of any Ethernet ring node, except for the RPL on the Ethernet ring nodes where the RPL is blocked. In Figure 9-1, the traffic channel is shown as arrows being transmitted and received from the ring links. In Figures 9-1 to 9-3, only the ETH_FF function for a single virtual local area network (VLAN) is represented.

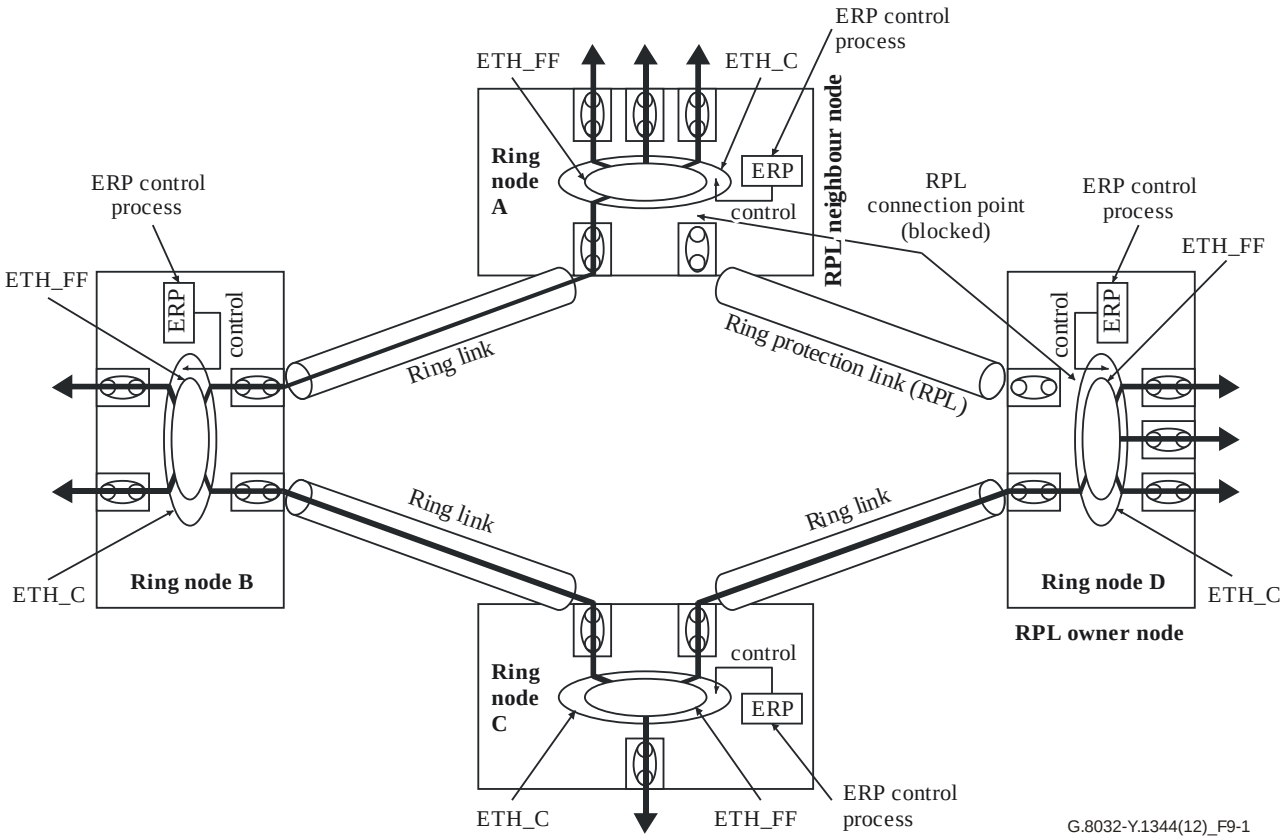

Figure 9-1 – Ethernet ring protection switching architecture – normal condition (single Ethernet ring)

Figure 9-2 illustrates a situation where a protection switch has occurred due to an SF condition on one ring link. In this case, the traffic channel is blocked bidirectionally on the ports where the failure is detected and bidirectionally unblocked at the RPL connection point.

In revertive operation, when the failure is recovered, the traffic channel resumes the use of the recovered ring link only after the traffic channel has been blocked on the RPL. On the other hand, in non-revertive operation, the traffic channel remains blocked on the recovered ring link and unblocked on the RPL even if the failure is recovered.

Copyright International Telecommunication Union/ITU Telcommunication Sector
Provided by IHS Markit under license with ITU-T
No reproduction or networking permitted without license from IHS
Licensee=/, User=,
Not for Resale,
Full document details: ITU-T G.8032 CORR 1 2017

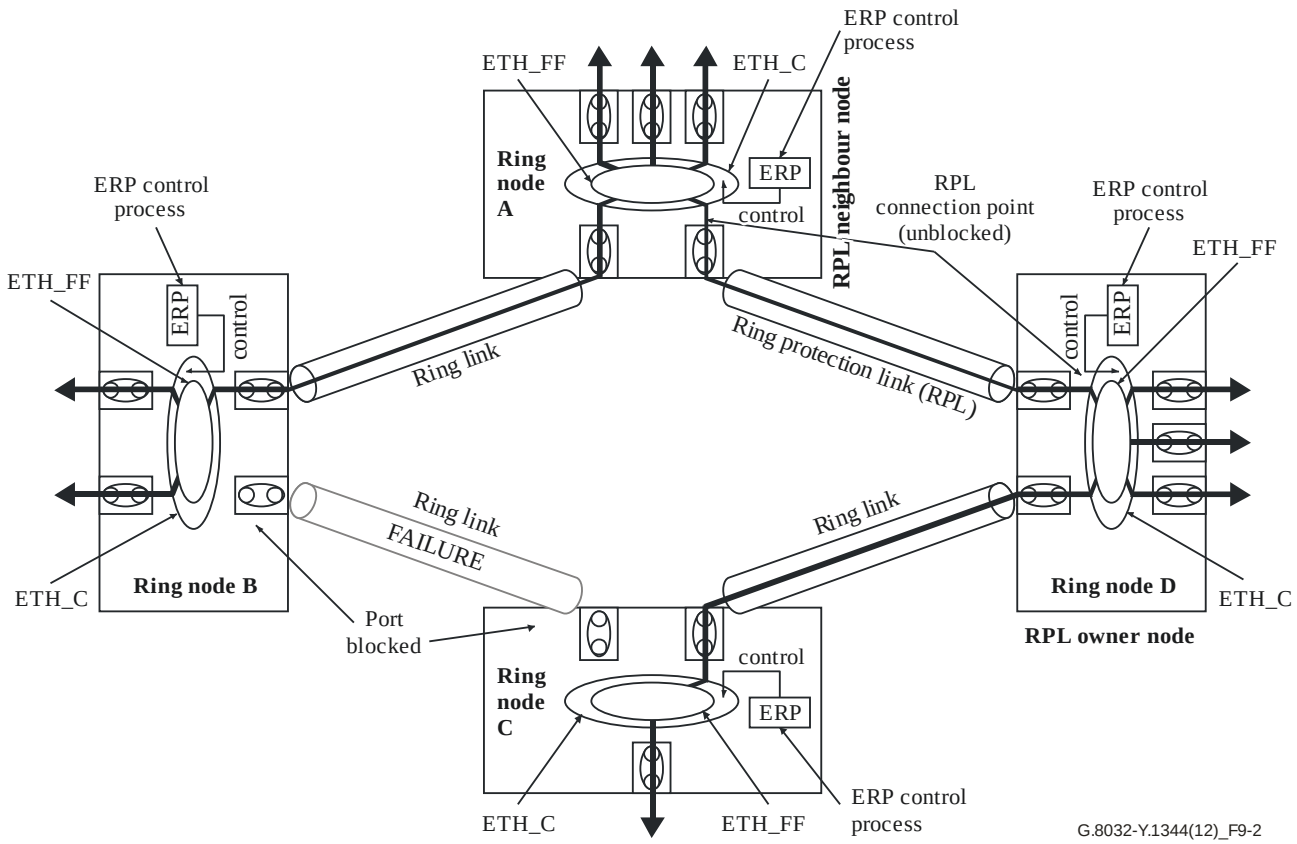

Figure 9-2 – Ethernet ring protection switching architecture – signal fail condition on one ring link (single Ethernet ring)

A model of the functionality of an Ethernet ring node is presented in Figures 9-3 and 9-4.

The ERP control process is instantiated to protect normal traffic over an Ethernet ring. Each instantiated ETH_FF function determines the specific output Ethernet flow point (ETH_FP [ITU-T G.8010]) over which the ETH_CI is transferred. The ETH_CI may be forwarded over any ETH_FP corresponding to ring links or to non-ring links.

The ERP control process controls the ETH_FF function to perform actions such as disabling forwarding over any ETH_FP corresponding to blocked ring links and flushing the FDB.

As an example, the ring links of each Ethernet ring node may be monitored by individually exchanging continuity check messages (CCMs) defined in [ITU-T G.8013] on the maintenance entity group end points (MEPs) illustrated in Figure 9-3.

Documents
Document Sharing Hub
Copyright International Telecommunication Union/ITU Telcommunication Sector
Provided by IHS Markit under license with ITU-T
No reproduction or networking permitted without license from IHS
Licensee=/, User=,
Not for Resale,
Full document details: ITU-T G.8032 CORR 1 2017

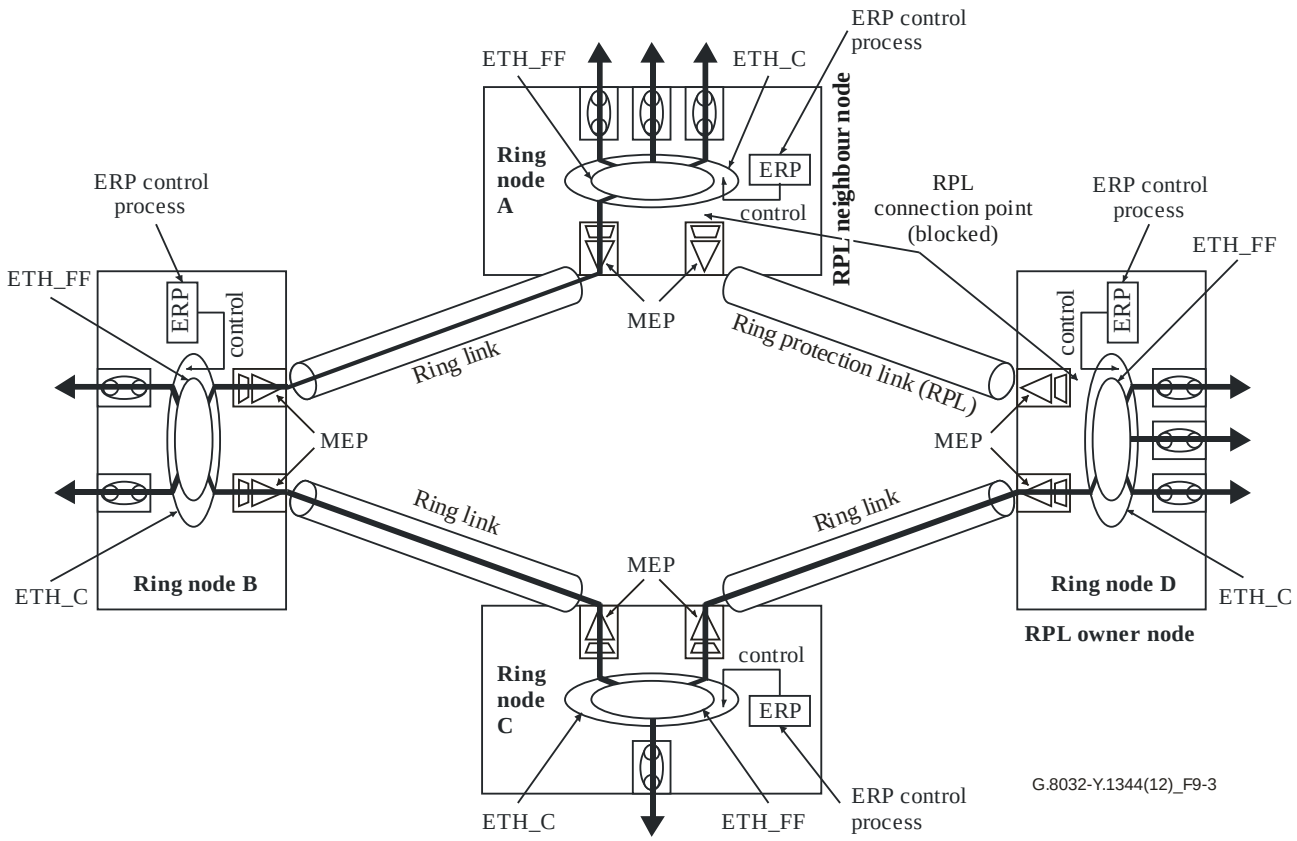

Figure 9-3 – MEPs in Ethernet ring protection switching architecture

Figure 9-4 represents the model of an Ethernet ring node. MEPs represented on each ring port are used for monitoring the ring link.

If an MEP detects a defect, which contributes to an SF defect condition, it informs the ERP control process that a failure condition has been detected. An ERP control function uses the Ethernet MAC characteristic information server signal fail (ETH_CI_SSF [ITU-T G.8021]) information, forwarded from the ETHx/ETH-m_A_Sk, to assert the SF condition of the ring link.

The ERP switching mechanism requires the R-APS protocol to coordinate the switching behaviour among all Ethernet ring nodes. The R-APS protocol communication is performed using R-APS messages. R-APS messages are transmitted and received during an ERP control process. The ETHDi/ETH adaptation function (ETHDi/ETH_A [ITU-T G.8021]) function in [ITU-T G.8021] extracts ETH_CI_RAPS information from a received R-APS message and sends the ETH_CI_RAPS information to the ERP control process. A received R-APS message is also forwarded to the ETH_FF. The ETHDi/ETH_A function also generates R-APS messages using the ETH_CI_RAPS information received from the ERP control process.

R-APS messages are forwarded using an ETH_FF function for R-APS traffic, represented in Figure 9-4 as R-APS_FF. Traffic, other than R-APS traffic, is forwarded by use of other ETH_FF functions, represented in Figure 9-4 as Service_FF. R-APS messages use a dedicated VLAN. Only one traffic VLAN is depicted in Figure 9-4. More traffic VLANs could be supported using multiple Service_FFs.

Copyright International Telecommunication Union/ITU Telcommunication Sector
Provided by IHS Markit under license with ITU-T
No reproduction or networking permitted without license from IHS
Licensee=/, User=,
Not for Resale,
Full document details: ITU-T G.8032 CORR 1 2017

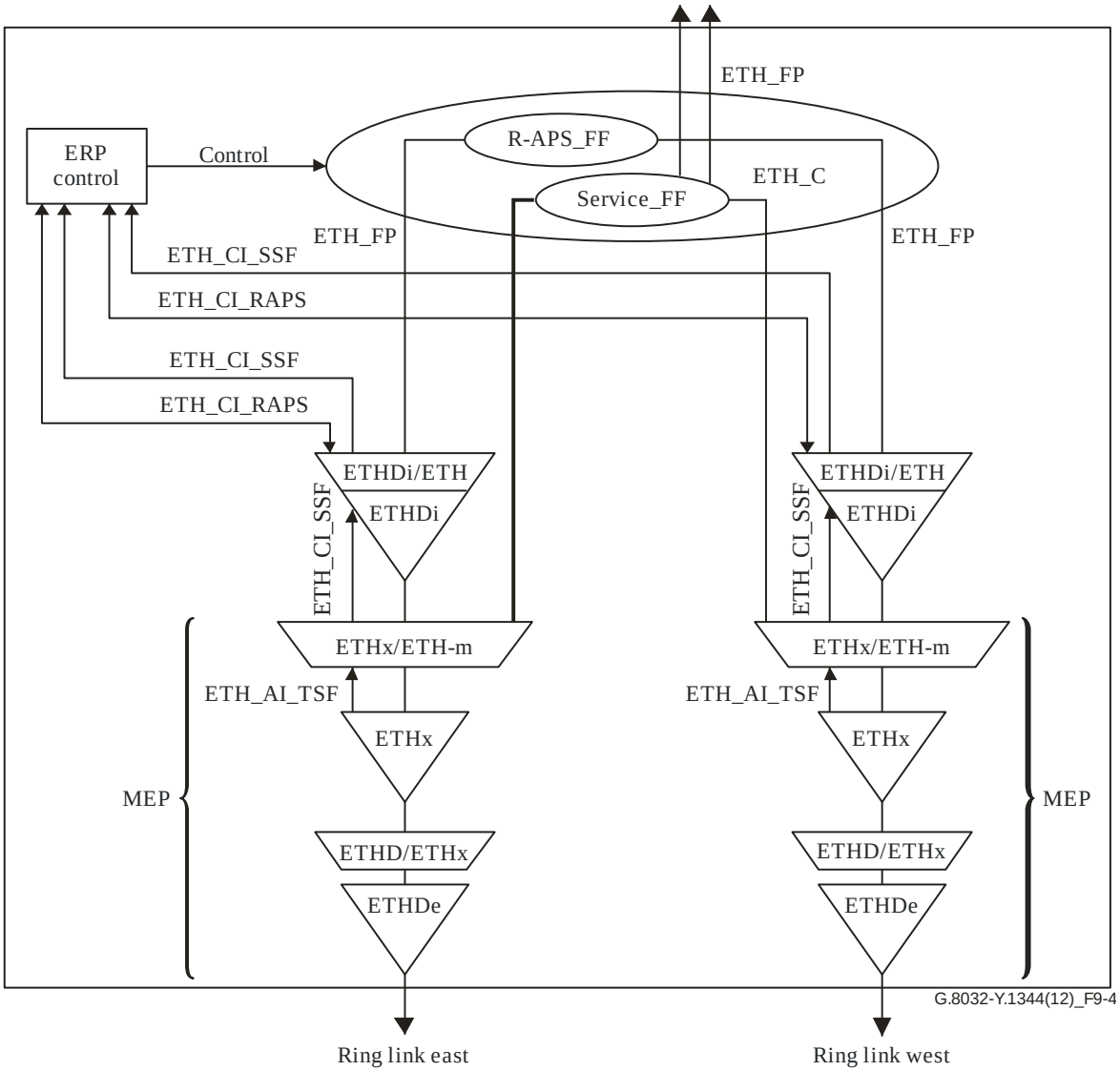

Figure 9-4 – MEPs and R-APS insertion function in Ethernet ring node (normal Ethernet ring node)

9.4 Traffic channel blocking

Blocking traffic is supported by excluding the connection point from the ETH_FF functions for the one or more VLAN identifiers (VIDs) of the traffic channel controlled by the ERP instance. This is equivalent to VID filtering as defined in clause 8.13.10 of [IEEE 802.1Q]. This results in blocking the transmission and reception of traffic on one ring port. Each ERP instance shall only block or unblock the VIDs of the traffic channels of the set of VLANs assigned for protection by that ERP instance.

9.5 R-APS channel blocking

R-APS channel VLAN traffic forwarding is always blocked at the same ring ports where the traffic channel is blocked, except on sub-rings without an R-APS virtual channel (see clause 9.7.2). It is supported by excluding the connection point from the ETH_FF function for the VID of the R-APS traffic and is equivalent to performing VID filtering as defined in clause 8.13.10 of [IEEE 802.1Q]. This:

a) only prevents R-APS messages received at one ring port from being forwarded to the other ring port;

Documents
Document Sharing Hub
Copyright International Telecommunication Union/ITU Telcommunication Sector
Provided by IHS Markit under license with ITU-T
No reproduction or networking permitted without license from IHS
Licensee=/, User=,
Not for Resale,
Full document details: ITU-T G.8032 CORR 1 2017

b) does not prevent R-APS messages, locally generated at the ERP control process, from being transmitted over both ring ports;

c) allows R-APS messages received at each ring port to be delivered to the ERP control process. The ERP control process shall discard all received R-APS messages with a ring ID that does not match the configured ring ID of the current ERP instance.

Each ERP instance shall only block or unblock its R-APS channel. This is guaranteed by excluding the connection point from the ETH_FF for the VID of the R-APS traffic and is equivalent to performing group address filtering as defined in [IEEE 802.1Q].

On sub-rings without an R-APS virtual channel, the R-APS channel is never blocked on any of its sub-ring nodes. However, in this case, the R-APS channel is terminated at the interconnection nodes.

9.6 Filtering database flush

An FDB flush consists of removing MAC addresses learned on the ring ports of the protected Ethernet ring from the Ethernet ring node's FDB.

Each ERP instance may flush only the FDB for the VIDs of the traffic channels of the set of VLANs it is assigned to protect.

9.7 Ethernet ring protection switching models for interconnection

The ERP switching model for interconnection supports multi-ring/ladder topologies such as those illustrated in Appendix II.

Figure 9-5 depicts an example of the model on a multi-ring/ladder network defined in this Recommendation. If the multi-ring/ladder network is in its normal condition, the RPL owner node of each Ethernet ring blocks the transmission and reception of traffic over the RPL for that Ethernet ring. Figure 9-5 presents the configuration when no failure is present on any ring link.

In Figure 9-5 there are two interconnected Ethernet rings. Ethernet ring ERP1 is composed of Ethernet ring nodes A, B, C and D and the ring links between these Ethernet ring nodes. Ethernet ring ERP2 is composed of Ethernet ring nodes C, D, E and F and the ring links C-to-F, F-to-E, E-to-D. The ring link between D and C is used for traffic of Ethernet rings ERP1 and ERP2. On their own, ERP2 ring links do not form a closed loop. A closed loop may be formed by the ring links of ERP2 and the ring link between interconnection nodes that is controlled by ERP1. ERP2 is a sub-ring. Ethernet ring node A is the RPL owner node for ERP1. Ethernet ring node E is the RPL owner node for ERP2. These Ethernet ring nodes (A and E) are responsible for blocking the traffic channel on the RPL for ERP1 and ERP2 respectively. There is no restriction on which ring link on an Ethernet ring may be set as RPL. For example the RPL of ERP1 could be set as the link between Ethernet ring nodes C and D.

Ethernet ring nodes C and D, which are common to both ERP1 and ERP2, are called the interconnection nodes. The ring links between the interconnection nodes are controlled and protected by the Ethernet ring it belongs to. In the example of Figure 9-5, the ring link between Ethernet ring nodes C and D is part of ERP1 and, as such, controlled and protected by ERP1. The ETH_CI traffic corresponding to the traffic channel may be transferred over a common Ethernet connection function (ETH_C function [ITU-T G.8021]) for ERP1 and ERP2 through the interconnection nodes C and D. Interconnection nodes C and D have separate ERP control processes for each Ethernet ring.

Documents
Document Sharing Hub
Copyright International Telecommunication Union/ITU Telcommunication Sector
Provided by IHS Markit under license with ITU-T
No reproduction or networking permitted without license from IHS
Licensee=/, User=,
Not for Resale,
Full document details: ITU-T G.8032 CORR 1 2017

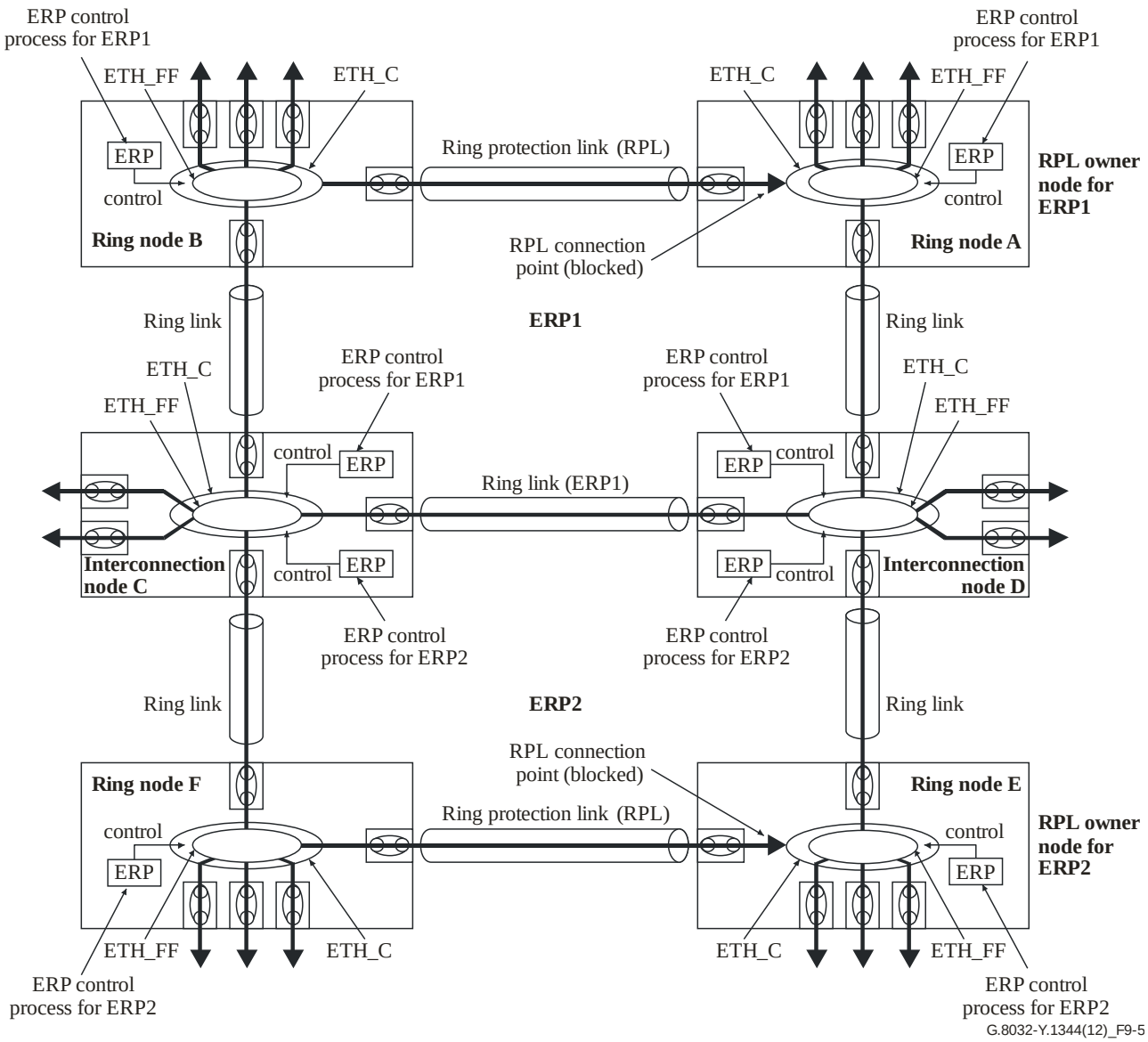

Figure 9-5 – Ethernet ring interconnection architecture – normal condition (multi-ring/ladder network)

Figure 9-6 illustrates a situation where protection switching has occurred due to an SF condition on the ring link between interconnection nodes C and D. The failure of this ring link triggers protection only on the Ethernet ring it belongs to, in this case ERP1. The traffic and R-APS channels are blocked bidirectionally on the ports where the failure is detected and bidirectionally unblocked at the RPL connection point on ERP1. The traffic channels remain bidirectionally blocked at the RPL connection point on ERP2. This prevents the formation of a loop.

Documents
Document Sharing Hub
Copyright International Telecommunication Union/ITU Telcommunication Sector
Provided by IHS Markit under license with ITU-T
No reproduction or networking permitted without license from IHS
Licensee=/, User=,
Not for Resale,
Full document details: ITU-T G.8032 CORR 1 2017

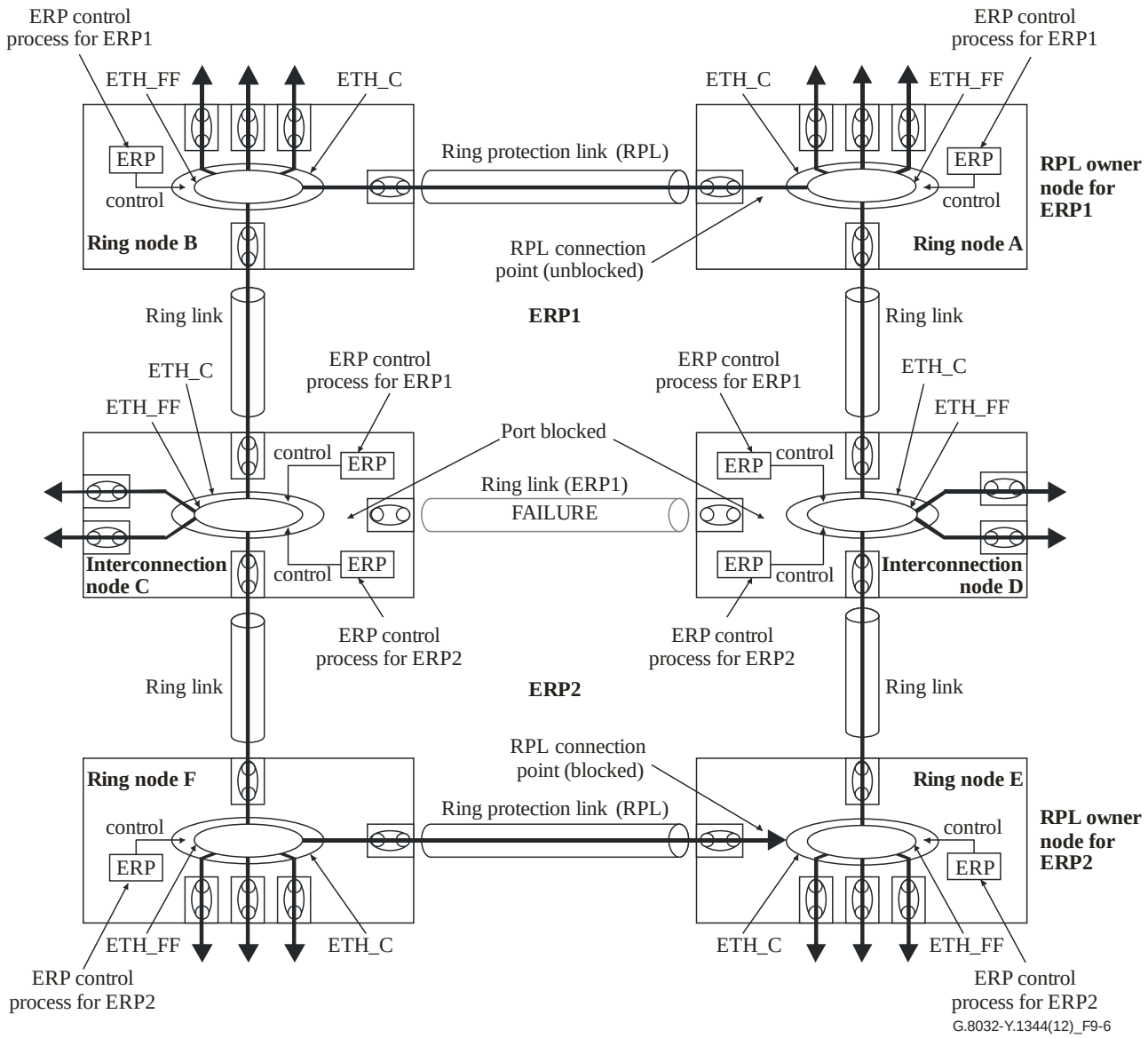

Figure 9-6 – Ethernet ring interconnection architecture – signal fail condition on a link between interconnection nodes (multi-ring/ladder network)

The interconnection nodes include functions to support the two Ethernet rings. Interconnection nodes C and D have a set of functions similar to Figure 9-4 to support Ethernet ring ERP1. Sub-ring ERP2 on these interconnection nodes only controls and protects one ring port; for this reason, the model required to support sub-ring ERP2 on these interconnection nodes is presented as follows – clause 9.7.1 presents the model with an R-APS virtual channel and clause 9.7.2 presents the model without an R-APS virtual channel.

9.7.1 Ring interconnection model with an R-APS virtual channel

For the sub-ring, the connectivity at the interconnection node is provided between a sub-ring link and the domain of another network. In the example of Figure 9-5, this network corresponds to Ethernet ring ERP1. An R-APS virtual channel provides R-APS connectivity between this interconnection node and the other interconnection node of the same sub-ring, over the network.

An example of the functional model of an interconnection node for a sub-ring using the R-APS virtual channel is depicted in Figure 9-7.

Copyright International Telecommunication Union/ITU Telcommunication Sector
Provided by IHS Markit under license with ITU-T
No reproduction or networking permitted without license from IHS
Licensee=/, User=,
Not for Resale,
Full document details: ITU-T G.8032 CORR 1 2017

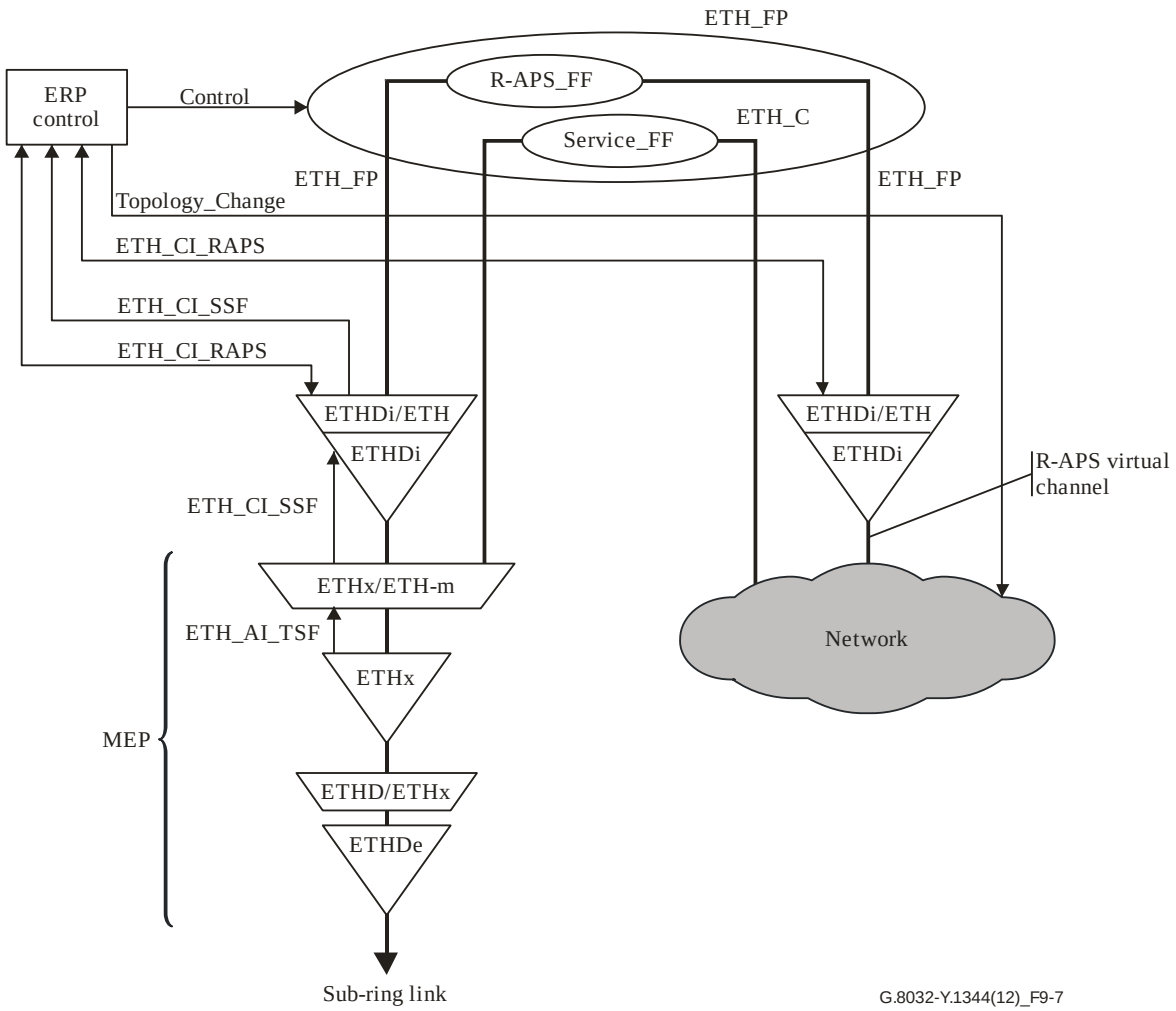

Figure 9-7 – MEPs and R-APS insertion function in an interconnection node (for a sub-ring connected to other network)

The R-APS virtual channel may follow the same path as the traffic channel over the network. The ERP control process of the sub-ring is capable of receiving and inserting R-APS messages over the R-APS virtual channel.

R-APS messages of this sub-ring that are forwarded over its R-APS virtual channel are broadcast or multicast over the interconnected network. For this reason, the broadcast or multicast domain of the R-APS virtual channel could be limited to the necessary links and nodes. For example, the R-APS virtual channel could span only the interconnecting Ethernet rings or sub-rings that are necessary for forwarding R-APS messages of this sub-ring. Care must be taken to ensure that the local R-APS messages of the sub-ring being transported over the R-APS virtual channel into the interconnected network can be uniquely disambiguated from those of other interconnected ring R-APS messages. This can be achieved by, for example, using separate VIDs for the R-APS virtual channels of different sub-rings.

Sub-ring topology changes may impact flow forwarding over the domain of the other (interconnected) network, as such topology change events are signalled to the domain of the other network using the Topology_Change signal. It is outside of the scope of this recommendation to define the use of Topology_Change signal by other technologies, such as the spanning tree protocol (STP) or virtual private local area network service (VPLS).

Figure 9-8 represents the model of an interconnection node combining the functions required to support the two Ethernet rings.

Documents
Document Sharing Hub
Copyright International Telecommunication Union/ITU Telcommunication Sector
Provided by IHS Markit under license with ITU-T
No reproduction or networking permitted without license from IHS
Licensee=/, User=,
Not for Resale,
Full document details: ITU-T G.8032 CORR 1 2017

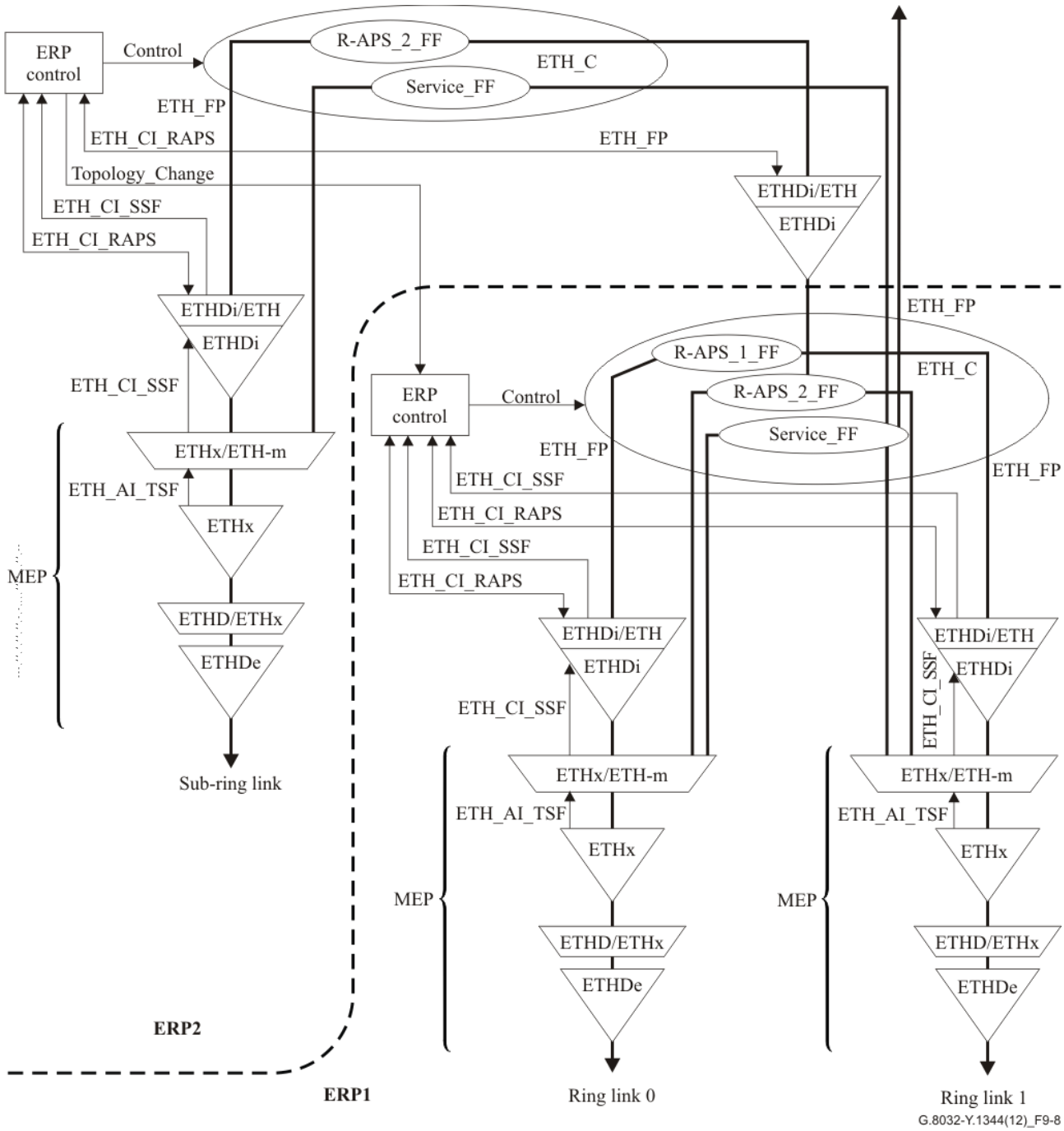

Figure 9-8 – MEPs and R-APS insertion function in an interconnection node with an R-APS virtual channel (different R-APS VIDs)

Copyright International Telecommunication Union/ITU Telcommunication Sector
Provided by IHS Markit under license with ITU-T
No reproduction or networking permitted without license from IHS
Licensee=/, User=,
Not for Resale,
Full document details: ITU-T G.8032 CORR 1 2017
Documents
Document Sharing Hub

The MEPs on ring links 0 and 1 are used for monitoring the ring links of ERP1. The MEP on the sub-ring link monitors the ring link of the sub-ring ERP2. In the model of Figure 9-8, R-APS channels are separated in ERP1 using different R-APS VIDs. R-APS messages for ERP1 are received on ring links 0 or 1 and separated based on the VID used for the R-APS_1 flow at the ETH to ETH multiplexing adaptation function (ETHx/ETH-m_A [ITU-T G.8021]) function. The ETHDi/ETH_A functions extract ETH_CI_RAPS information from the received R-APS messages and send the ETH_CI_RAPS information to the ERP control process of ERP1. The R-APS messages of the sub-ring received on ring link 0 and on ring link 1 are separated based on the VID used for the R-APS_2 flow at the ETHx/ETH-m_A function and they are then forwarded by the R-APS_2_FF function to the ETHDi/ETH_A function where it extracts ETH_CI_RAPS information from the received R-APS messages and sends the ETH_CI_RAPS information to the ERP control process of ERP2. If not blocked at the ETH_C function of ERP2, these messages are then further transmitted to the sub-ring port.

The R-APS VID of ERP2 may be considered as protected traffic spanning all ring links of ERP1, being blocked on the ring links of ERP1 by the same function that blocks the traffic channel on the ring links of that Ethernet ring. Figure 9-8 is only one example, other options for the construction of the R-APS virtual channel may be used.

NOTE – Other solutions for the construction of the R-APS virtual channel are for further study.

Service traffic may be forwarded between any of the three ring ports, or even other ports. This forwarding is also subject to the blocking state of the Ethernet ring and sub-ring ports as defined by the respective ERP control processes.

A Topology_Change signal is generated from ERP2 to the ERP1 control process whenever sub-ring ERP2 performs a protection switching event that results in a topology change; this occurs when an FDB flush is generated for the ERP2 interconnection node. Depending on the configuration, this signal may be used by the ERP control process of ERP1 to initiate actions to also trigger a topology update over Ethernet ring nodes on Ethernet ring ERP1.

9.7.2 Ring interconnection model without an R-APS virtual channel

In certain network scenarios, it may be desirable for the R-APS virtual channel of the sub-ring over the other network domain not to be used.

An example of the functional model of an interconnection node for a sub-ring not using the R-APS virtual channel is depicted in Figure 9-9.

Documents
Document Sharing Hub
Copyright International Telecommunication Union/ITU Telcommunication Sector
Provided by IHS Markit under license with ITU-T
No reproduction or networking permitted without license from IHS
Licensee=/, User=,
Not for Resale,
Full document details: ITU-T G.8032 CORR 1 2017

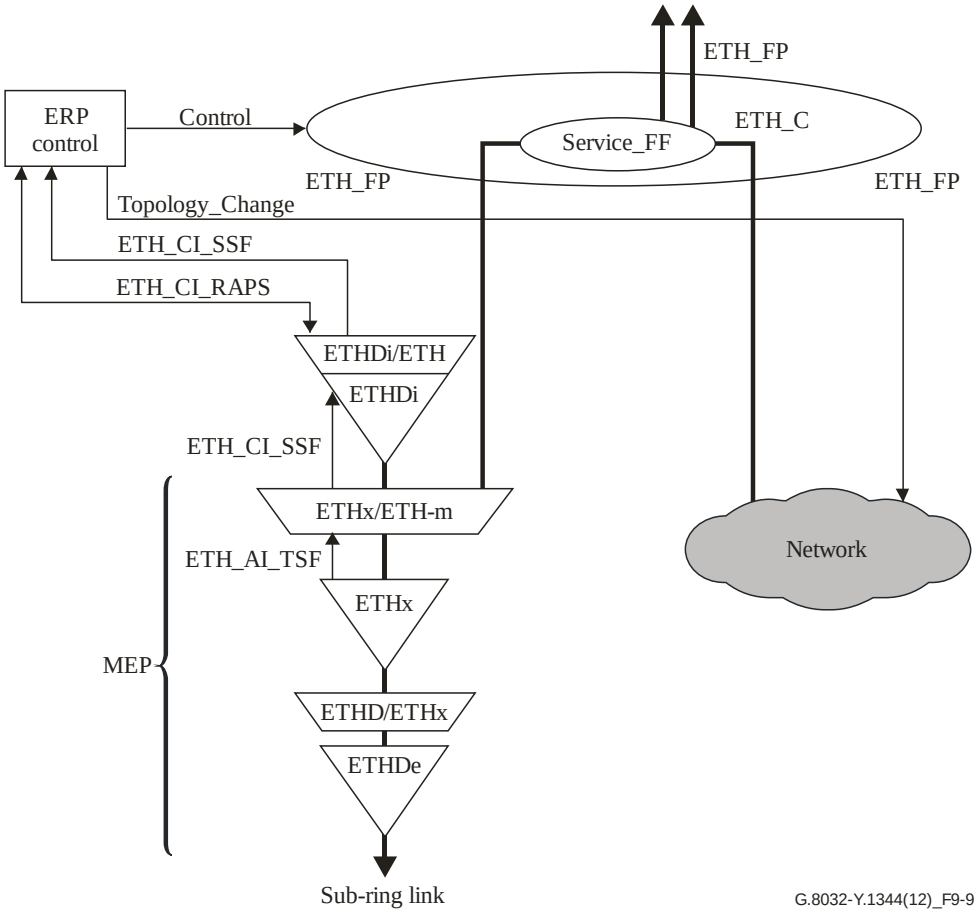

Figure 9-9 – MEPs and R-APS insertion function in a sub-ring interconnection node without an R-APS virtual channel (for a sub-ring connected to another network)

As depicted in Figure 9-9, the R-APS channel of the sub-ring is terminated at the interconnection nodes.

In order to prevent R-APS channel segmentation in the normal Ethernet ring condition, since there is neither an R-APS channel nor an R-APS virtual channel between the interconnection nodes of the sub-ring, the R-APS channel blocking (defined in clause 9.5) is not employed in these sub-ring configurations. If ring link failure of any ring link of the sub-ring occurs, the R-APS channel of the sub-ring may be segmented, preventing R-APS message exchange between some of the sub-ring's Ethernet ring nodes.

Apart from R-APS channel specifics, the operation of the sub-ring without an R-APS virtual channel is identical to that of a sub-ring with an R-APS virtual channel. Interconnection nodes also perform the same functions to inform other networks of topology change and flush propagation.

In addition, in order to ensure correct operation of the FDB flush operation, there are changes to the operation of the flush logic (see clause 10.1.10).

Figure 9-10 represents the model of an interconnection node combining the functions required to support the two Ethernet rings.

Copyright International Telecommunication Union/ITU Telcommunication Sector
Provided by IHS Markit under license with ITU-T
No reproduction or networking permitted without license from IHS
Licensee=/, User=,
Not for Resale,
Full document details: ITU-T G.8032 CORR 1 2017

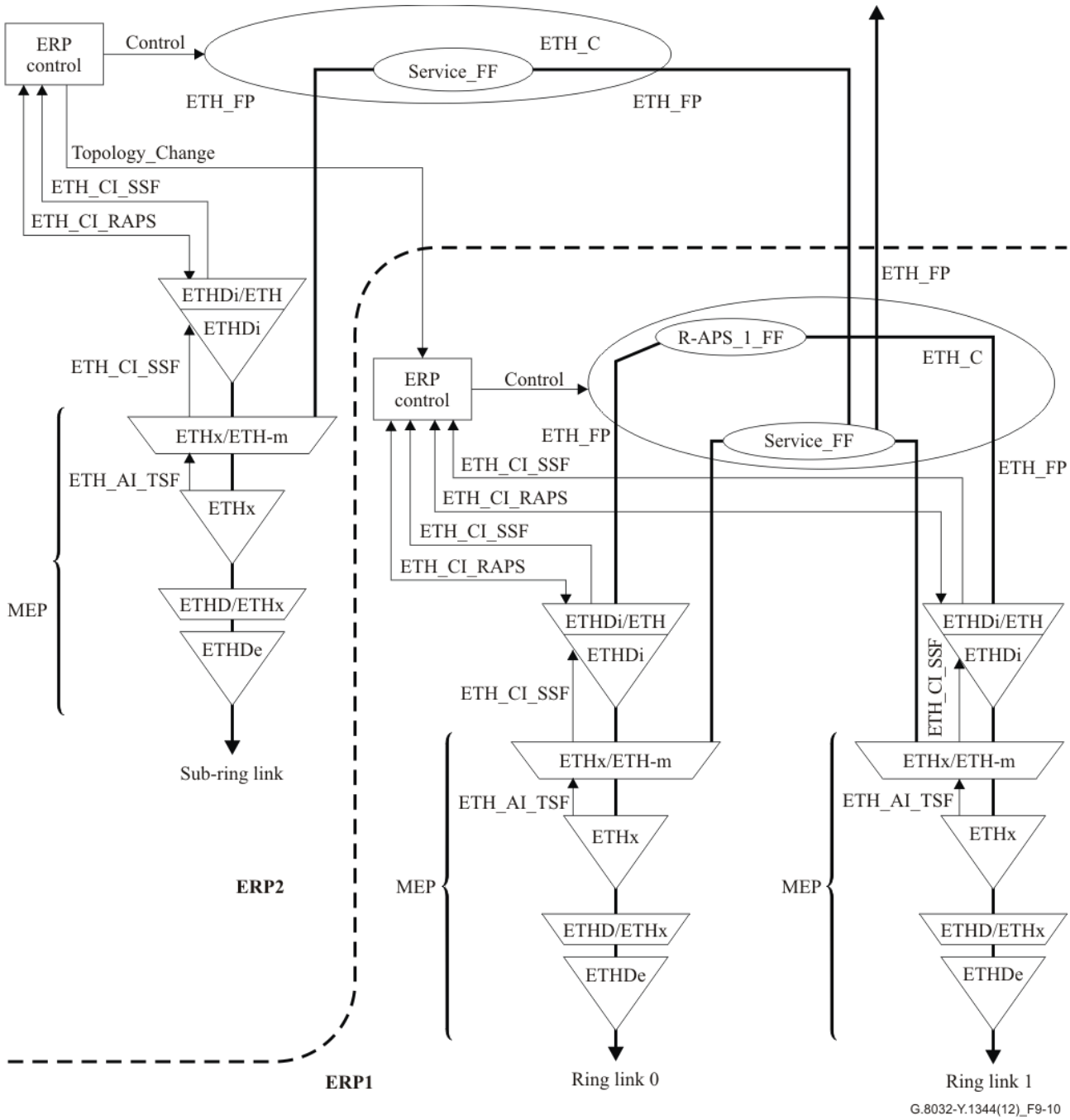

Figure 9-10 – MEPs and R-APS insertion function in a sub-ring interconnection node without an R-APS virtual channel (for a sub-ring connected to a major ring)

9.7.3 Guidelines for using the ring interconnection model with or without an R-APS virtual channel

This Recommendation defines two Ethernet ring interconnection options, as shown in Figure 9-11.

1) Sub-ring with an R-APS virtual channel: In this option, a virtual channel to tunnel R-APS messages from one interconnection node to the other interconnection node is established.

2) Sub-ring without an R-APS virtual channel: In this option, the R-APS channel is terminated at the interconnection nodes and its R-APS messages are not tunnelled between the interconnection nodes.

Documents
Document Sharing Hub
Copyright International Telecommunication Union/ITU Telcommunication Sector
Provided by IHS Markit under license with ITU-T
No reproduction or networking permitted without license from IHS
Licensee=/, User=,
Not for Resale,
Full document details: ITU-T G.8032 CORR 1 2017