International Telecommunication Union

ITU-T

TELECOMMUNICATION
STANDARDIZATION SECTOR
OF ITU

G.8151/Y.1374

(10/2020)

SERIES G: TRANSMISSION SYSTEMS AND MEDIA, DIGITAL SYSTEMS AND NETWORKS

Packet over Transport aspects – MPLS over Transport aspects

SERIES Y: GLOBAL INFORMATION INFRASTRUCTURE, INTERNET PROTOCOL ASPECTS, NEXT-GENERATION NETWORKS, INTERNET OF THINGS AND SMART CITIES

Internet protocol aspects – Transport

Management aspects of the MPLS-TP network element

Recommendation ITU-T G.8151/Y.1374

International Telecommunication Union
Documents
Document Sharing Hub

Full document details: ITU-T G.8151 2020

ITU-T G-SERIES RECOMMENDATIONS

TRANSMISSION SYSTEMS AND MEDIA, DIGITAL SYSTEMS AND NETWORKS

INTERNATIONAL TELEPHONE CONNECTIONS AND CIRCUITS	G.100–G.199
GENERAL CHARACTERISTICS COMMON TO ALL ANALOGUE CARRIER-TRANSMISSION SYSTEMS	G.200–G.299
INDIVIDUAL CHARACTERISTICS OF INTERNATIONAL CARRIER TELEPHONE SYSTEMS ON METALLIC LINES	G.300–G.399
GENERAL CHARACTERISTICS OF INTERNATIONAL CARRIER TELEPHONE SYSTEMS ON RADIO-RELAY OR SATELLITE LINKS AND INTERCONNECTION WITH METALLIC LINES	G.400–G.449
COORDINATION OF RADIOTELEPHONY AND LINE TELEPHONY	G.450–G.499
TRANSMISSION MEDIA AND OPTICAL SYSTEMS CHARACTERISTICS	G.600–G.699
DIGITAL TERMINAL EQUIPMENTS	G.700–G.799
DIGITAL NETWORKS	G.800–G.899
DIGITAL SECTIONS AND DIGITAL LINE SYSTEM	G.900–G.999
MULTIMEDIA QUALITY OF SERVICE AND PERFORMANCE – GENERIC AND USER-RELATED ASPECTS	G.1000–G.1999
TRANSMISSION MEDIA CHARACTERISTICS	G.6000–G.6999
DATA OVER TRANSPORT – GENERIC ASPECTS	G.7000–G.7999
PACKET OVER TRANSPORT ASPECTS	G.8000–G.8999
Ethernet over Transport aspects	G.8000–G.8099
MPLS over Transport aspects	**G.8100–G.8199**
Synchronization, quality and availability targets	G.8200–G.8299
Mobile network transport aspects	G.8300–G.8399
Service Management	G.8600–G.8699
ACCESS NETWORKS	G.9000–G.9999

For further details, please refer to the list of ITU-T Recommendations.

Documents
Document Sharing Hub

Full document details: ITU-T G.8151 2020

Recommendation ITU-T G.8151/Y.1374

Management aspects of the MPLS-TP network element

Summary

Recommendation ITU-T G.8151/Y.1374 addresses management aspects of the multi-protocol label switching (MPLS) transport profile (MPLS-TP) capable network element containing transport functions of one or more of the layer networks of the MPLS-TP network. The management of the MPLS-TP layer networks is separable from that of its client layer networks so that the same means of management can be used regardless of the client. The management functions for fault management, configuration management, performance monitoring and security management are specified.

This Recommendation aligns with the MPLS-TP architecture and requirements jointly developed by IETF and ITU-T and provides the specification for managing MPLS-TP network elements (NEs) that support the operations, administration, maintenance (OAM) protocol neutral equipment functionality as defined in Recommendations ITU-T G.8121/Y.1381, G.8121.1/Y.1381.1 and G.8121.2/Y.1381.2.

History

Edition	Recommendation	Approval	Study Group	Unique ID*
1.0	ITU-T G.8151/Y.1374	2007-10-22	15	11.1002/1000/9188
2.0	ITU-T G.8151/Y.1374	2012-07-22	15	11.1002/1000/11518
2.1	ITU-T G.8151/Y.1374 (2012) Amd. 1	2012-10-29	15	11.1002/1000/11811
2.2	ITU-T G.8151/Y.1374 (2012) Amd. 2	2013-10-07	15	11.1002/1000/12017
3.0	ITU-T G.8151/Y.1374	2015-01-13	15	11.1002/1000/12386
3.1	ITU-T G.8151/Y.1374 (2015) Amd. 1	2016-04-13	15	11.1002/1000/12825
4.0	ITU-T G.8151/Y.1374	2017-08-13	15	11.1002/1000/13319
5.0	ITU-T G.8151/Y.1374	2018-11-29	15	11.1002/1000/13763
6.0	ITU-T G.8151/Y.1374	2020-10-29	15	11.1002/1000/14506

Keywords

Configuration, equipment management, fault, MPLS-TP, performance monitoring, transport resource.

* To access the Recommendation, type the URL http://handle.itu.int/ in the address field of your web browser, followed by the Recommendation's unique ID. For example, http://handle.itu.int/11.1002/1000/11830-en.

Documents
Document Sharing Hub

Full document details: ITU-T G.8151 2020

FOREWORD

The International Telecommunication Union (ITU) is the United Nations specialized agency in the field of telecommunications, information and communication technologies (ICTs). The ITU Telecommunication Standardization Sector (ITU-T) is a permanent organ of ITU. ITU-T is responsible for studying technical, operating and tariff questions and issuing Recommendations on them with a view to standardizing telecommunications on a worldwide basis.

The World Telecommunication Standardization Assembly (WTSA), which meets every four years, establishes the topics for study by the ITU-T study groups which, in turn, produce Recommendations on these topics.

The approval of ITU-T Recommendations is covered by the procedure laid down in WTSA Resolution 1.

In some areas of information technology which fall within ITU-T's purview, the necessary standards are prepared on a collaborative basis with ISO and IEC.

NOTE

In this Recommendation, the expression "Administration" is used for conciseness to indicate both a telecommunication administration and a recognized operating agency.

Compliance with this Recommendation is voluntary. However, the Recommendation may contain certain mandatory provisions (to ensure, e.g., interoperability or applicability) and compliance with the Recommendation is achieved when all of these mandatory provisions are met. The words "shall" or some other obligatory language such as "must" and the negative equivalents are used to express requirements. The use of such words does not suggest that compliance with the Recommendation is required of any party.

INTELLECTUAL PROPERTY RIGHTS

ITU draws attention to the possibility that the practice or implementation of this Recommendation may involve the use of a claimed Intellectual Property Right. ITU takes no position concerning the evidence, validity or applicability of claimed Intellectual Property Rights, whether asserted by ITU members or others outside of the Recommendation development process.

As of the date of approval of this Recommendation, ITU had not received notice of intellectual property, protected by patents, which may be required to implement this Recommendation. However, implementers are cautioned that this may not represent the latest information and are therefore strongly urged to consult the TSB patent database at http://www.itu.int/ITU-T/ipr/.

© ITU 2021

All rights reserved. No part of this publication may be reproduced, by any means whatsoever, without the prior written permission of ITU.

Documents
Document Sharing Hub

Full document details: ITU-T G.8151 2020

Table of Contents

		Page
1	Scope	1
2	References	2
3	Definitions	3
	3.1 Terms defined elsewhere	3
	3.2 Terms defined in this Recommendation	4
4	Abbreviations and acronyms	4
5	Conventions	7
6	MPLS-TP management architecture	7
	6.1 MPLS-TP management network architecture	7
	6.2 MPLS-TP equipment management architecture	10
	6.3 Information flows over management points	11
7	Fault (maintenance) management	11
	7.1 Fault management applications	12
	7.2 Fault management functions	13
8	Configuration management	19
	8.1 Hardware	19
	8.2 Software	19
	8.3 Protection switching	19
	8.4 Trail termination	19
	8.5 Adaptation	24
	8.6 Diagnostic	36
	8.7 Connection	41
	8.8 Degraded (DEG) thresholds	43
	8.9 ZZZ_Reported	43
	8.10 Alarm severity	43
	8.11 Alarm reporting control	43
	8.12 Date and time	43
9	Accounting management	44
10	Performance management	44
	10.1 Performance management applications	44
	10.2 Performance monitoring functions	44
11	Security management	48
Bibliography		49

Documents
Document Sharing Hub
Full document details: ITU-T G.8151 2020

Documents
Document Sharing Hub

Full document details: ITU-T G.8151 2020

Recommendation ITU-T G.8151/Y.1374

Management aspects of the MPLS-TP network element

1 Scope

This Recommendation addresses management aspects of the multi-protocol label switching (MPLS) transport profile (MPLS-TP) capable network element containing transport functions of one or more of the layer networks of the MPLS-TP network. The management of the MPLS-TP layer networks is separable from that of its client layer networks so that the same means of management can be used regardless of the client. In this version of the Recommendation, fault management, configuration management, performance management and security management are specified.

The generic requirements for managing transport network elements (NEs) are specified in [ITU-T G.7710] and the requirements for the management of equipment used in networks supporting an MPLS-TP are specified in [b-IETF RFC 5951]. This Recommendation specifies the requirements for managing the following MPLS-TP specific equipment functional blocks, which are defined in [ITU-T G.8121]:

– MPLS-TP layer connection function;

– MPLS-TP layer trail termination functions;

– MPLS-TP server to MPLS-TP client adaptation functions;

– MPLS-TP server to Ethernet client adaptation functions;

– synchronous digital hierarchy (SDH) server to MPLS-TP client adaptation functions;

– plesiochronous digital hierarchy (PDH) server to MPLS-TP client adaptation functions;

– optical transport network (OTN) sever to MPLS-TP client adaptation functions;

– Ethernet MAC layer (ETH) sever to MPLS-TP client adaptation functions.

This Recommendation also describes the management network organizational model for communication between an element management layer (EML) operations system and the MPLS-TP equipment management function within an MPLS-TP network element.

The architecture described in this Recommendation for the management of MPLS-TP transport networks is based on the following considerations:

– the management view of network element functional elements should be uniform whether those elements form part of an inter-domain interface or part of an intra-domain interface. Those properties necessary to form such a uniform management view are to be included in this Recommendation;

– MPLS-TP layer network entities (MTLNEs) refer to trail termination, adaptation and connection functions as described in [ITU-T G.8110.1];

– a network element may only contain MPLS-TP layer network entities;

– a network element may contain both MTLNEs and client layer network entities (CLNEs);

– client layer entities are managed as part of their own logical domain (e.g., Ethernet management network);

– CLNE and MTLNE may or may not share a common message communication function (MCF) and management application function (MAF) depending on the application;

– CLNE and MTLNE may or may not share the same agent;

– server layer network entities (SLNEs) and MTLNEs may or may not share the same agent.

Documents
Document Sharing Hub
Full document details: ITU-T G.8151 2020

This Recommendation provides a representation of the MPLS-TP technology using the methodologies that have been used for other transport technologies (e.g., SDH, OTN and Ethernet).

2 References

The following ITU-T Recommendations and other references contain provisions which, through reference in this text, constitute provisions of this Recommendation. At the time of publication, the editions indicated were valid. All Recommendations and other references are subject to revision; users of this Recommendation are therefore encouraged to investigate the possibility of applying the most recent edition of the Recommendations and other references listed below. A list of the currently valid ITU-T Recommendations is regularly published. The reference to a document within this Recommendation does not give it, as a stand-alone document, the status of a Recommendation.

[ITU-T G.707] Recommendation ITU-T G.707/Y.1322 (2007), *Network node interface for the synchronous digital hierarchy (SDH)*.

[ITU-T G.709] Recommendation ITU-T G.709/Y.1331 (2016), *Interfaces for the optical transport network*.

[ITU-T G.806] Recommendation ITU-T G.806 (2012), *Characteristics of transport equipment – Description methodology and generic functionality*.

[ITU-T G.7041] Recommendation ITU-T G.7041/Y.1303 (2016), *Generic framing procedure (GFP)*.

[ITU-T G.7044] Recommendation ITU-T G.7044/Y.1347 (2011), *Hitless adjustment of ODUflex (GFP)*.

[ITU-T G.7710] Recommendation ITU-T G.7710/Y.1701 (2012), *Common equipment management function requirements*.

[ITU-T G.7712] Recommendation ITU-T G.7712/Y.1703 (2010), *Architecture and specification of data communication network*,

[ITU-T G.8051] Recommendation ITU-T G.8051/Y.1345 (2017), *Management aspects of the Ethernet Transport (ET) capable network element*.

[ITU-T G.8110.1] Recommendation ITU-T G.8110.1/Y.1370.1 (2011), *Architecture of MPLS Transport Profile (MPLS-TP) layer network*.

[ITU-T G.8113.1] Recommendation ITU-T G.8113.1/Y.1372.1 (2016), *Operations, administration and maintenance mechanism for MPLS-TP in packet transport networks*.

[ITU-T G.8113.2] Recommendation ITU-T G.8113.2/Y.1372.2 (2016), *Operations, administration and maintenance mechanisms for MPLS-TP networks using the tools defined for MPLS*.

[ITU-T G.8112] ITU-T Recommendation G.8112/Y.1371 (2020), *Interfaces for the MPLS transport profile layer network*

[ITU-T G.8121] Recommendation ITU-T G.8121/Y.1381 (2018), *Characteristics of MPLS-TP equipment functional blocks*.

[ITU-T G.8121.1] Recommendation ITU-T G.8121.1/Y.1381.1 (2018), *Characteristics of MPLS-TP equipment functional blocks supporting ITU-T G.8113.1/Y.1372.1 OAM mechanisms*.

[ITU-T G.8121.2] Recommendation ITU-T G.8121.2/Y.1381.2 (2018), *Characteristics of MPLS--TP equipment functional blocks supporting ITU-T G.8113.2/Y.1372.2 OAM mechanisms*.

Documents
Document Sharing Hub

Full document details: ITU-T G.8151 2020

[ITU-T M.3010] Recommendation ITU-T M.3010 (2000), *Principles for a telecommunications management network*.

[ITU-T M.3013] Recommendation ITU-T M.3013 (2000), *Considerations for a telecommunications management network*.

[ITU-T M.3100] Recommendation ITU-T M.3100 (2005), *Generic network information model*.

[ITU-T X.700] Recommendation ITU-T X.700 (1992), *Management framework for Open Systems Interconnection (OSI) For CCITT Applications*.

[ITU-T X.701] Recommendation ITU-T X.701 (1997), *Information technology – Open Systems Interconnection – Systems management overview*.

[ITU-T Y.1563] Recommendation ITU-T Y.1563 (2009), *Ethernet frame transfer and availability performance*.

3 Definitions

3.1 Terms defined elsewhere

This Recommendation uses the following terms defined elsewhere:

3.1.1 agent: [ITU-T X.701]

3.1.2 alarm reporting: [ITU-T M.3100]

3.1.3 alarm reporting control (ARC): [ITU-T M.3100]

3.1.4 atomic function (AF): [ITU-T G.806]

3.1.5 data communication network (DCN): [ITU-T G.7712]

3.1.6 local craft terminal: [ITU-T G.7710]

3.1.7 managed entity: [ITU-T M.3100]

3.1.8 managed object (MO): [ITU-T X.700]

3.1.9 managed object class (MOC): [ITU-T X.701]

3.1.10 management application function (MAF): [ITU-T G.7710]

3.1.11 management interface: [ITU-T M.3100]

3.1.12 management point (MP): [ITU-T G.806]

3.1.13 manager: [ITU-T X.701]

3.1.14 message communication function (MCF): [ITU-T M.3013]

3.1.15 network element (NE): [ITU-T M.3010]

3.1.16 network element function (NEF): [ITU-T M.3010]

3.1.17 operations system: [ITU-T M.3010]

3.1.18 operations system function: [ITU-T M.3100]

3.1.19 persistence interval: [ITU-T M.3100]

3.1.20 Q-interface: [ITU-T M.3010]

3.1.21 qualified problem: [ITU-T M.3100]

3.1.22 timed interval: [ITU-T M.3100]

3.1.23 workstation function (WF): [ITU-T M.3010]

Documents
Document Sharing Hub
Full document details: ITU-T G.8151 2020

3.2 Terms defined in this Recommendation

This Recommendation defines the following terms:

3.2.1 MPLS-TP management network (MT.MN): An MPLS-TP management network is a subset of a telecommunication management network (TMN) that is responsible for managing the parts of a network element that contain MPLS-TP layer network entities. A MT.MN may be subdivided into a set of MPLS-TP management subnetworks.

3.2.2 MPLS-TP management subnetwork (MT.MSN): An MPLS-TP management subnetwork (MT.MSN) consists of a set of separate embedded control channels (ECCs) and associated intra-site data communication links which are interconnected to form a data communication network (DCN) within any given MPLS-TP transport topology. For MPLS-TP, the physical channel supporting the ECC is the MPLS-TP management communication channel (MCC) as defined in [ITU-T G.7712]. A MT.MSN represents a MPLS-TP specific local communication network (LCN) portion of a network operator's overall DCN or telecommunication management network (TMN).

3.2.3 MPLS-TP network element (MT.NE): The part of a network element that contains entities from one or more MPLS-TP layer networks. A MT.NE may therefore be a standalone physical entity or a subset of a network element. It supports at least network element functions (NEFs) and may also support an operations system function (OSF). It contains managed objects (MOs), a message communication function (MCF) and a management application function (MAF). The functions of a MT.NE may be contained within a network element (NE) that also supports other layer networks. These layer network entities are considered to be managed separately from MPLS-TP entities. As such they are not part of the MPLS-TP management network (MT.MN) or MPLS-TP management subnetwork (MT.MSN).

4 Abbreviations and acronyms

This Recommendation uses the following abbreviations and acronyms:

1SL	One-Way Synthetic Loss
AcSL	Accepted Signal Label
AF	Atomic Function
AIS	Alarm Indication Signal
ALM	ALarM reporting
ARC	Alarm Reporting Control
CC	Continuity Check
CLNE	Client Layer Network Entity
CoS	Class of Service
CP	Connection Point
CSF	Client Signal Fail
CTP	Connection Termination Point
CtrlP	Control Plane
DCN	Data Communication Network
DEG	Degraded
DLM	Direct Loss Measurement
DM	Delay Measurement

Documents
Document Sharing Hub
Full document details: ITU-T G.8151 2020

ECC	Embedded Communication Channel
E-LSP	Explicitly TC-encoded-PSC LSP
EMF	Equipment Management Function
EML	Element Management Layer
EMS	Element Management System
ETH	Ethernet MAC layer
FCAPS	Fault management, Configuration management, Account management, Performance management and Security management
FLR	Frame Loss Ratio
GNE	Gateway Network Element
ILM	Inferred Loss Measurement
IP	Internet Protocol
LAN	Local Area Network
LCK	Locked
LCN	Local Communication Network
LCT	Local Craft Terminal
LM	Loss Measurement
L-LSP	Label-only-inferred PSC LSP
LSP	Label Switched Path
MAC	Media Access Control
MAF	Management Application Function
MCC	Management Communication Channel
MCF	Message Communication Function
MD	Mediation Device
MEP	Maintenance entity group End Point
MF	Mediation Function
MgmtP	Management Plane
MI	Management Information
MIB	Management Information Base
MIP	Maintenance entity group Intermediate Point
MN	Management Network
MO	Managed Object
MOC	Managed Object Class
MP	Management Point
MPLS	Multi-Protocol Label Switching
MPLS-TP	MPLS Transport Profile
MSN	Management SubNetwork

Documents
Document Sharing Hub
Full document details: ITU-T G.8151 2020

MSRP	MPLS-TP Shared Ring Protection
MT.C	MPLS-TP Channel layer (Note – Equivalent to MPLS-TP transport service layer)
MTLNE	MPLS-TP Layer Network Entity
MTM-n	MPLS-TP Transport Module layer n
MT.MN	MPLS-TP MN
MT.MSN	MPLS-TP MSN
MT.NE	MPLS-TP NE
MT.P	MPLS-TP Path layer
MT.S	MPLS-TP Section layer
NALM	No ALaRm reporting
NALM-CD	No ALaRm reporting, Count Down
NALM-NR	No ALaRm reporting, Not Ready
NALM-QI	No ALaRm reporting, Qualified Inhibit
NALM-TI	No ALaRm reporting, Timed Inhibit
NE	Network Element
NEF	Network Element Function
NEL	Network Element Layer
OAM	Operations, Administration and Maintenance
OAMP	Operations, Administration, Maintenance and Provisioning
OS	Operations System
OSF	Operations System Function
OSI	Open Systems Interconnection
OTN	Optical Transport Network
PDH	Plesiochronous Digital Hierarchy
PHB	Per Hop Behaviour
PMC	Performance Monitoring Clock
PSC	PHB Scheduling Class
PW	Pseudowire
QoS	Quality of Service
RTC	Real Time Clock
RTR	Reset Threshold Report
SCC	Signalling Communication Channel
SDH	Synchronous Digital Hierarchy
SES	Severely Errored Seconds
SLNE	Server Layer Network Entity
TCM	Tandem Connection Monitoring
TLV	Type Length Value

Documents
Document Sharing Hub
Full document details: ITU-T G.8151 2020

TMN	Telecommunication Management Network
TR	Threshold Report
TTL	Time-To-Live
TTP	Trail Termination Point
WAN	Wide Area Network
WS	WorkStation
WTR	Wait To Restore

5 Conventions

In this Recommendation, MT.MN stands for MPLS-TP management network, MT.MSN for MPLS-TP management subnetwork, MT.NE for MPLS-TP NE, MT.C for MPLS-TP channel layer, MT.P for MPLS-TP path layer and MT.S for MPLS-TP section layer.

6 MPLS-TP management architecture

See clause 6 of [ITU-T G.7710] for the generic architecture for managing transport equipment. MPLS-TP specific management architecture is described below.

The transport layer networks of MPLS-TP are described in [ITU-T G.8110.1], [ITU-T G.8112], [ITU-T G.8121], [ITU-T G.8121.1] and [ITU-T G.8121.2]. The management of the MPLS-TP layer networks is separable from that of its client layer networks so that the same means of management can be used regardless of the client.

6.1 MPLS-TP management network architecture

6.1.1 Relationship between TMN, MT.MN and MT.MSN

The inter-relationship between a management network, its subnetworks and a telecommunication management network (TMN) as generically described in clause 6.1.1 of [ITU-T G.7710] is applicable to MPLS-TP.

This Recommendation defines the MPLS-TP management network (MT.MN) and subnetworks (MT.MSNs).

6.1.2 Access to the MT.MSN

See clause 6.1.2 of [ITU-T G.7710] for the generic requirements.

6.1.3 MT.MSN requirements

See clause 6.1.3 of [ITU-T G.7710] for the generic requirements.

In addition, all MT.NEs must support message communication functions (MCFs). The MCF of an MT.NE initiates/terminates (in the sense of the lower protocol layers), forwards, or otherwise processes management messages over management communication channels (MCCs), or over other DCN interfaces. In addition:

– all MT.NEs are required to terminate the MT.S-MCCs. In OSI terms, this means that each NE must be able to perform the functions of an end system;

– MT.NEs may also be required to forward management messages between ports according to routing control information held in the MT.NE. In OSI terms, this means that some MT.NEs may be required to perform the functions of an intermediate system;

Documents
Document Sharing Hub
Full document details: ITU-T G.8151 2020

– in addition to supporting interfaces for the MT.S-MCC, a MT.NE may also be required to support other DCN interfaces, which may include MT.P-MCCs, or MT.C-MCCs or an Ethernet DCN interface.

The use of the MT.P-MCCs and MT.C-MCCs for management communications is within the scope of this Recommendation, see clause 6.1.7.

6.1.4 MT.MSN data communication network

Refer to clause 6.1.4 of [ITU-T G.7710] for the generic requirements.

6.1.4.1 Management communication channel

The MT.MN supports three MCCs:

1) MT.S-MCC (MCC_S)

2) MT.P-MCC (MCC_P)

3) MT.C-MCC (MCC_C)

The general MT.S-, MT.P- and MT.C-MCCs are described in [ITU-T G.7712].

Figure 6-1 illustrates a network scenario consisting of two operators. Operator B provides an MT.P Service to Operator A (i.e., Operator B transports the MT.P signal that begins and ends Operator A's domain). According to [ITU-T G.8110.1], the MCC_P and the MCC_C signals passed transparently through Operator B's network.

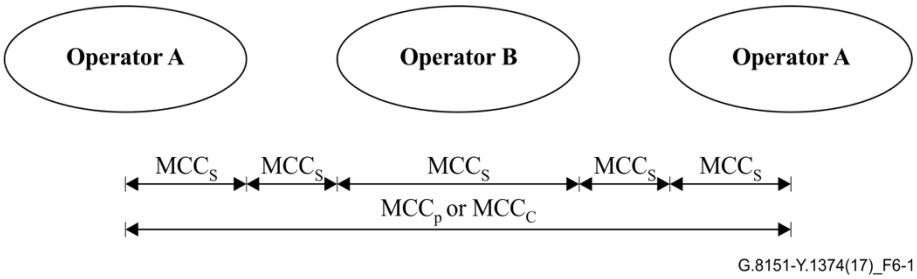

Figure 6-1 – MCC scenarios

The physical layer is terminated in every network element and its related adaptation function provides the MT.S signals as well as the MCC_S. Hence, the MCC_S cannot cross administrative domains. In Figure 6-1, Figure 6-2 and Figure 6-3 illustrate scenarios where the MCC_P and MCC_C are transported transparently though Operator B's domain (the Operator B network elements are not shown in Figure 6-2 and Figure 6-3). In these scenarios, it is possible that Operator B may use the MCC_S within its own domain for the management of its domain.

Documents
Document Sharing Hub
Full document details: ITU-T G.8151 2020

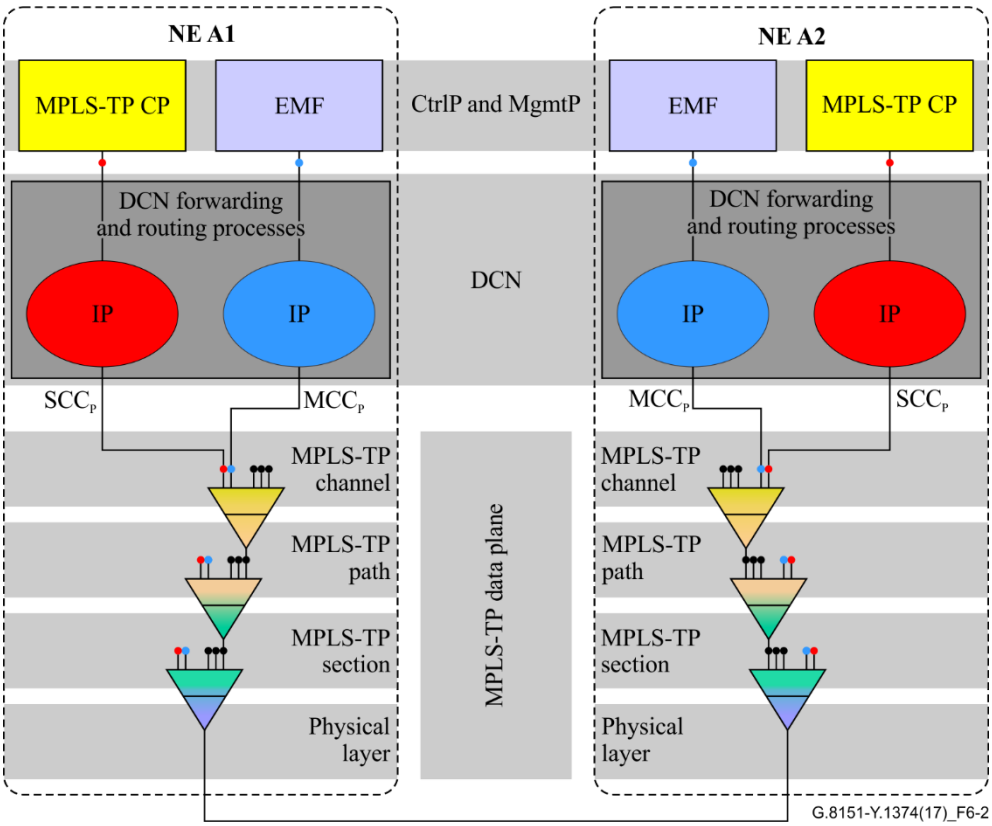

Figure 6-2 – MCCP scenario example 1

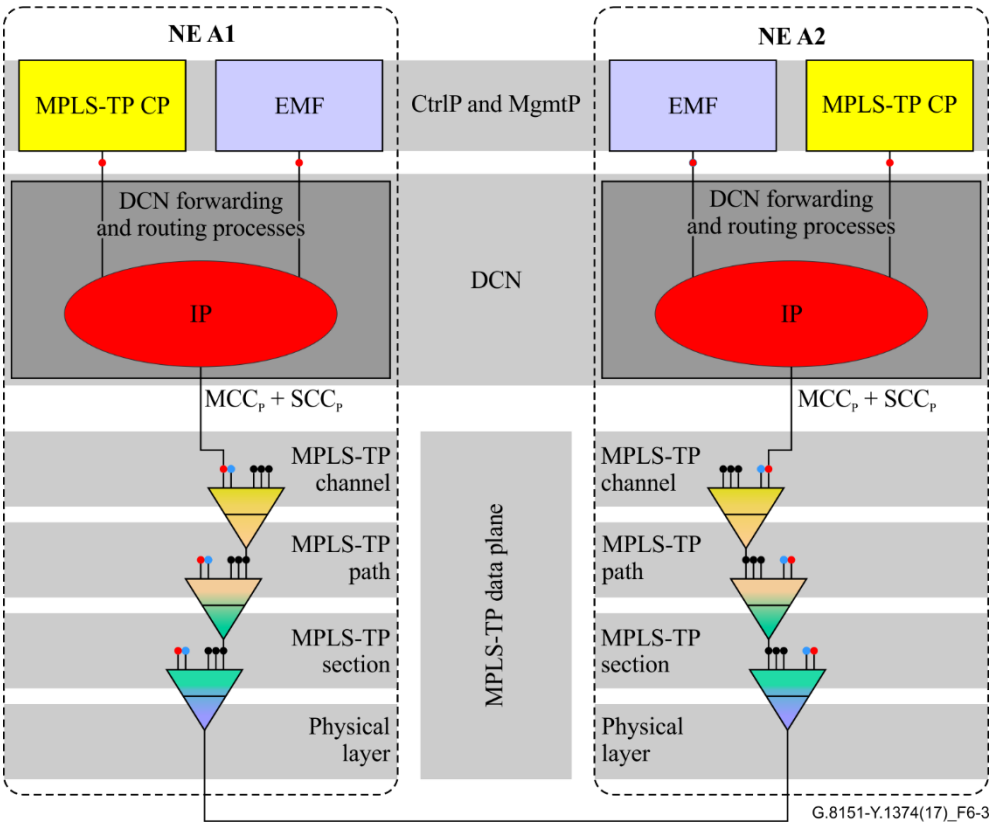

Figure 6-3 – MCCP scenario example 2

Documents
Document Sharing Hub
Full document details: ITU-T G.8151 2020

6.1.4.2 MCC physical characteristics

The MT.S-, MT.C- and MT.P-MCCs are logical elements within the MPLS-TP transport module layer n (MTM-n). The MCC provides general management communications between two MPLS-TP network elements with access to the MT.S, MT.P and MT.C characteristic information respectively. The MT.S-, MT.P-, or MT.C-MCC is provided by the MPLS-TP operations, administration and maintenance (OAM) function at section, path, or channel layer as described in [ITU-T G.7712] or by any other embedded communication channel (ECC) of the MPLS-TP transport network.

The MT.S management communication channel (MCC_S) shall operate as a single message channel between MT.S termination points. The bit rate of the MCC_S shall be configurable.

The MT.P management communication channel (MCC_P) shall operate as a single message channel between any network elements that terminate the MT.P layer. The MCC_P is transported transparently through MT.NEs that only terminates the MT.S layer and forwards the MT.P signal. The bit rate of the MCC_P shall be configurable.

The MT.C management communication channel (MCC_C) shall operate as a single message channel between any network elements that terminate the MT.C layer. The MCC_C is transported transparently through MT.NEs that only terminates the MT.S layer or the MT.S and MT.P layers and forwards the MT.C signal. The bit rate of the MCC_C shall be configurable.

6.1.4.3 MCC data link layer protocol

The MCC data link protocols for management applications are under study for [ITU-T G.7712].

6.1.5 Management of DCN

See clause 6.1.5 of [ITU-T G.7710] for the generic requirements.

6.1.6 Remote log-in

See clause 6.1.6 of [ITU-T G.7710] for the generic requirements.

6.1.7 Relationship between technology domains

See clause 6.1.7 of [ITU-T G.7710] for the generic requirements.

6.2 MPLS-TP equipment management architecture

See clause 6.2 of [ITU-T G.7710] for a generic description of the equipment management architecture.

Figure 6-4, taken from Figure 5 of [ITU-T G.7710], shows the functions inside the MT NE.

Documents
Document Sharing Hub
Full document details: ITU-T G.8151 2020

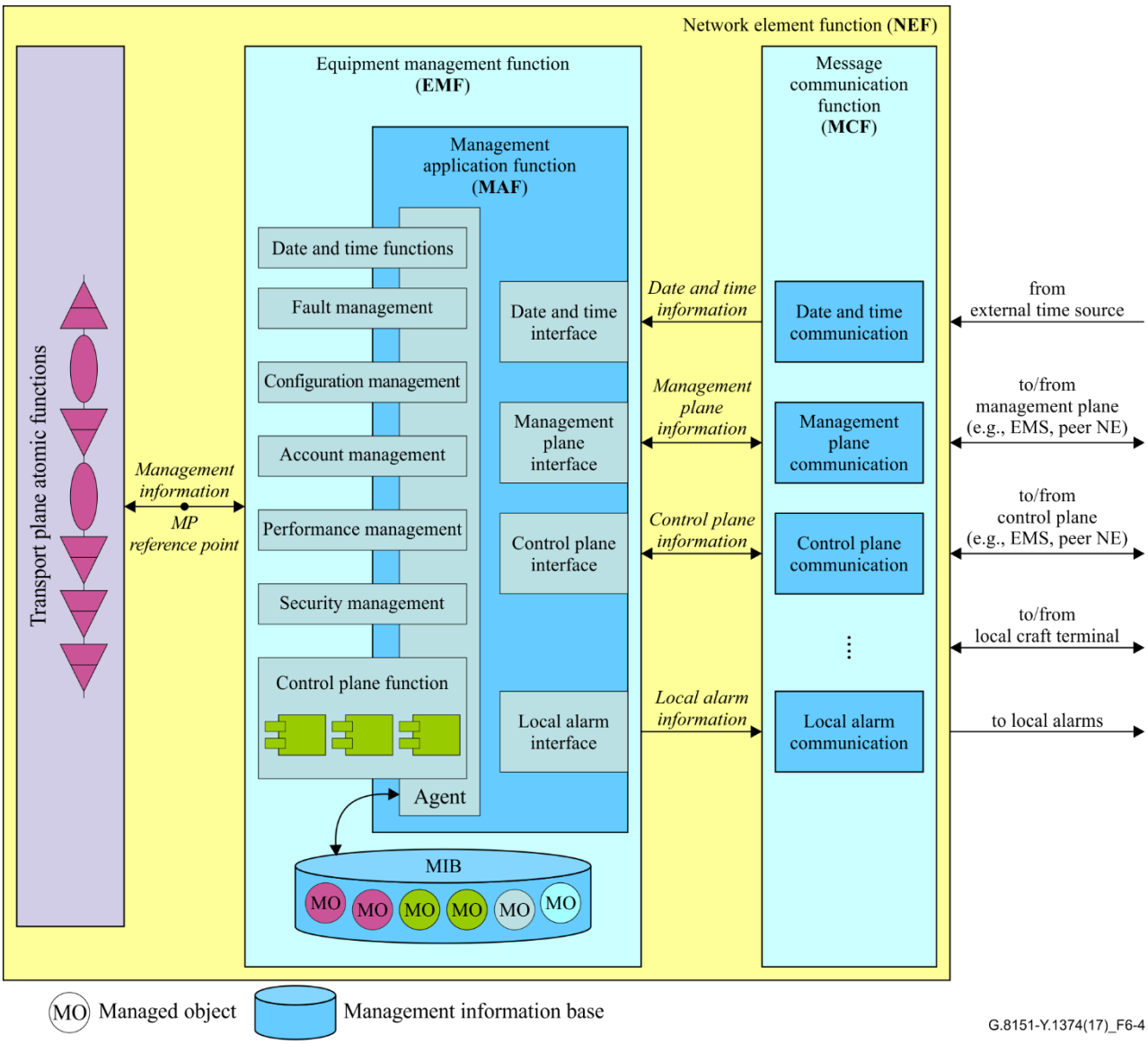

Figure 6-4 – MPLS-TP equipment management function (taken from Figure 5 of [ITU-T G.7710])

6.3 Information flows over management points

See clause 6.3 of [ITU-T G.7710] for the generic description of the information flows over management points (MPs).

The information flow over the MP reference points is described in specific detail for each atomic function in [ITU-T G.8121], [ITU-T G.8121.1] and [ITU-T G.8121.2]. Note that these information flows and associated functions apply equally to both the client and supervisory channel due to the independent nature of these signals. This implies neither that the supervisory channel shall provide all the functions described, nor that [ITU-T G.8121], [ITU-T G.8121.1] and [ITU-T G.8121.2] will provide the details of which functions are available.

7 Fault (maintenance) management

See clause 7 of [ITU-T G.7710] for the generic requirements for fault management. MT-specific specifications, if needed, are explicitly described.

Documents
Document Sharing Hub
Full document details: ITU-T G.8151 2020

7.1 Fault management applications

See clause 7.1 of [ITU-T G.7710] for a description of the basic fault management applications.

7.1.1 Supervision

See clause 7.1.1 of [ITU-T G.7710] for a generic description of the supervision applications.

7.1.1.1 Transmission supervision

See clause 7.1.1.1 of [ITU-T G.7710] for a description of transmission supervision.

For MT.NE, the defects that must be monitored for the purpose of transmission supervision are defined in clause 6.1 of [ITU-T G.8121].

The atomic function associated failure conditions are listed in clause 7.2.1.

7.1.1.2 Quality of service supervision

See clause 7.1.1.2 of [ITU-T G.7710] for a description of quality of service supervision.

7.1.1.3 Processing supervision

See clause 7.1.1.3 of [ITU-T G.7710] for a description of processing supervision.

7.1.1.4 Hardware supervision

See clause 7.1.1.4 of [ITU-T G.7710] for a description of equipment supervision.

7.1.1.5 Environment supervision

See clause 7.1.1.5 of [ITU-T G.7710] for a description of environmental supervision.

7.1.2 Validation

See clause 7.1.2 of [ITU-T G.7710] for a description of fault cause validation.

7.1.3 Alarm handling

7.1.3.1 Severity assignment

See clause 7.1.3.1 of [ITU-T G.7710] for a description of severity categories.

7.1.3.2 Alarm reporting control

See clause 7.1.3.2 of [ITU-T G.7710] for a description of alarm reporting control (ARC).

ARC provides an automatic in-service provisioning capability.

7.1.3.3 Reportable failures

See clause 7.1.3.3 of [ITU-T G.7710] for a description of reportable failures.

7.1.3.4 Alarm reporting

See clause 7.1.3.4 of [ITU-T G.7710] for a description of alarm surveillance.

7.1.3.4.1 Local reporting

See clause 7.1.3.4.1 of [ITU-T G.7710] for a description of local reporting.

7.1.3.4.2 TMN reporting

See clause 7.1.3.4.2 of [ITU-T G.7710] for a description of TMN reporting.

Documents
Document Sharing Hub
Full document details: ITU-T G.8151 2020