International Telecommunication Union

# ITU-T

TELECOMMUNICATION
STANDARDIZATION SECTOR
OF ITU

# G.997.2

**Corrigendum 3**

(08/2017)

SERIES G: TRANSMISSION SYSTEMS AND MEDIA, DIGITAL SYSTEMS AND NETWORKS

Digital sections and digital line system – Metallic access networks

---

## Physical layer management for G.fast transceivers

**Corrigendum 3**

Recommendation ITU-T G.997.2 (2015) – Corrigendum 3

Copyright International Telecommunication Union/ITU Telcommunication Sector
Provided by IHS Markit under license with ITU-T
No reproduction or networking permitted without license from IHS
Full document details: ITU-T G.997.2 CORR 3 2017

Licensee=/, User=,
Not for Resale,

ITU-T G-SERIES RECOMMENDATIONS

**TRANSMISSION SYSTEMS AND MEDIA, DIGITAL SYSTEMS AND NETWORKS**

| | |
|---|---|
| INTERNATIONAL TELEPHONE CONNECTIONS AND CIRCUITS | G.100–G.199 |
| GENERAL CHARACTERISTICS COMMON TO ALL ANALOGUE CARRIER-TRANSMISSION SYSTEMS | G.200–G.299 |
| INDIVIDUAL CHARACTERISTICS OF INTERNATIONAL CARRIER TELEPHONE SYSTEMS ON METALLIC LINES | G.300–G.399 |
| GENERAL CHARACTERISTICS OF INTERNATIONAL CARRIER TELEPHONE SYSTEMS ON RADIO-RELAY OR SATELLITE LINKS AND INTERCONNECTION WITH METALLIC LINES | G.400–G.449 |
| COORDINATION OF RADIOTELEPHONY AND LINE TELEPHONY | G.450–G.499 |
| TRANSMISSION MEDIA AND OPTICAL SYSTEMS CHARACTERISTICS | G.600–G.699 |
| DIGITAL TERMINAL EQUIPMENTS | G.700–G.799 |
| DIGITAL NETWORKS | G.800–G.899 |
| DIGITAL SECTIONS AND DIGITAL LINE SYSTEM | G.900–G.999 |
| General | G.900–G.909 |
| Parameters for optical fibre cable systems | G.910–G.919 |
| Digital sections at hierarchical bit rates based on a bit rate of 2048 kbit/s | G.920–G.929 |
| Digital line transmission systems on cable at non-hierarchical bit rates | G.930–G.939 |
| Digital line systems provided by FDM transmission bearers | G.940–G.949 |
| Digital line systems | G.950–G.959 |
| Digital section and digital transmission systems for customer access to ISDN | G.960–G.969 |
| Optical fibre submarine cable systems | G.970–G.979 |
| Optical line systems for local and access networks | G.980–G.989 |
| **Metallic access networks** | **G.990–G.999** |
| MULTIMEDIA QUALITY OF SERVICE AND PERFORMANCE – GENERIC AND USER-RELATED ASPECTS | G.1000–G.1999 |
| TRANSMISSION MEDIA CHARACTERISTICS | G.6000–G.6999 |
| DATA OVER TRANSPORT – GENERIC ASPECTS | G.7000–G.7999 |
| PACKET OVER TRANSPORT ASPECTS | G.8000–G.8999 |
| ACCESS NETWORKS | G.9000–G.9999 |

*For further details, please refer to the list of ITU-T Recommendations.*

Documents
Document Sharing Hub

Copyright International Telecommunication Union/ITU Telcommunication Sector
Provided by IHS Markit under license with ITU-T
No reproduction or networking permitted without license from IHS
Licensee=/, User=,
Not for Resale,
Full document details: ITU-T G.997.2 CORR 3 2017

# Recommendation ITU-T G.997.2

## Physical layer management for G.fast transceivers

## Corrigendum 3


### Summary

Recommendation ITU-T G.997.2 specifies the physical layer management for fast access to subscriber terminals (G.fast) transmission systems. It specifies managed objects for configuration, fault, status, inventory and performance management.

Amendment 3 includes:

– A new annex for the management of remote power feeding (RPF).

– A new annex for the management of network termination (NT) software upgrades.

– A new annex for the management of Annex X and Annex T of [ITU-T G.9701].

– Updated managed objects to support new profiles 212a, 106c and 212c.

– Updated managed object to support additional international amateur radio (IAR) bands.

Corrigendum 3 includes:

– A correction to the maximal group size of the test parameters for 212 MHz profile.


### History

| Edition | Recommendation | Approval | Study Group | Unique ID* |
|---|---|---|---|---|
| 1.0 | ITU-T G.997.2 | 2015-05-22 | 15 | 11.1002/1000/12375 |
| 1.1 | ITU-T G.997.2 (2015) Cor. 1 | 2016-03-29 | 15 | 11.1002/1000/12800 |
| 1.2 | ITU-T G.997.2 (2015) Amd. 1 | 2016-05-07 | 15 | 11.1002/1000/12555 |
| 1.3 | ITU-T G.997.2 (2015) Amd. 2 | 2016-07-22 | 15 | 11.1002/1000/12799 |
| 1.4 | ITU-T G.997.2 (2015) Cor. 2 | 2016-12-22 | 15 | 11.1002/1000/13067 |
| 1.5 | ITU-T G.997.2 (2015) Amd. 3 | 2017-04-06 | 15 | 11.1002/1000/13066 |
| 1.6 | ITU-T G.997.2 (2015) Cor. 3 | 2017-08-13 | 15 | 11.1002/1000/13311 |


### Keywords

Distribution point unit, DPU, G.fast transceivers, management, performance monitoring.


* To access the Recommendation, type the URL http://handle.itu.int/ in the address field of your web browser, followed by the Recommendation's unique ID. For example, http://handle.itu.int/11.1002/1000/11830-en.


Documents
Document Sharing Hub





Copyright International Telecommunication Union/ITU Telcommunication Sector
Provided by IHS Markit under license with ITU-T
No reproduction or networking permitted without license from IHS
Licensee=/, User=,
Not for Resale,
Full document details: ITU-T G.997.2 CORR 3 2017

## FOREWORD

The International Telecommunication Union (ITU) is the United Nations specialized agency in the field of telecommunications, information and communication technologies (ICTs). The ITU Telecommunication Standardization Sector (ITU-T) is a permanent organ of ITU. ITU-T is responsible for studying technical, operating and tariff questions and issuing Recommendations on them with a view to standardizing telecommunications on a worldwide basis.

The World Telecommunication Standardization Assembly (WTSA), which meets every four years, establishes the topics for study by the ITU-T study groups which, in turn, produce Recommendations on these topics.

The approval of ITU-T Recommendations is covered by the procedure laid down in WTSA Resolution 1.

In some areas of information technology which fall within ITU-T's purview, the necessary standards are prepared on a collaborative basis with ISO and IEC.

## NOTE

In this Recommendation, the expression "Administration" is used for conciseness to indicate both a telecommunication administration and a recognized operating agency.

Compliance with this Recommendation is voluntary. However, the Recommendation may contain certain mandatory provisions (to ensure, e.g., interoperability or applicability) and compliance with the Recommendation is achieved when all of these mandatory provisions are met. The words "shall" or some other obligatory language such as "must" and the negative equivalents are used to express requirements. The use of such words does not suggest that compliance with the Recommendation is required of any party.

## INTELLECTUAL PROPERTY RIGHTS

ITU draws attention to the possibility that the practice or implementation of this Recommendation may involve the use of a claimed Intellectual Property Right. ITU takes no position concerning the evidence, validity or applicability of claimed Intellectual Property Rights, whether asserted by ITU members or others outside of the Recommendation development process.

As of the date of approval of this Recommendation, ITU had received notice of intellectual property, protected by patents, which may be required to implement this Recommendation. However, implementers are cautioned that this may not represent the latest information and are therefore strongly urged to consult the TSB patent database at http://www.itu.int/ITU-T/ipr/.

© ITU 2017

All rights reserved. No part of this publication may be reproduced, by any means whatsoever, without the prior written permission of ITU.



Documents
Document Sharing Hub
Copyright International Telecommunication Union/ITU Telcommunication Sector
Provided by IHS Markit under license with ITU-T
No reproduction or networking permitted without license from IHS
Licensee=/, User=,
Not for Resale,
Full document details: ITU-T G.997.2 CORR 3 2017

## Table of Contents


| | | Page |
|---|---|---|
| 1 | Scope | 1 |
| 2 | References | 1 |
| 3 | Definitions | 1 |
| | 3.1 Terms defined elsewhere | 1 |
| | 3.2 Terms defined in this Recommendation | 2 |
| 4 | Abbreviations and acronyms | 2 |
| 5 | Management architecture | 4 |
| 6 | Network management protocol | 6 |
| 7 | Managed objects | 6 |
| | 7.1 Line configuration objects | 19 |
| | 7.2 Channel configuration objects | 35 |
| | 7.3 Data path configuration objects | 39 |
| | 7.4 Line failures | 39 |
| | 7.5 Channel failures | 40 |
| | 7.6 Data path failures | 40 |
| | 7.7 Line performance monitoring objects | 40 |
| | 7.8 Channel performance monitoring objects | 45 |
| | 7.9 Data path performance monitoring objects | 46 |
| | 7.10 Line test, diagnostics and status objects | 46 |
| | 7.11 Channel test, diagnostics and status objects | 61 |
| | 7.12 Data path test, diagnostics and status objects | 65 |
| | 7.13 Inventory objects | 65 |
| | 7.14 Link State related managed objects | 68 |
| 8 | Procedures for performance monitoring functions | 70 |
| | 8.1 Line transmission states | 70 |
| | 8.2 Threshold reports | 70 |
| | 8.3 Unavailable and available state filters | 71 |
| | 8.4 TR1 filter | 71 |
| | 8.5 TR2 filter | 71 |
| | 8.6 Evaluation of TR1 | 71 |
| | 8.7 Evaluation of TR2 | 72 |
| | 8.8 Threshold report evaluation during transmission state changes | 72 |
| | 8.9 Performance history storage in network elements | 72 |
| | 8.10 Register size | 72 |
| | 8.11 Parameter counts | 73 |




Documents
Document Sharing Hub
Copyright International Telecommunication Union/ITU Telcommunication Sector
Provided by IHS Markit under license with ITU-T
No reproduction or networking permitted without license from IHS
Licensee=/, User=,
Not for Resale,
Full document details: ITU-T G.997.2 CORR 3 2017

Page


8.12 Date/time-stamping of reports ..... 73
8.13 Inhibiting performance monitoring parameters ..... 73

Annex A – Physical layer management for reverse power feeding (RPF) of remote access equipment ..... 74
A.1 Scope ..... 74
A.2 References ..... 74
A.3 Definitions ..... 74
A.4 Abbreviations and acronyms ..... 74
A.5 DPU and NT management architecture ..... 75
A.6 Network management protocol ..... 75
A.7 DPU Northbound managed objects ..... 79

Annex B to Annex R ..... 85

Annex S – Management for network termination (NT) software upgrade process ..... 86
S.1 Scope ..... 86
S.2 References ..... 86
S.3 Definitions ..... 86
S.4 Abbreviations and acronyms ..... 86
S.5 DPU management architecture ..... 86
S.6 Network management protocol ..... 86
S.7 Managed objects ..... 86

Annex T – Annex X and Annex T of ITU-T G.9701 – Managed objects ..... 91
T.1 Overview of Annex X and Annex T of ITU-T G.9701 managed objects ..... 91
T.2 Annex X and Annex T of [ITU-T G.9701] control objects ..... 92
T.3 Annex X and Annex T of ITU-T G.9701 status objects ..... 93
T.4 Annex X and Annex T of ITU-T G.9701 inventory objects ..... 94

Annex U to Annex W ..... 95

Annex X – Cross-layer link state objects ..... 96
X.1 Overview of cross-layer link state objects ..... 96
X.2 Cross-Layer Low power Mode Control ..... 96

Appendix I – Broadband Forum considerations on the FTTdp deployment scenario ..... 101

Bibliography ..... 102




Documents
Document Sharing Hub
Copyright International Telecommunication Union/ITU Telcommunication Sector
Provided by IHS Markit under license with ITU-T
No reproduction or networking permitted without license from IHS
Licensee=/, User=,
Not for Resale,
Full document details: ITU-T G.997.2 CORR 3 2017

# Recommendation ITU-T G.997.2

## Physical layer management for G.fast transceivers

## Corrigendum 3

*Editorial note: This is a complete-text publication. The modifications introduced by this corrigendum are shown in revision marks relative to Recommendation ITU-T G.997.2 (2015) plus its Cor.1 (2016), Cor.2 (2016). Amd.1 (2016), Amd.2 (2016) and Amd 3 (2017).*

### 1 Scope

This Recommendation specifies the physical layer management for fast access to subscriber terminals (G.fast) transmission systems.

It specifies managed objects for configuration, fault, status, inventory and performance management. The list of managed objects applies at the distribution point unit-Northbound (DPU-NB) interface, relating to the "DPU-MIB" nomenclature used in [ITU-T G.9701]. The managed objects are defined to provide, at least, all the information necessary for translation into a YANG data model [b-IETF RFC 6020], although this does not exclude translation to other formats such as an abstract syntax notation one (ASN.1) (ITU-T X.680 series) management information base (MIB) description used in connection with the simple network management protocol (SNMP) [b-IETF RFC 1157]. The definition of the YANG data model for G.fast-managed objects is outside the scope of this Recommendation.

### 2 References

The following ITU-T Recommendations and other references contain provisions which, through reference in this text, constitute provisions of this Recommendation. At the time of publication, the editions indicated were valid. All Recommendations and other references are subject to revision; users of this Recommendation are therefore encouraged to investigate the possibility of applying the most recent edition of the Recommendations and other references listed below. A list of the currently valid ITU-T Recommendations is regularly published. The reference to a document within this Recommendation does not give it, as a stand-alone document, the status of a Recommendation.


[ITU-T G.994.1] Recommendation ITU-T G.994.1 (2012), *Handshake procedures for digital subscriber line transceivers*.

[ITU-T G.9700] Recommendation ITU-T G.9700 (2014), *Fast access to subscriber terminals (G.fast) – Power spectral density specification*.

[ITU-T G.9701] Recommendation ITU-T G.9701 (2014), *Fast access to subscriber terminals (G.fast) – Physical layer specification*.


### 3 Definitions

#### 3.1 Terms defined elsewhere

This Recommendation uses the following terms defined elsewhere:

**3.1.1 managed resource** [b-ITU-T M.3010]: The abstraction of those aspects of a telecommunication resource (logical or physical) required for telecommunications management.




Documents
Document Sharing Hub
Copyright International Telecommunication Union/ITU Telcommunication Sector
Provided by IHS Markit under license with ITU-T
No reproduction or networking permitted without license from IHS
Licensee=/, User=,
Not for Resale,
Full document details: ITU-T G.997.2 CORR 3 2017

## 3.2 Terms defined in this Recommendation

This Recommendation defines the following terms:

**3.2.1 AdminStatus**: (Based on clause 12.1.1.7 of [ITU-T G.9701]) The AdminStatus represents the configured, desired state of the interface. The AdminStatus "up" is equivalent with the interface "enabled=true", where the desired link state is L0, L2.1N, L2.1B, or L2.2. The AdminStatus "down" is equivalent with the interface "enabled=false", where the desired link state is L3.

NOTE – The relation between the AdminStatus ("up" or "down") and the interface (enabled="true" or "false") is defined in the IETF YANG Data Model for Interface Management [b-IETF RFC 7223].

**3.2.2 anomaly**: A discrepancy between the actual and desired characteristics of an item.

The desired characteristic may be expressed in the form of a specification.

An anomaly may or may not affect the ability of an item to perform a required function.

**3.2.3 defect**: A limited interruption in the ability of an item to perform a required function. It may or may not lead to maintenance action depending on the results of additional analysis.

Successive anomalies causing a decrease in the ability of an item to perform a required function are considered a defect.

**3.2.4 empty array**: An array whose number of elements is zero.

**3.2.5 failure**: A termination of the ability of an item to perform a required function.

NOTE – After failure, the item has a fault. Analysis of successive anomalies or defects affecting the same item can lead to the item being considered as "failed".

**3.2.6 managed object**: The management view of a managed resource.

**3.2.7 DPU-NB interface**: The interface between the persistent management agent and the management entity of the distribution point unit.

# 4 Abbreviations and acronyms

This Recommendation uses the following abbreviations and acronyms:

| | |
|---|---|
| ASN.1 | Abstract Syntax Notation one |
| CV | Code Violation |
| CV-C | Code Violation – Channel |
| DPU | Distribution Point Unit |
| DPU-NB | DPU Northbound |
| DRA | Dynamic Resource Allocation |
| ES | Errored Second |
| FAST | Fast Access to Subscriber Terminals |
| FE | Far-End |
| FRA | Fast Rate Adaptation |
| FTTdp | Fibre To The distribution point |
| FTTx | Fibre To The x |
| FTU | FAST Transceiver Unit |
| FTU-O | FAST Transceiver Unit – Central office end (i.e., network operator end of the loop) |
| FTU-R | FAST Transceiver Unit – Remote side (i.e., subscriber end of the loop) |



Documents
Document Sharing Hub
Copyright International Telecommunication Union/ITU Telcommunication Sector
Provided by IHS Markit under license with ITU-T
No reproduction or networking permitted without license from IHS
Licensee=/, User=,
Not for Resale,
Full document details: ITU-T G.997.2 CORR 3 2017

| | |
|---|---|
| GDR | Gamma Data Rate |
| G.fast | fast access to subscriber terminals |
| LOM | Loss of Margin |
| LOM-FE | Far-End Loss of Margin |
| LOR | Loss of RMC |
| LOR-FE | Far-End Loss of RMC |
| LORS | LOR Second |
| LOS | Loss of Signal |
| LOS-FE | Far-End Loss of Signal |
| LOSS | LOS Second |
| LPR | Loss of Power |
| LPR-FE | Far-End Loss of Power |
| MIB | Management Information Base |
| MDU | Multi-Dwelling Unit |
| ME | Management Entity |
| NDR | Net Data Rate |
| NDRds | downstream Net Data Rate |
| NDRus | upstream Net Data Rate |
| NE | Network Element |
| NMS | Network Management System |
| NT | Network Termination |
| OLR | On-Line Reconfiguration |
| OSS | Operations Support Systems |
| PM | Performance Monitoring |
| PMA | Persistent Management Agent |
| PMD | Physical Media Dependent |
| PMS-TC | Physical Media Specific – Transmission Convergence |
| PSD | Power Spectral Density |
| REIN | Repetitive Electrical Impulse Noise |
| RMC | Robust Management Channel |
| RPA | RMC Parameter Adjustment |
| SES | Severely Errored Second |
| SNMP | Simple Network Management Protocol |
| SNR | Signal-to-Noise Ratio |
| SRA | Seamless Rate Adaptation |
| TDD | Time Division Multiplexing |
| TPS-TC | Transport Protocol Specific – Transmission Convergence |



Documents
Document Sharing Hub
Copyright International Telecommunication Union/ITU Telcommunication Sector
Provided by IHS Markit under license with ITU-T
No reproduction or networking permitted without license from IHS
Licensee=/, User=,
Not for Resale,
Full document details: ITU-T G.997.2 CORR 3 2017

| | |
|---|---|
| TR | Threshold Report |
| UAS | UnAvailable Second |
| U-O | Loop interface – Central office end |
| U-R | Loop interface – Remote side (i.e., subscriber end of the loop) |

## 5 Management architecture

The management of an access node (AN) or a distribution point unit (DPU) is performed by the network management system (NMS), passing management information over the Q reference point to each AN's management entity (ME) (see Figure 5-1a) or through a persistent management gent (PMA) to the each DPU's ME (see Figure 5-1b). The NMS may also monitor each G.fast transceiver unit – remote side (FTU-R) via the related network termination's (NT's) ME and G reference point. The connection between the ME functions at the AN or DPU and at the NT is established over management channels provided by the G.fast transceiver unit – central office ends (FTU-Os) and FTU-Rs via the copper pairs.

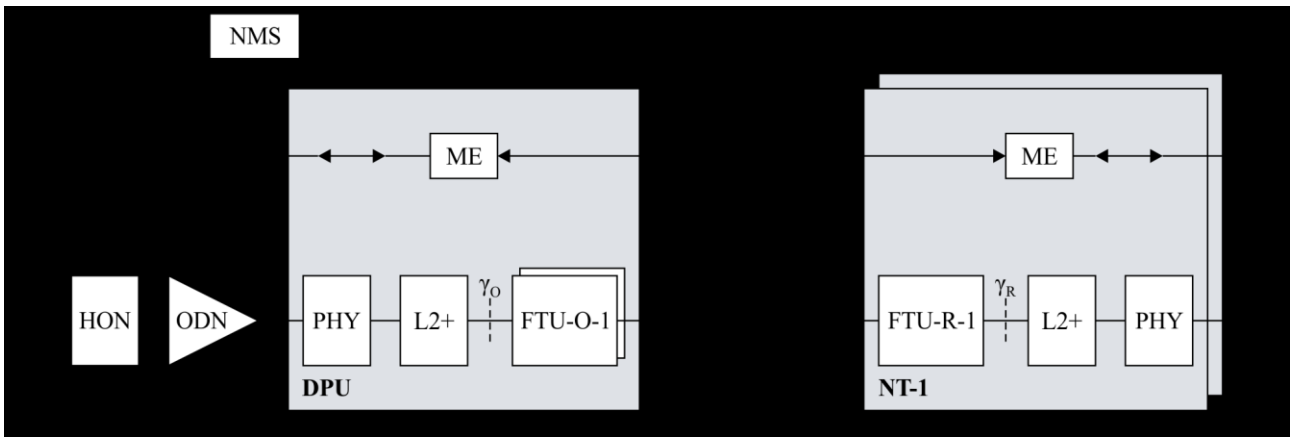


**Figure 5-1a – Reference model of traditional AN deployment (shown for line 1 in all N lines (N≥1) connected to an AN)**

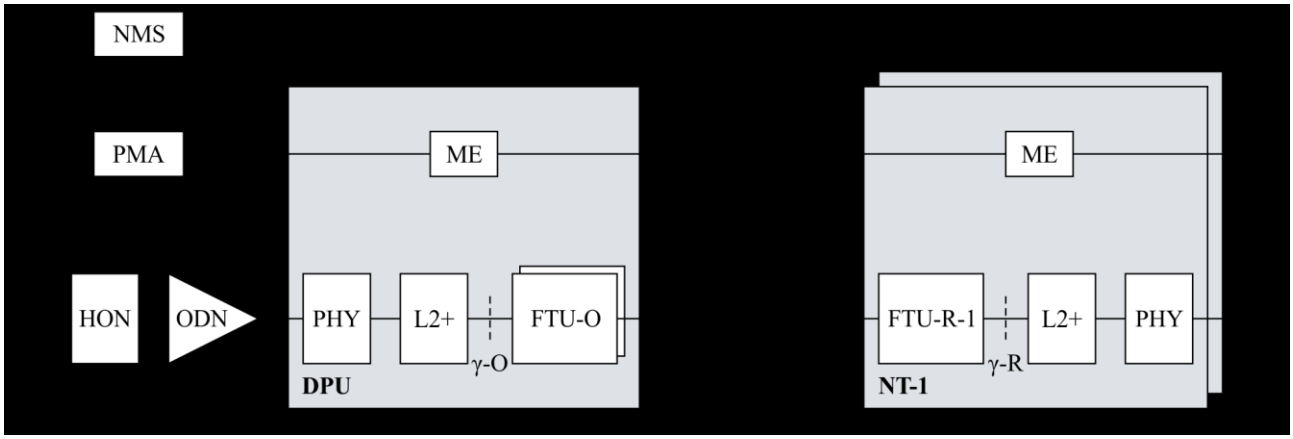


**Figure 5-1b – Reference model of FTTdp deployment with PMA and DPU (shown for line 1 in all N lines (N>=1) connected to a DPU)**



Copyright International Telecommunication Union/ITU Telcommunication Sector
Provided by IHS Markit under license with ITU-T
No reproduction or networking permitted without license from IHS
Licensee=/, User=,
Not for Resale,
Full document details: ITU-T G.997.2 CORR 3 2017

Appendix I contains additional information regarding the Broadband Forum considerations on the fibre to the distribution point (FTTdp) deployment scenario (see also [b-BBF TR-301]).

The fundamental purpose of the PMA (see Appendix I) is to allow the operations support systems (OSS)/NMS to perform all operations on a given DPU whether or not that DPU is actually powered. This includes the following PMA functionality:

- firmware download and management;
- initial provisioning;
- configuration, including rate control;
- test and diagnostics;
- statistics gathering;
- event reporting;
- performance monitoring (PM) history beyond current and previous interval counters;
- management protocol translation between Q interface and the DPU-Northbound interface (DPU-NB interface).

Some of these operations have limited capabilities when the DPU is without power. For example, statistics gathering is limited to the history present in the PMA, since the current information is not available from the DPU.

The OSS/NMS also still needs to be able to ascertain the true power state of the DPU as a whole, and of each given line, for example for diagnostics purposes. It can choose to take into account the power state of a DPU for various processes, e.g., a new firmware download, but does not have to.

While distribution points are at locations where local power is typically not available, DPUs may also be deployed at locations where local powering or forward powering is available (e.g., in multi-dwelling unit (MDU) basements or in fibre to the x (FTTx) cabinets). In this case, a PMA could still exist as a separate entity to the DPU (if the DPU could still be unpowered at times).

[ITU-T G.9701] defines the interfaces between the FTU-O (which is part of the AN or DPU) and the FTU-R (which is part of the NT). This Recommendation specifies the physical layer management for fast access to subscriber terminals (G.fast) transmission systems as seen by the NMS (if the FTU-O is in an AN, see Figure 5-1a) and as seen by the PMA (if the FTU-O is in a DPU, see Figure 5-1b).

Clause 7 and 8 specifies managed objects for configuration, fault, test, diagnostics, status, and inventory management, and for performance monitoring. The list of managed objects applies at the DPU-NB interface shown in Figure 5-1b, relating to the "DPU-MIB" naming as used in [ITU-T G.9701]. The managed objects are defined to provide at least all the information necessary for translation into a YANG data model [b-IETF RFC 6020], although this does not exclude translation to other formats such as an ASN.1 (X.680 series) MIB description used in connection with SNMP [b-IETF RFC 1157].

The definitions of the managed objects defined in clause 7 provide the following information:

- description;
- type;
- unit;
- valid values;
- default value (for configuration objects only);
- reference.

The list of managed objects defined in clauses 7 and 8 also applies at the Q reference point shown in Figure 5-1a.



Documents
Document Sharing Hub
Copyright International Telecommunication Union/ITU Telcommunication Sector
Provided by IHS Markit under license with ITU-T
No reproduction or networking permitted without license from IHS
Licensee=/, User=,
Not for Resale,
Full document details: ITU-T G.997.2 CORR 3 2017

## 6 Network management protocol

This Recommendation makes no presumption about which management protocol is used between the NMS and the AN (see Figure 5-1a) or between the PMA and the DPU (see Figure 5-1b) for transport of the G.fast-managed objects.

## 7 Managed objects

The list of managed objects contains six types of information:

1) configuration objects;
2) fault monitoring – failures (alarm indications);
3) fault monitoring – threshold crossing (alert messages);
4) performance monitoring objects (counters);
5) test, diagnostic and status objects;
6) inventory objects.

Figure 7-1 shows the in-service performance monitoring process. The primitives are specified in [ITU-T G.9701].

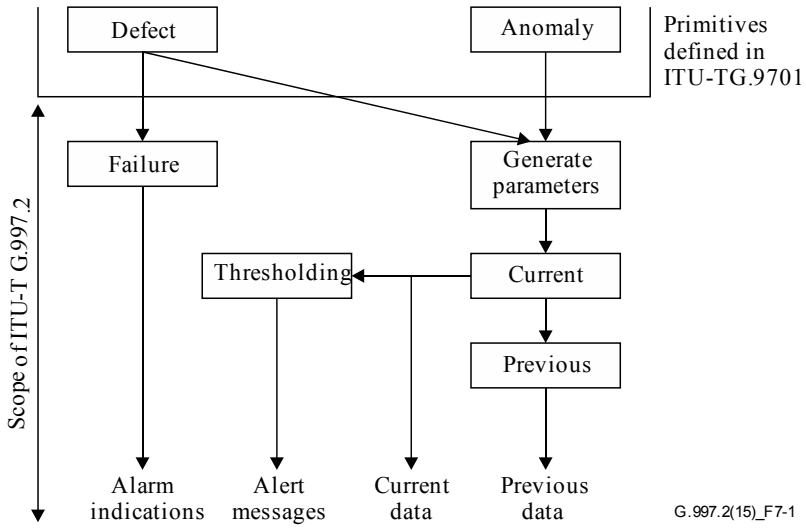


**Figure 7-1 – In-service performance monitoring process**

As [ITU-T G.9701] supports a DPU with up to 128 lines, provisioning every managed object for every G.fast port on the DPU may become burdensome. Therefore, the DPU configuration management (as defined in the Broadband Forum) defines G.fast configuration profiles, as well as a mechanism to associate these profiles to the individual ports. The definition of G.fast configuration profiles is outside the scope of this Recommendation. The allocation of the individual G.fast-managed objects (as defined in this Recommendation) to G.fast configuration profiles is addressed within the scope of the Broadband Forum.

NOTE – The "configuration profiles" are not the "Profiles" discussed in clause 6 of [ITU-T G.9701]. This clause uses the term "profile" for simplifying the configuration of [ITU-T G.9701] ports on a DPU in the field. Clause 6 of [ITU-T G.9701] is a discussion of a technique for defining the native capabilities (e.g., the particular subset of [ITU-T G.9701]) supported by a particular G.fast transceiver.

At the DPU-NB interface, a line is configured through the following information:

- line configuration objects (see Table 7-1) for the line;
- channel configuration objects (see Table 7-2) for the downstream channel;



Documents
Document Sharing Hub
Copyright International Telecommunication Union/ITU Telcommunication Sector
Provided by IHS Markit under license with ITU-T
No reproduction or networking permitted without license from IHS
Licensee=/, User=,
Not for Resale,
Full document details: ITU-T G.997.2 CORR 3 2017

- channel configuration objects (see Table 7-2) for the upstream channel;
- data path configuration objects (see Table 7-3) for the downstream data path;
- data path configuration objects (see Table 7-3) for the upstream data path.

Line configuration objects relate to the physical media dependent (PMD) sublayer and the robust management channel (RMC). Channel configuration objects relate to the bearer channel-related aspects of the physical media specific – transmission convergence (PMS-TC) sublayer. Data path configuration objects relate to the transport protocol specific – transmission convergence (TPS-TC) sublayer.

At the DPU-NB interface, a line is monitored through the following information:

- line failures (see Table 7-4);
- channel failures (see Table 7-5);
- data path failures (see Table 7-6);
- line performance monitoring objects (see Table 7-7);
- channel performance monitoring objects (see Table 7-8) for the downstream channel;
- channel performance monitoring objects (see Table 7-8) for the upstream channel;
- data path performance monitoring objects (see Table 7-9) for the downstream data path;
- data path performance monitoring objects (see Table 7-9) for the upstream data path;
- line test, diagnostics and status objects (see Table 7-10);
- channel test, diagnostics and status objects (see Table 7-11) for the downstream channel;
- channel test, diagnostics and status objects (see Table 7-11) for the upstream channel;
- data path test, diagnostic and status objects (see Table 7-12) for the downstream channel;
- data path test, diagnostic and status objects (see Table 7-12) for the upstream channel;
- inventory objects (see Table 7-13).

As [ITU-T G.9701] supports a DPU with up to 128 lines, maintaining the performance monitoring and the test, diagnostic and status information for every line may become burdensome. Although access to all mandatory managed objects shall be supported at all times for all ports on the DPU at the DPU-NB interface towards the PMA (see Figure 5-1), the objects may not be maintained within the management entity of the DPU simultaneously for all lines at all times. Although reasonable performance shall be provided at the DPU-NB interface for access to the managed objects of any line, this Recommendation does not define specific performance requirements at this interface.

When the update request flag for a test parameter group (see clause 7.1.9) is set (its value is changed from 0 to 1), the parameters of the associated test parameter groups shall be updated in the DPU-MIB within the update time period specified in Table 7-0. The update request flag for the associated test parameter group is defined in the DPU–MIB and is independent of any autonomous update process in the system. The update request flag shall be reset (its value changed back to 0) by the DPU after the request parameter update is complete. The reset shall be within a period that is shorter than the reset time period specified in Table 7-0 to allow reception of another update request. The reset time period starts since the last time the update request flag was set (externally or by an autonomous process in the system). This applies only to the elements maintained in the DPU.

Test parameters and status parameters shall be updated in L0, L2.1N, L2.1B and L2.2 link states, unless explicitly stated differently in [ITU-T G.9701]. The GDRds/us and ATTGDRds/us shall be updated only in L0 state.



Documents
Document Sharing Hub
Copyright International Telecommunication Union/ITU Telcommunication Sector
Provided by IHS Markit under license with ITU-T
No reproduction or networking permitted without license from IHS
Full document details: ITU-T G.997.2 CORR 3 2017
Licensee=/, User=,
Not for Resale,

**Table 7-0 – Test parameter groups**

| Test parameter group (Note) | Update time period | Reset time period |
|---|---|---|
| NE test parameter group 1 (NE-G1) | 10 seconds | 3 minutes |
| FE test parameter group 1 (FE-G1) | 15 seconds | 3 minutes |
| NE test parameter group 2 (NE-G2) | 3 minutes | 10 minutes |
| FE test parameter group 2 (FE-G2) | 3 minutes | 10 minutes |
| NOTE – The test parameters contained in each test parameter group are defined in Table 7-10 and Table 7-11. | | |

Tables 7-1 to 7-11 indicate the status of each managed object over the DPU-NB interface:

- R: Read only
- W: Write only
- R/W: Read and write
- (M): Mandatory
- (O): Optional

Entries in Tables 7-1 to 7-11 labelled with names containing the separator "/" represent multiple objects whose names are obtained by considering all combinations of the elements isolated with the separator. For example, the entry labelled with the name A/B_C/D_E/F represents eight objects with names A_C_E, A_C_F, A_D_E, A_D_F, B_C_E, B_C_F, B_D_E, B_D_F. Also, the entry labelled with the name Ads/us represents two objects with names Ads and Aus. Near-end (-NE) objects apply to the FTU-O, while far-end (-FE) objects apply to the FTU-R.

For each configuration managed object, a default value is defined. Configuring a managed object with a value different from the default may change the applicable valid values of other managed objects and therefore may require reconfiguration of these objects.

**Table 7-1 – Line configuration objects**

| Category/object | Defined in clause: | DPU-NB interface |
|---|---|---|
| ***Profiles*** | | |
| [ITU-T G.9701] profiles enabling (PROFILES) | 7.1.0.1 | R/W (M) |
| ***Time division Duplexing (TDD)*** | | |
| Symbol periods per TDD frame (MF) | 7.1.1.1 | R/W (M) |
| Symbol periods per TDD frame dedicated for downstream transmission (Mds) | 7.1.1.2 | R/W (M) |
| Cyclic extension (CE) | 7.1.1.3 | R/W (M) |
| ***Power and spectrum usage*** | | |
| MAXATPds | 7.1.2.1 | R/W (M) |
| MAXATPus | 7.1.2.2 | R/W (M) |
| CARMASKds | 7.1.2.3 | R/W (M) |
| CARMASKus | 7.1.2.4 | R/W (M) |
| MIBPSDMASKds | 7.1.2.5 | R/W (M) |
| MIBPSDMASKus | 7.1.2.6 | R/W (M) |
| RFIBANDS | 7.1.2.7 | R/W (M) |



Documents
Document Sharing Hub
Copyright International Telecommunication Union/ITU Telcommunication Sector
Provided by IHS Markit under license with ITU-T
No reproduction or networking permitted without license from IHS
Licensee=/, User=,
Not for Resale,
Full document details: ITU-T G.997.2 CORR 3 2017

**Table 7-1 – Line configuration objects**

| Category/object | Defined in clause: | DPU-NB interface |
|---|---|---|
| IARBANDS | 7.1.2.8 | R/W (M) |
| UPBOPSDA | 7.1.2.9 | R/W (M) |
| UPBOPSDB | 7.1.2.10 | R/W (M) |
| UPBOKL | 7.1.2.11 | R/W (M) |
| UPBOKLF | 7.1.2.12 | R/W (M) |
| UPBOKLREF | 7.1.2.13 | R/W (M) |
| ***Noise margins*** | | |
| TARSNRMds | 7.1.3.1 | R/W (M) |
| TARSNRMus | 7.1.3.2 | R/W (M) |
| MAXSNRMus | 7.1.3.3 | R/W (M) |
| MINSNRMds | 7.1.3.4 | R/W (M) |
| MINSNRMus | 7.1.3.5 | R/W (M) |
| ***Seamless rate adaptation (SRA)*** | | |
| SRA-USNRMds | 7.1.4.1 | R/W (M) |
| SRA-UTIMEds | 7.1.4.2 | R/W (M) |
| SRA-USNRMus | 7.1.4.3 | R/W (M) |
| SRA-UTIMEus | 7.1.4.4 | R/W (M) |
| SRA-DSNRMds | 7.1.4.5 | R/W (M) |
| SRA-DTIMEds | 7.1.4.6 | R/W (M) |
| SRA-DSNRMus | 7.1.4.7 | R/W (M) |
| SRA-DTIMEus | 7.1.4.8 | R/W (M) |
| ***Fast rate adaptation (FRA)*** | | |
| FRA-TIMEds | 7.1.5.1 | R/W (M) |
| FRA-TIMEus | 7.1.5.2 | R/W (M) |
| FRA-NTONESds | 7.1.5.3 | R/W (M) |
| FRA-NTONESus | 7.1.5.4 | R/W (M) |
| FRA-RTXUCds | 7.1.5.5 | R/W (M) |
| FRA-RTXUCus | 7.1.5.6 | R/W (M) |
| FRA-VENDISCds | 7.1.5.7 | R/W (M) |
| FRA-VENDISCus | 7.1.5.8 | R/W (M) |
| ***Robust management channel (RMC)*** | | |
| TARSNRM-RMCds | 7.1.6.1 | R/W (M) |
| TARSNRM-RMCus | 7.1.6.2 | R/W (M) |
| MINSNRM-RMCds | 7.1.6.3 | R/W (M) |
| MINSNRM-RMCus | 7.1.6.4 | R/W (M) |
| MAXBL-RMCds | 7.1.6.5 | R/W (M) |
| MAXBL-RMCus | 7.1.6.6 | R/W (M) |



Documents
Document Sharing Hub
Copyright International Telecommunication Union/ITU Telcommunication Sector
Provided by IHS Markit under license with ITU-T
No reproduction or networking permitted without license from IHS
Licensee=/, User=,
Not for Resale,
Full document details: ITU-T G.997.2 CORR 3 2017

**Table 7-1 – Line configuration objects**

| Category/object | Defined in clause: | DPU-NB interface |
|---|---|---|
| ***Vectoring*** | | |
| FEXT cancellation enabling/disabling downstream (FEXT_TO_CANCEL_ENABLEds) | 7.1.7.1 | R/W (M) |
| FEXT cancellation enabling/disabling upstream (FEXT_TO_CANCEL_ENABLEus) | 7.1.7.2 | R/W (M) |
| XLOG requested subcarrier group size (XLOGREQds) | 7.1.7.3 | R/W (O) |
| XLOG requested disturber index (XLOGDREQds) | 7.1.3.4 | R/W (O) |
| ***Fast-retrain policy*** | | |
| LOS-PERSISTENCYds | 7.1.8.1 | R/W (M) |
| LOS-PERSISTENCYus | 7.1.8.2 | R/W (M) |
| LOM-PERSISTENCYds | 7.1.8.3 | R/W (M) |
| LOM-PERSISTENCYus | 7.1.8.4 | R/W (M) |
| LOR-PERSISTENCYds | 7.1.8.5 | R/W (M) |
| LOR-PERSISTENCYus | 7.1.8.6 | R/W (M) |
| REINIT_TIME_THRESHOLDds | 7.1.8.7 | R/W (M) |
| REINIT_TIME_THRESHOLDus | 7.1.8.8 | R/W (M) |
| LOW_ETR_THRESHOLDds | 7.1.8.9 | R/W (M) |
| LOW_ETR_THRESHOLDus | 7.1.8.10 | R/W (M) |
| ***Update test parameters request*** | | |
| UPDATE-NE-TEST | 7.1.9.1 | R/W (M) |
| UPDATE-FE-TEST | 7.1.9.2 | R/W (M) |
| ***Low power modes*** | | |
| L2-TARSNRMds/us | 7.1.10.1 | R/W (M) |
| L2.1-MAXSNRMds/us | 7.1.10.2 | R/W (M) |
| L2-MAXPSDR | 7.1.10.3 | R/W (M) |
| L2.1-SRA-USNRMds | 7.1.10.4 | R/W(M) |
| L2.1-SRA-USNRMus | 7.1.10.5 | R/W(M) |
| L2.1-SRA-DSNRMds | 7.1.10.6 | R/W(M) |
| L2.1-SRA-DSNRMus | 7.1.10.7 | R/W(M) |


Copyright International Telecommunication Union/ITU Telcommunication Sector
Provided by IHS Markit under license with ITU-T
No reproduction or networking permitted without license from IHS
Licensee=/, User=,
Not for Resale,
Full document details: ITU-T G.997.2 CORR 3 2017

**Table 7-2 – Channel configuration objects**

| Category/object | Defined in clause: | DPU-NB interface |
|---|---|---|
| ***Data rate (downstream/upstream)*** | | |
| Maximum net data rate (NDR) (MAXNDR ds/us) | 7.2.1.1 | R/W (M) |
| Minimum expected throughput (MINETRds/us) | 7.2.1.2 | R/W (M) |
| Maximum gamma data rate (GDR) (MAXGDRds/us) | 7.2.1.3 | R/W (M) |
| Minimum gamma data rate (MINGDRds/us) | 7.2.1.4 | R/W (M) |
| ***Retransmission (downstream/upstream)*** | | |
| DELAYMAXds/us | 7.2.2.1 | R/W (M) |
| INPMIN_SHINEds/us | 7.2.2.2 | R/W (M) |
| SHINERATIOds/us | 7.2.2.3 | R/W (M) |
| INPMIN_REINds/us | 7.2.2.4 | R/W (M) |
| IAT_REINds/us | 7.2.2.5 | R/W (M) |
| RNRATIOds/us | 7.2.2.6 | R/W (M) |
| RTX_TESTMODE | 7.2.2.7 | R/W (M) |
| **Low power modes** | | |
| L2.1-MAXNDRds/us | 7.2.3.1 | R/W (M) |
| L2.2-MAXNDR | 7.2.3.2 | R/W (M) |
| L2.1-MINETRds/us | 7.2.3.3 | R/W (M) |
| L2.2-MINETR | 7.2.3.4 | R/W (M) |
| L2.1-MINETR-EXITds/us | 7.2.3.5 | R/W (M) |

**Table 7-3 – Data path configuration objects**

| Category/object | Defined in clause: | DPU-NB interface |
|---|---|---|
| TPS_TESTMODE | 7.3.1 | R/W (M) |
| DRA_TESTMODE | 7.3.2 | R/W (M) |

**Table 7-4 – Line failures**

| Category/object | Defined in clause: | DPU-NB interface |
|---|---|---|
| ***Near-end (FTU-O) failures*** | | |
| Loss of signal (LOS) | 7.4.1.1 | R (M) |
| Loss of margin (LOM) | 7.4.1.2 | R (M) |
| Loss of RMC (LOR) | 7.4.1.3 | R (M) |
| Loss of power (LPR) | 7.4.1.4 | R (M) |
| ***Far-end (FTU-R) failures*** | | |
| Far-end loss of signal (LOS-FE) failure | 7.4.2.1 | R (M) |



Documents
Document Sharing Hub
Copyright International Telecommunication Union/ITU Telcommunication Sector
Provided by IHS Markit under license with ITU-T
No reproduction or networking permitted without license from IHS
Licensee=/, User=,
Not for Resale,
Full document details: ITU-T G.997.2 CORR 3 2017

**Table 7-4 – Line failures**

| Category/object | Defined in clause: | DPU-NB interface |
|---|---|---|
| Far-end loss of margin (LOM-FE) failure | 7.4.2.2 | R (M) |
| Far-end loss of RMC (LOR-FE) failure | 7.4.2.3 | R (M) |
| Far-end loss of power (LPR-FE) failure | 7.4.2.4 | R (M) |
| ***Initialization failures*** | | |
| Line init (LINIT) failure | 7.4.3.1 | R (M) |

**Table 7-5 – Channel failures**

| Category/object | Defined in clause: | DPU-NB interface |
|---|---|---|
| ***Near-end (FTU-O) failures*** | | |
| | | |
| ***Far-end (FTU-R) failures*** | | |
| | | |

**Table 7-6 – Data path failures**

| Category/object | Defined in clause: | DPU-NB interface |
|---|---|---|
| ***Near-end (FTU-O) failures*** | | |
| | | |
| ***Far-end (FTU-R) failures*** | | |
| | | |

**Table 7-7 – Line performance monitoring objects**

| Category/object | Defined in clause: | DPU-NB interface |
|---|---|---|
| ***Near-end (FTU-O)/Far-end (FTU-R) performance monitoring counters (current/previous 15 min/24 h interval)*** | | |
| Measured time (CURR/PREV_NE/FE_15/24_L_TIME) | 7.7.1 | R (M) |
| Invalid data flag (PREV_NE/FE_15/24_L_INVALID) | 7.7.2 | R (M) |
| Time Stamp (PREV_NE/FE_15/24_L_STAMP) | 7.7.3 | R (M) |
| LOS failure counter (CURR/PREV_NE/FE_15/24_LOS) | 7.7.4 | R (M) |



Copyright International Telecommunication Union/ITU Telcommunication Sector
Provided by IHS Markit under license with ITU-T
No reproduction or networking permitted without license from IHS
Licensee=/, User=,
Not for Resale,
Full document details: ITU-T G.997.2 CORR 3 2017

**Table 7-7 – Line performance monitoring objects**

| Category/object | Defined in clause: | DPU-NB interface |
|---|---|---|
| LOM failure counter (CURR/PREV_NE/FE_15/24_LOM) | 7.7.5 | R (M) |
| LOR failure counter (CURR/PREV_NE/FE_15/24_LOR) | 7.7.6 | R (M) |
| LPR failure counter (CURR/PREV_NE/FE_15/24_LPR) | 7.7.7 | R (M) |
| ES counter (CURR/PREV_NE/FE_15/24_ES) | 7.7.8 | R (M) |
| Severely errored second (SES) counter (CURR/PREV_NE/FE_15/24_SES) | 7.7.9 | R (M) |
| LOSS counter (CURR/PREV_NE/FE_15/24_LOSS) | 7.7.10 | R (M) |
| LOR second (LORS) counter (CURR/PREV_NE/FE_15/24_LORS) | 7.7.11 | R (M) |
| Unavailable second (UAS) counter (CURR/PREV_NE/FE_15/24_UAS) | 7.7.12 | R (M) |
| ***Initialization performance monitoring counters (current/previous 15 min/24 h interval)*** | | |
| Full inits counter (CURR/PREV_15/24_FULL_INITS) | 7.7.13 | R (M) |
| Failed full inits counter (CURR/PREV_15/24_FAILEDFULL_INITS) | 7.7.14 | R (M) |
| Fast inits counter (CURR/PREV_15/24_FAST_INITS) | 7.7.15 | R (M) |
| Failed Fast inits counter (CURR/PREV_15/24_FAILEDFAST_INITS) | 7.7.16 | R (M) |
| ***Short interruption performance monitoring counters (current/previous 15 min/24 h interval)*** | | |
| LPR_INTRPT counter (CURR/PREV_15/24_LPR_INTRPT) | 7.7.17 | R (M) |
| HRI_INTRPT counter (CURR/PREV_15/24_HRI_INTRPT) | 7.7.18 | R (M) |
| SPONT_INTRPT counter (CURR/PREV_15/24_SPONT_INTRPT) | 7.7.19 | R (M) |
| ***Near-end (FTU-O)/far-end (FTU-R) initiated OLR/FRA performance monitoring counters (current and previous 15 min/24 h interval)*** | | |
| Successful bitswap counter (CURR/PREV_NE/FE_15/24_BSW) | 7.7.20 | R (M) |
| Successful autonomous SRA counter (CURR/PREV_NE/FE_15/24_SRA) | 7.7.21 | R (M) |
| Successful FRA counter (CURR/PREV_NE/FE_15/24_FRA) | 7.7.22 | R (M) |
| Successful RPA counter (CURR/PREV_NE/FE_15/24_RPA) | 7.7.23 | R (M) |



Documents
Document Sharing Hub
Copyright International Telecommunication Union/ITU Telcommunication Sector
Provided by IHS Markit under license with ITU-T
No reproduction or networking permitted without license from IHS
Licensee=/, User=,
Not for Resale,
Full document details: ITU-T G.997.2 CORR 3 2017

**Table 7-7 – Line performance monitoring objects**

| Category/object | Defined in clause: | DPU-NB interface |
|---|---|---|
| ***Near-end (FTU-O) initiated TIGA performance monitoring counters (current and previous 15 min/24 h interval)*** | | |
| Successful TIGA counter (CURR/PREV_15/24_TIGA) | 7.7.24 | R (M) |
| Link State Usage (current and previous 15min/24h interval) | | |
| L2.1N usage counter (CURR/PREV_15/24_L2.1N) | 7.7.25 | R (M) |
| L2.1B usage counter (CURR/PREV_15/24_L2.1B) | 7.7.26 | R (M) |
| L2.2 usage counter (CURR/PREV_15/24_L2.2) | 7.7.27 | R (M) |

**Table 7-8 – Channel performance monitoring objects**

| Category/object | Defined in clause: | DPU-NB interface |
|---|---|---|
| ***Near-end (FTU-O)/far-end (FTU-R) performance monitoring counters (current/previous 15 min/24 h interval)*** | | |
| Measured Time (CURR/PREV_NE/FE_15/24_C_TIME) | 7.8.1 | R (M) |
| Invalid Data Flag (PREV_NE/FE_15/24_C_INVALID) | 7.8.2 | R (M) |
| Time Stamp (PREV_NE/FE_15/24_C_STAMP) | 7.8.3 | R (M) |
| CV counter (CURR/PREV_NE/FE_15/24_CV) | 7.8.4 | R (M) |
| RTXUC counter (CURR/PREV_NE/FE_15/24_RTXUC) | 7.8.5 | R (M) |
| RTXTX counter (CURR/PREV_NE/FE_15/24_RTXTX) | 7.8.6 | R (M) |
| NOTE – The Measured Time, Invalid Data Flag and Time Stamp objects may have the same values as the respective line performance monitoring objects. | | |

**Table 7-9 – Data path performance monitoring objects**

| Category/object | Defined in clause: | DPU-NB interface |
|---|---|---|
| | | |



Copyright International Telecommunication Union/ITU Telcommunication Sector
Provided by IHS Markit under license with ITU-T
No reproduction or networking permitted without license from IHS
Licensee=/, User=,
Not for Resale,
Full document details: ITU-T G.997.2 CORR 3 2017

## Table 7-10 – Line test, diagnostic and status objects

| Category/Object | Defined in clause: | Test parameter group | DPU–NB Interface |
|---|---|---|---|
| ***Profile*** | | | |
| G.9701 profile (PROFILE) | 7.10.1.1 | Not applicable | R (M) |
| ***Initialization*** | | | |
| Initialization success/failure cause (INITSFCAUSE) | 7.10.2.1 | Not applicable | R (M) |
| Initialization last transmitted downstream signal (INITLASTSSIGNALds) | 7.10.2.2 | Not applicable | R (M) |
| Initialization last received upstream signal (INITLASTSIGNALus) | 7.10.2.3 | Not applicable | R (M) |
| ***Signal–to–noise ratio margin*** | | | |
| SNRMds | 7.10.3.1 | Not applicable | R (M) |
| SNRMus | 7.10.3.2 | Not applicable | R (M) |
| ***Upstream power back–off*** | | | |
| UPBOKLE | 7.10.4.1 | Not applicable | R (M) |
| UPBOKLE–R | 7.10.4.2 | Not applicable | R (M) |
| ***Actual aggregate transmit power*** | | | |
| ACTATPds | 7.10.5.1 | FE-G1 | R (M) |
| ACTATPus | 7.10.5.2 | NE-G1 | R (M) |
| ***Actual transmit power spectrum density per sub–carrier*** | | | |
| ACTPSDpsds | 7.10.6.1 | FE-G1 | R (M) |
| ACTPSDpsus | 7.10.6.2 | NE-G1 | R (M) |
| ***Channel characteristics per sub–carrier*** | | | |
| HLOGMTds | 7.10.1.1 | NE-G2 | R(M) |
| HLOGGds | 7.10.7.2 | NE-G2 | R(M) |
| HLOGpsds | 7.10.7.3 | NE-G2 | R(M) |
| HLOGMTus | 7.10.1.4 | NE-G2 | R (M) |
| HLOGGus | 7.10.7.5 | NE-G2 | R (M) |
| HLOGpsus | 7.10.7.6 | NE-G2 | R (M) |
| ***Signal–to–noise ratio per sub–carrier*** | | | |
| SNRMTds | 7.10.8.1 | FE-G1 | R (M) |
| SNRGds | 7.10.8.2 | FE-G1 | R (M) |
| SNRpsds | 7.10.8.3 | FE-G1 | R (M) |
| SNRMTus | 7.10.8.4 | NE-G1 | R (M) |
| SNRGus | 7.10.8.5 | NE-G1 | R (M) |
| SNRpsus | 7.10.8.6 | NE-G1 | R (M) |
| ***Quiet line noise per sub-carrier*** | | | |
| QLNMTds | 7.10.9.1 | FE-G2 | R (M) |
| QLNGds | 7.10.9.2 | FE-G2 | R (M) |
| QLNpsds | 7.10.9.3 | FE-G2 | R (M) |
| QLNMTus | 7.10.9.4 | NE-G2 | R (M) |
| QLNGus | 7.10.9.5 | NE-G2 | R (M) |
| QLNpsus | 7.10.9.6 | NE-G2 | R (M) |



Copyright International Telecommunication Union/ITU Telcommunication Sector
Provided by IHS Markit under license with ITU-T
No reproduction or networking permitted without license from IHS
Full document details: ITU-T G.997.2 CORR 3 2017
Licensee=/, User=,
Not for Resale,
Documents
Document Sharing Hub

## Table 7-10 – Line test, diagnostic and status objects

| Category/Object | Defined in clause: | Test parameter group | DPU–NB Interface |
|---|---|---|---|
| ***Active line noise per sub-carrier*** | | | |
| ALNMT | 7.10.10.1 | FE-G2 | R (M) |
| ALNG | 7.10.10.2 | FE-G2 | R (M) |
| ALNps | 7.10.10.3 | FE-G2 | R (M) |
| ***Low power modes*** | | | |
| L2.1-SNRMds | 7.10.16.1 | Not applicable | R(M) |
| L2.1-SNRMus | 7.10.16.2 | Not applicable | R(M) |
| L2.2-SNRMds | 7.10.16.3 | Not applicable | R(M) |
| L2.2-SNRMus | 7.10.16.4 | Not applicable | R(M) |
| L2-SNRM-RMCds | 7.10.16.5 | Not applicable | R(M) |
| L2-SNRM-RMCus | 7.10.16.6 | Not applicable | R(M) |
| ***Bit allocation per sub–carrier on data symbols*** | | | |
| BITSpsds | 7.10.11.1 | Not applicable | R (M) |
| BITSpsus | 7.10.11.2 | Not applicable | R (M) |
| ***RMC*** | | | |
| SNRM-RMCds | 7.10.12.1 | Not applicable | R (M) |
| SNRM-RMCus | 7.10.12.2 | Not applicable | R (M) |
| BITS-RMCpsds | 7.10.12.3 | Not applicable | R (M) |
| BITS-RMCpsus | 7.10.12.4 | Not applicable | R (M) |
| ***Test parameter time stamps*** | | | |
| STAMP–TEST–NE-G1 | 7.10.13.1 | Not applicable | R (M) |
| STAMP–TEST–FE-G1 | 7.10.13.2 | Not applicable | R (M) |
| STAMP-TEST-NE-G2 | 7.10.13.3 | Not applicable | R (M) |
| STAMP-TEST-FE-G2 | 7.10.13.4 | Not applicable | R (M) |
| ***OLR time stamps*** | | | |
| STAMP–BSWds | 7.10.14.1 | Not applicable | R (M) |
| STAMP–BSWus | 7.10.14.2 | Not applicable | R (M) |
| STAMP–SRAds | 7.10.14.3 | Not applicable | R (M) |
| STAMP–SRAus | 7.10.14.4 | Not applicable | R (M) |
| STAMP–FRAds | 7.10.14.5 | Not applicable | R (M) |
| STAMP–FRAus | 7.10.14.6 | Not applicable | R (M) |
| STAMP–RPAds | 7.10.14.7 | Not applicable | R (M) |
| STAMP–RPAus | 7.10.14.8 | Not applicable | R (M) |
| STAMP–TIGA | 7.10.14.9 | Not applicable | R (M) |
| ***Signal attenuation*** | | | |
| SATNds | 7.10.15.1 | FE-G1 | R (M) |
| SATNus | 7.10.15.2 | NE-G1 | R (M) |
| ***Vectoring*** | | | |
| XLOGDISTds | 7.10.17.1 | NE-G2 | R (O) |
| XLOGBANDSds | 7.10.17.2 | NE-G2 | R (O) |
| XLOGpsds | 7.10.17.3 | NE-G2 | R (O) |



Documents
Document Sharing Hub
Copyright International Telecommunication Union/ITU Telcommunication Sector
Provided by IHS Markit under license with ITU-T
No reproduction or networking permitted without license from IHS
Licensee=/, User=,
Not for Resale,
Full document details: ITU-T G.997.2 CORR 3 2017

**Table 7-11 – Channel test, diagnostic and status objects**

| Category/Object | Defined in clause: | Test parameter group | DPU–NB Interface |
|---|---|---|---|
| ***Actual data rates(downstream/upstream)*** | | | |
| Net Data Rate (NDRds/us) | 7.11.1.1 | Not applicable | R (M) |
| Expected Throughput (ETRds/us) | 7.11.1.2 | Not applicable | R (M) |
| Gamma Data Rate (GDRds/us) | 7.11.1.3 | Not applicable | R (M) |
| ***Attainable data rates (downstream/upstream)*** | | | |
| Attainable net Data rate (ATTNDRds/us) | 7.11.2.1 | Not applicable | R (M) |
| Attainable Expected Throughput (ATTETRds/us) | 7.11.2.2 | Not applicable | R (M) |
| Attainable Gamma Data Rate (ATTGDRds/us) | 7.11.2.3 | Not applicable | R (M) |
| ***Actual impulse noise protection (downstream/upstream)*** | | | |
| ACTINPds/us | 7.11.3.1 | Not applicable | R (M) |
| ACTINP_REINds/us | 7.11.3.2 | Not applicable | R (M) |
| ***Actual framer setting (downstream/upstream)*** | | | |
| DTU–NFECds/us | 7.11.4.1 | Not applicable | R (M) |
| DTU–RFECds/us | 7.11.4.2 | Not applicable | R (M) |
| DTU–Qds/us | 7.11.4.3 | Not applicable | R (M) |
| ***Test parameters per time interval (downstream/upstream)*** | | | |
| Error–free bits current 15 minutes (EFB–C15Mds/us) | 7.11.5.1 | Not applicable | R (M) |
| Error–free bits previous 15 minutes (EFB–P15Mds/us) | 7.11.5.2 | Not applicable | R (M) |
| Error–free bits current 24 hours (EFB–C24Hds/us) | 7.11.5.3 | Not applicable | R (M) |
| Error–free bits previous 24 hours (EFB–P24Hds/us) | 7.11.5.4 | Not applicable | R (M) |
| MINEFTR current15 minutes (MINEFTR_C15Mds/us) | 7.11.5.5 | Not applicable | R (M) |
| MINEFTR previous15 minutes (MINEFTR_P15Mds/us) | 7.11.5.6 | Not applicable | R (M) |
| MINEFTR current 24 hours(MINEFTR_C24Hds/us) | 7.11.5.7 | Not applicable | R (M) |
| MINEFTR previous 24 hours (MINEFTR_P24Hds/us) | 7.11.5.8 | Not applicable | R (M) |
| ***Low power modes (downstream/upstream)*** | | | |
| L2.1-NDRds/us | 7.11.6.1 | Not applicable | R(M) |
| L2.2-NDRds/us | 7.11.6.2 | Not applicable | R(M) |
| L2.1-ETRds/us | 7.11.6.3 | Not applicable | R(M) |
| L.2.2-ETRds/us | 7.11.6.4 | Not applicable | R(M) |



Documents
Document Sharing Hub
Copyright International Telecommunication Union/ITU Telcommunication Sector
Provided by IHS Markit under license with ITU-T
No reproduction or networking permitted without license from IHS
Licensee=/, User=,
Not for Resale,
Full document details: ITU-T G.997.2 CORR 3 2017

**Table 7-12 – Data path test, diagnostic and status objects**

| Category/object | Defined in clause: | DPU-NB interface |
|---|---|---|
| | | |

**Table 7-13 – Inventory objects**

| Category/object | Defined in clause: | DPU-NB interface |
|---|---|---|
| ***FTU related inventory*** | | |
| FTU-O ITU-T G.994.1 vendor ID (FTUO_GHS_VENDOR) | 7.13.1.1 | R (M) |
| FTU-R ITU-T G.994.1 vendor ID (FTUR_GHS_VENDOR) | 7.13.1.2 | R (M) |
| FTU-O version number (FTUO_VERSION) | 7.13.1.3 | R (M) |
| FTU-R version number (FTU-R VERSION) | 7.13.1.4 | R (M) |
| FTU-O self-test result (FTUO-SELFTEST) | 7.13.1.5 | R (M) |
| FTU-R self-test result (FTUR_SELFTEST) | 7.13.1.6 | R (M) |
| ITU-T G.9701 profile support (FTUO_PROFILES) | 7.13.1.7 | R (M) |
| ITU-T G.9701 profile support (FTUR_PROFILES) | 7.13.1.8 | R (M) |
| ***System related inventory*** | | |
| DPU system vendor ID (DPU_SYSTEM_VENDOR) | 7.13.2.1 | R (M) |
| NT system vendor ID (NT_SYSTEM_VENDOR) | 7.13.2.2 | R (M) |
| DPU serial number (DPU_SYSTEM_SERIALNR) | 7.13.2.3 | R (M) |
| NT serial number (NT_SYSTEM_SERIALNR) | 7.13.2.4 | R (M) |
| VCE identifier (VCE_ID) | 7.13.2.5 | R (M) |
| VCE port index (VCE_PORT_INDEX) | 7.13.2.6 | R (M) |

**Table 7-14 – Link state objects**

| Category/Object | Defined in clause: | DPU-NB |
|---|---|---|
| Link State Test Configuration | | |
| Link State Force (LS-FORCED) | 7.14.1.1 | R/W (M) |
| Link State Enabling (LS-ENABLE) | 7.14.1.2 | R/W (M) |
| ***Link state reporting*** | | |
| Link State (LINK-STATE) | 7.14.2.1 | R (M) |
| Link State at update of near-end test parameter group 1 (LINK-STATE-TEST-NE-G1) | 7.14.2.2 | R (M) |
| Link State at update of far-end test parameter group 1 (LINK-STATE-TEST-FE-G1) | 7.14.2.3 | R (M) |



Copyright International Telecommunication Union/ITU Telcommunication Sector
Provided by IHS Markit under license with ITU-T
No reproduction or networking permitted without license from IHS
Licensee=/, User=,
Not for Resale,
Full document details: ITU-T G.997.2 CORR 3 2017
Documents
Document Sharing Hub

## 7.1 Line configuration objects

### 7.1.0 Profiles

#### 7.1.0.1 ITU-T G.9701 profiles enabling (PROFILES)

**Description**: Defines for each profile whether operation according to that profile is allowed or disallowed.

**Type**: Array of PROFILEdescriptor[0...N-1] with N=5.

**PROFILEdescriptor**

**Type**: boolean.

**Valid values**: false (disallowed) and true (allowed).

**Bit representation**

0 [ITU-T G.9701] profile 106a

1 [ITU-T G.9701] profile 106b

2 [ITU-T G.9701] profile 212a

3 [ITU-T G.9701] profile 106c

4 [ITU-T G.9701] profile 212c

**Default value**: All elements of the array set to true (All profiles allowed).

**Reference**: Clause 6 of [ITU-T G.9701].

### 7.1.1 Time division duplexing (TDD)

#### 7.1.1.1 Number of symbol periods in a TDD frame (MF)

**Description**: Defines the total number of symbol periods in a TDD frame.

**Type**: 8-bit unsigned integer.

**Valid values**: 23 and 36.

**Default value**: 36.

**Reference**: Clause 10.5 of [ITU-T G.9701].

#### 7.1.1.2 Number of downstream symbol periods in a TDD frame (Mds)

**Description**: Defines the total number of symbol positions in a TDD frame allocated for downstream transmission. The total number of symbol positions in a TDD frame allocated for upstream transmission is calculated as Mus = MF--1--Mds.

**Type**: 8-bit unsigned integer.

**Valid values**: 10...32 (if MF=36) and 6...19 (if MF=23).

**Default value**: 28.

NOTE – If MF=23, a value different from the default value needs to be configured (see clause 7.1).

**Reference**: Clause 10.5 of [ITU-T G.9701].

#### 7.1.1.3 Cyclic extension (CE)

**Description**: Defines the cyclic extension ($L_{CP}$) to be used.

**Type**: 8-bit unsigned integer.

**Unit**: N/64 samples, with N = index of highest supported downstream data-bearing sub-carrier as defined for the enabled profile (see Table 6-1 of [ITU-T G.9701]) plus one.



Documents
Document Sharing Hub
Copyright International Telecommunication Union/ITU Telcommunication Sector
Provided by IHS Markit under license with ITU-T
No reproduction or networking permitted without license from IHS
Licensee=/, User=,
Not for Resale,
Full document details: ITU-T G.997.2 CORR 3 2017

**Valid values**: 4, 8, 10, 12, 14, 16, 20, 24, 30 and 33.

**Default value**: 10.

**Reference**: Clause 10.4.4 of [ITU-T G.9701].

### 7.1.2 Power and spectrum usage

#### 7.1.2.1 Downstream maximum aggregate transmit power (MAXATPds)

**Description**: Defines the maximum aggregate transmit power at the U-O2 reference point in the downstream direction during initialization and showtime (in dBm).

**Type**: 16-bit signed integer.

**Unit**: 0.1 dBm.

**Valid values**: −310...+310 (−31 to +31 dBm).

**Default value**: 40 (4 dBm).

**Reference**: Clause 7.3.2 of [ITU-T G.9701].

#### 7.1.2.2 Upstream maximum aggregate transmit power (MAXATPus)

**Description**: Defines the maximum aggregate transmit power at the U-R2 reference point in the upstream direction during initialization and showtime (in dBm).

**Type**: 16-bit signed integer.

**Unit**: 0.1 dBm.

**Valid values**: −310...+310 (−31 to +31 dBm).

**Default value**: 40 (4 dBm).

**Reference**: Clause 7.3.2 of [ITU-T G.9701].

#### 7.1.2.3 Downstream sub-carrier masking (CARMASKds)

**Description**: Defines the masked sub-carrier bands in the downstream direction. All sub-carriers within the band, i.e., with indices greater than or equal to the start sub-carrier index and less than or equal to the stop sub-carrier index, are masked, i.e., have a transmit power set to zero (linear scale).

**Type**: Array of CARMASKdescriptor[0...N-1], with N <= 32.

**CARMASKdescriptor:**

**Type**: Record of a start sub-carrier index and a stop sub-carrier index.

**Sub-carrier index:**

**Type**: 16-bit unsigned integer.

**Valid values**: 0...4095 (sub-carrier index 0 to 4095).

**Default value**: Empty array (No masked sub-carriers).

**Reference**: Clause 6.3 of [ITU-T G.9700], and clause 7.3.1.3 of [ITU-T G.9701].

#### 7.1.2.4 Upstream sub-carrier masking (CARMASKus)

**Description**: Defines the masked sub-carrier bands in the upstream direction. All sub-carriers within the band, i.e., with indices greater than or equal to the start sub-carrier index and less than or equal to the stop sub-carrier index, have a transmit power set to zero (linear scale).

**Type**: Array of CARMASKdescriptor[0...N-1], with N <= 32.

**CARMASKdescriptor**: See CARMASKds in clause 7.1.2.3.



Documents
Document Sharing Hub
Copyright International Telecommunication Union/ITU Telcommunication Sector
Provided by IHS Markit under license with ITU-T
No reproduction or networking permitted without license from IHS
Licensee=/, User=,
Not for Resale,
Full document details: ITU-T G.997.2 CORR 3 2017

**Default value**: Empty array (No masked sub-carriers).

**Reference**: Clause 6.3 of [ITU-T G.9700] and clause 7.3.1.3 of [ITU-T G.9701].

#### 7.1.2.5 Downstream PSD mask (MIBPSDMASKds)

**Description**: Defines the downstream power spectral density (PSD) mask applicable at the U-O2 reference point. Requirements for a valid MIBPSDMASKds are defined in clauses 7.3.1.1.2.1 and 7.3.1.1.2.2 of [ITU-T G.9701].

**Type**: Array of MIBPSDMASKdescriptor[0...N-1], with N=0 or 2<=N <= 32.

**PSDMASKdescriptor**:

**Type**: Record of a sub-carrier index and a PSD level.

**Sub-carrier index**:

**Type**: 16-bit unsigned integer.

**Valid values:** 0...4095 (sub-carrier index 0 to 4095).

**PSD level**:

**Type**: 8-bit unsigned integer.

**Unit**: −0.5 dBm/Hz.

**Valid values**: 0...255 (0 to −127.5 dBm/Hz).

**Default value**: Empty array (Limit PSD mask defined in [ITU-T G.9700]).

**Reference**: Clause 7.3.1.1 of [ITU-T G.9701].

#### 7.1.2.6 Upstream PSD mask (MIBPSDMASKus)

**Description**: Defines the upstream PSD mask applicable at the U-R2 reference point. Requirements for a valid MIBPSDMASKus are defined in clauses 7.3.1.1.2.1 and 7.3.1.1.2.2 of [ITU-T G.9701].

**Type**: Array of MIBPSDMASKdescriptor[0...N-1], with N=0 or 2<=N <= 32.

**PSDMASKdescriptor**: See MIBPSDMASKds in clause 7.1.2.5.

**Default value**: Empty array (Limit PSD mask defined in [ITU-T G.9700]).

**Reference**: Clause 7.3.1.1 of [ITU-T G.9701].

#### 7.1.2.7 RFI bands (RFIBANDS)

**Description**: Defines the bands where the PSD shall be reduced as specified in clause 7.3.1.2 of [ITU-T G.9701].

**Type**: Array of RFIBANDdescriptor[0...N-1], with N <= 32.

**RFIBANDdescriptor**:

**Type**: Record of a start sub-carrier index and a stop sub-carrier index.

**Sub-carrier index**:

**Type**: 16-bit unsigned integer.

**Valid values**: 0...4095 (sub-carrier index 0 to 4095).

**Default value**: Empty array (No RFI bands, no PSD reduction).

**Reference**: Clauses 7.3.1.2 and 12.3.2.1.1 of [ITU-T G.9701].

#### 7.1.2.8 International amateur radio bands (IARBANDS)

**Description**: Defines for each international amateur radio (IAR) band whether transmit PSD reduction is enabled or disabled in that band.



Documents
Document Sharing Hub
Copyright International Telecommunication Union/ITU Telcommunication Sector
Provided by IHS Markit under license with ITU-T
No reproduction or networking permitted without license from IHS
Licensee=/, User=,
Not for Resale,
Full document details: ITU-T G.997.2 CORR 3 2017

**Type**: Array of IARBANDdescriptor[0...12].

**IARBANDdescriptor:**

**Type**: boolean.

**Valid values**: false (disabled) and true (enabled).

**Bit representation:**

0 International amateur radio band 1800-2000 kHz

1 International amateur radio band 3500-4000 kHz

2 International amateur radio band 7000-7300 kHz

3 International amateur radio band 10100-10150 kHz

4 International amateur radio band 14000-14350 kHz

5 International amateur radio band 18068-18168 kHz

6 International amateur radio band 21000-21450 kHz

7 International amateur radio band 24890-24990 kHz

8 International amateur radio band 28000-29700 kHz

9 International amateur radio band 50000-54000 kHz

10 International amateur radio band 70000-70500 kHz

11 International amateur radio band 144000-148000 kHz

12 International amateur radio band 5351.5-5366.5 kHz

**Default value**: All elements of the array set to false (All IAR bands disabled, no PSD reduction).

**Reference**: Clauses 7.3.1.2 and 12.3.2.1.1 of [ITU-T G.9701], Tables 11.70.8 and 11.70.8.1 of [ITU-T G.994.1].

#### 7.1.2.9 Upstream power back-off reference PSD (UPBOPSDA)

**Description**: Defines the parameter *a* for the UPBO reference PSD used to compute the upstream power back-off for the upstream frequency band.

**Type**: 16-bit unsigned integer.

**Unit**: 0.01 dBm/Hz.

**Offset**: 40 dBm/Hz.

**Valid values**: 0...4095 (40 to 80.95 dBm/Hz).

**Default value**: 0 (40 dBm/Hz).

**Reference**: Clause 7.3.1.4 of [ITU-T G.9701].

#### 7.1.2.10 Upstream power back-off reference PSD (UPBOPSDB)

**Description**: Defines the parameter *b* for the UPBO reference PSD used to compute the upstream power back-off for the upstream frequency band.

**Type**: 16-bit unsigned integer.

**Unit**: 0.01 dBm/Hz.

**Valid values**: 0...4095 (0 to 40.95 dBm/Hz).

**Default value**: 0 (0 dBm/Hz).

**Reference**: Clause 7.3.1.4 of [ITU-T G.9701].



Documents
Document Sharing Hub
Copyright International Telecommunication Union/ITU Telcommunication Sector
Provided by IHS Markit under license with ITU-T
No reproduction or networking permitted without license from IHS
Licensee=/, User=,
Not for Resale,
Full document details: ITU-T G.997.2 CORR 3 2017

#### 7.1.2.11 Upstream electrical length (UPBOKL)

**Description**: Defines the electrical length $kl_0$ (expressed in dB at 1 MHz).

**Type**: 16-bit unsigned integer.

**Unit**: 0.1 dB.

**Valid values**: 0...1280 (0 to 128 dB).

**Default value**: 0 (0 dB)

**Reference**: Clause 7.3.1.4.2.1 of [ITU-T G.9701].

#### 7.1.2.12 Force electrical length (UPBOKLF)

**Description**: Defines whether or not the FTU-R is forced to use the electrical length $kl_0$ = UPBOKL to compute the UPBOMASK. If not forced, the FTUs determine the electrical length $kl_0$.

**Type**: boolean.

**Valid values**: false (not forced) and true (forced).

**Default value**: false (not forced).

**Reference**: Clause 7.3.1.4.2.1 of [ITU-T G.9701].

#### 7.1.2.13 UPBO reference electrical length per band (UPBOKLREF)

**Description**: Defines the UPBO reference electrical length $kl_{0_REF}$ used to compute the upstream power back-off for the Equalized FEXT UPBO method. If $kl_{0_REF} = 0$ (special value) then the Equal PSD UPBO method is used.

**Type**: 16-bit unsigned integer.

**Unit**: 0.1 dB.

**Valid values**: 0 (special value) and 18...255 (1.8 to 25.5 dB).

**Default value**: 0 (special value).

**Reference**: Clause 7.3.1.4.2.2 of [ITU-T G.9701].

### 7.1.3 Noise margin

#### 7.1.3.1 Downstream target noise margin (TARSNRMds)

**Description**: Defines the downstream target noise margin for the channel initialization policy.

**Type**: 16-bit unsigned integer.

**Unit**: 0.1 dB.

**Valid values**: 0...310 (0 to 31 dB).

**Default value**: 60 (6 dB).

**Reference**: Clause 12.3.7 of [ITU-T G.9701].

#### 7.1.3.2 Upstream target noise margin (TARSNRMus)

**Description**: Defines the upstream target noise margin used in the channel initialization policy.

**Type**: 16-bit unsigned integer.

**Unit**: 0.1 dB.

**Valid values**: 0...310 (0 to 31 dB).

**Default value**: 60 (6 dB).



Documents
Document Sharing Hub
Copyright International Telecommunication Union/ITU Telcommunication Sector
Provided by IHS Markit under license with ITU-T
No reproduction or networking permitted without license from IHS
Licensee=/, User=,
Not for Resale,
Full document details: ITU-T G.997.2 CORR 3 2017

**Reference**: Clause 12.3.7 of [ITU-T G.9701].

#### 7.1.3.3 Upstream maximum noise margin (MAXSNRMus)

**Description**: Defines the upstream maximum noise margin used in the channel initialization policy. The special value indicates there is no maximum bound for the upstream noise margin (i.e., the upstream maximum noise margin is infinite).

**Type**: 16-bit unsigned integer.

**Unit**: 0.1 dB.

**Valid values**: 0...310 (0 to 31 dB) and 511 (special value).

**Default value**: 511 (special value).

**Reference**: Clause 12.3.7 of [ITU-T G.9701].

#### 7.1.3.4 Downstream minimum noise margin (MINSNRMds)

**Description**: Defines the downstream minimum noise margin the FTU-R receiver shall tolerate. If the downstream noise margin (SNRMds) falls below this level, a loss-of-margin (*lom*) defect occurs. Upon persistency of the *lom* defect, the FTU-R triggers a re-initialization (see clause 12.1.4.2 of [ITU-T G.9701]).

**Type**: 16-bit unsigned integer.

**Unit**: 0.1 dB.

**Valid values**: 0...310 (0 to 31 dB).

**Default value**: 0 (0 dB).

**Reference**: Clause 12.3.4.2.1 of [ITU-T G.9701].

#### 7.1.3.5 Upstream minimum noise margin (MINSNRMus)

**Description**: Defines the upstream minimum noise margin the FTU-O receiver shall tolerate. If the upstream noise margin (SNRMus) falls below this level, the FTU-O requests the FTU-R to increase the FTU-R transmit power. If an increase to FTU-R transmit power is not possible, a *lom* defect occurs. Upon persistency of the *lom* defect, the FTU-O triggers a re-initialization (see clause 12.1.4.2 of [ITU-T G.9701]).

**Type**: 16-bit unsigned integer.

**Unit**: 0.1 dB.

**Valid values**: 0...310 (0 to 31 dB).

**Default value**: 0 (0 dB).

**Reference**: Clause 12.3.4.2.1 of [ITU-T G.9701].

### 7.1.4 Seamless rate adaptation

#### 7.1.4.1 Downstream upshift noise margin (SRA-USNRMds)

**Description**: If the downstream noise margin (SNRMds) is above the downstream upshift noise margin and stays above that for more than the time specified by the downstream minimum upshift rate adaptation interval (SRA-UTIMEds), the FTU-R autonomously attempts to increase the downstream net data rate (NDRds).

**Type**: 16-bit unsigned integer.

**Unit**: 0.1 dB.

**Valid values**: 0...310 (0 to 31 dB).



Documents
Document Sharing Hub
Copyright International Telecommunication Union/ITU Telcommunication Sector
Provided by IHS Markit under license with ITU-T
No reproduction or networking permitted without license from IHS
Licensee=/, User=,
Not for Resale,
Full document details: ITU-T G.997.2 CORR 3 2017

**Default value**: 70 (7 dB).

**Reference**: Clause 12.3.4.2.1 of [ITU-T G.9701].

#### 7.1.4.2 Upstream upshift noise margin (SRA-USNRMus)

**Description**: If the upstream noise margin (SNRMus) is above the upstream upshift noise margin and stays above that for more than the time specified by the upstream minimum upshift rate adaptation interval (SRA-UTIMEus), the FTU-O autonomously attempts to increase the upstream net data rate (NDRus).

**Type**: 16-bit unsigned integer.

**Unit**: 0.1 dB.

**Valid values**: 0...310 (0 to 31 dB).

**Default value**: 70 (7 dB).

**Reference**: Clause 12.3.4.2.1 of [ITU-T G.9701].

#### 7.1.4.3 Downstream minimum time interval for upshift SRA (SRA-UTIMEds)

**Description**: Defines the interval of time the downstream noise margin (SNRMds) should stay above the downstream upshift noise margin (SRA-USNRMds) before the FTU-R autonomously attempts to increase the NDRds.

**Type**: 16-bit unsigned integer.

**Unit**: 1 s.

**Valid values**: 0...16383 (0 to $2^{14}$–1 s).

**Default value**: 8 (8 s).

**Reference**: Clause 12.3.4.2.1 of [ITU-T G.9701].

#### 7.1.4.4 Upstream minimum time interval for upshift SRA (SRA-UTIMEus)

**Description**: Defines the interval of time the upstream noise margin (SNRMus) should stay above the upstream upshift noise margin (SRA-USNRMus) before the FTU-O autonomously attempts to increase the NDRus.

**Type**: 16-bit unsigned integer.

**Unit**: 1 s.

**Valid values**: 0...16383 (0 to $2^{14}$–1 s).

**Default value**: 8 (8 s).

**Reference:** Clause 12.3.4.2.1 of [ITU-T G.9701].

#### 7.1.4.5 Downstream downshift noise margin (SRA-DSNRMds)

**Description**: If the downstream noise margin (SNRMds) is below the downstream downshift noise margin and stays below that for more than the time specified by the downstream minimum downshift rate adaptation interval (SRA-DTIMEds), the FTU-R autonomously attempts to decrease the NDRds.

**Type**: 16-bit unsigned integer.

**Unit**: 0.1 dB.

**Valid values**: 0...310 (0 to 31 dB).

**Default value**: 50 (5 dB).

**Reference**: Clause 12.3.4.2.1 of [ITU-T G.9701].



Documents
Document Sharing Hub
Copyright International Telecommunication Union/ITU Telcommunication Sector
Provided by IHS Markit under license with ITU-T
No reproduction or networking permitted without license from IHS
Licensee=/, User=,
Not for Resale,
Full document details: ITU-T G.997.2 CORR 3 2017

#### 7.1.4.6 Upstream downshift noise margin (SRA-DSNRMus)

**Description**: If the upstream noise margin (SNRMus) is below the upstream downshift noise margin and stays below that for more than the time specified by the upstream minimum downshift rate adaptation interval (SRA-DTIMEus), the FTU-O autonomously attempts to decrease the NDRus.

**Type**: 16-bit unsigned integer.

**Unit**: 0.1 dB.

**Valid values**: 0..310 (0 to 31 dB).

**Default value**: 50 (5 dB).

**Reference**: Clause 12.3.4.2.1 of [ITU-T G.9701].

#### 7.1.4.7 Downstream minimum time interval for downshift SRA (SRA-DTIMEds)

**Description**: Defines the interval of time the downstream noise margin (SNRMds) should stay below the downstream downshift noise margin (SRA-DSNRMds) before the FTU-R autonomously attempts to decrease the NDRds.

**Type**: 16-bit unsigned integer.

**Unit**: 1 s.

**Valid values**: 0...16383 (0 to $2^{14}$–1 s).

**Default value**: 2 (2 s).

**Reference**: Clause 12.3.4.2.1 of [ITU-T G.9701].

#### 7.1.4.8 Upstream minimum time interval for downshift SRA (SRA-DTIMEus)

**Description**: Defines the interval of time the upstream noise margin (SNRMus) should stay below the upstream downshift noise margin (SRA-DSNRMus) before the FTU-O autonomously attempts to decrease the NDRus.

**Type**: 16-bit unsigned integer.

**Unit**: 1 s.

**Valid values**: 0...16383 (0 to $2^{14}$-1 s).

**Default value**: 2 (2 s).

**Reference**: Clause 12.3.4.2.1 of [ITU-T G.9701].

### 7.1.5 Fast rate adaptation

#### 7.1.5.1 Downstream FRA time window (FRA-TIMEds)

**Description**: Defines the duration of the time window used in the standard FRA triggering criteria (see clause 13.4.3.2 of [ITU-T G.9701]) for the downstream direction. The special value 0 indicates that vendor discretionary values for *fra-ntones*, *fra-rtx-uc*, and *fra-time* may be used in the downstream direction.

**Type**: 8-bit unsigned integer.

**Unit**: 1 logical frame length.

**Valid values**: 0 (special value) and (1...8 (if MF=36) or 1...12 (if MF=23)).

**Default value**: 8

**Reference**: Clause 13.3.1.1.1.1 of [ITU-T G.9701].



Documents
Document Sharing Hub
Copyright International Telecommunication Union/ITU Telcommunication Sector
Provided by IHS Markit under license with ITU-T
No reproduction or networking permitted without license from IHS
Licensee=/, User=,
Not for Resale,
Full document details: ITU-T G.997.2 CORR 3 2017

#### 7.1.5.2 Upstream FRA time window (FRA-TIMEus)

**Description**: Defines the duration of the time window used in the standard FRA triggering criteria (see clause 13.4.3.2 of [ITU-T G.9701]) for the upstream direction. The special value 0 indicates that vendor discretionary values for *fra-ntones*, *fra-rtx-uc*, and *fra-time* may be used in the upstream direction.

**Type**: 8-bit unsigned integer.

**Unit**: 1 logical frame length.

**Valid values**: 0 (special value) and (1...8 (if MF=36) or 1...12 (if MF=23)).

**Default value**: 8.

**Reference**: Clause 13.3.1.1.1.1 of [ITU-T G.9701].

#### 7.1.5.3 Downstream FRA minimum percentage of degraded tones (FRA-NTONESds)

**Description**: Defines the minimum percentage of loaded sub-carriers that are detected as degraded throughout a time window equal to FRA-TIMEds in order to arm the first FRA triggering criteria (see clause 13.3.1.1.1.5 of [ITU-T G.9701]) in the downstream direction. The special value 0 indicates that monitoring of the percentage of degraded sub-carriers is disabled.

**Type**: 8-bit unsigned integer.

**Valid values**: 0 and 1...100.

**Default value**: 50.

**Reference**: Clause 13.3.1.1.1.2 of [ITU-T G.9701].

#### 7.1.5.4 Upstream FRA minimum percentage of degraded tones (FRA-NTONESus)

**Description**: Defines the minimum percentage of loaded sub-carriers (i.e., sub-carriers with bi>0) that are detected as degraded throughout a time window equal to FRA-TIMEds in order to arm the first FRA triggering criteria (see clause 13.3.1.1.1.5 of [ITU-T G.9701]) in the upstream direction. The special value 0 indicates that monitoring of the percentage of degraded sub-carriers is disabled.

**Type**: 8-bit unsigned integer.

**Valid values**: 0 and 1...100.

**Default value**: 50.

**Reference**: Clause 13.3.1.1.1.2 of [ITU-T G.9701].

#### 7.1.5.5 Downstream FRA number of uncorrectable DTU (FRA-RTXUCds)

**Description**: Defines the minimum number of *rtx-uc* anomalies received throughout a time window equal to FRA-TIMEds in order to arm the second FRA triggering criteria (see clause 13.3.1.1.1.5 of [ITU-T G.9701]) in the downstream direction. The special value 0 indicates that monitoring of the number of *rtx-uc* anomalies is disabled.

**Type**: 16-bit unsigned integer.

**Valid values**: 0 and 1...1023.

**Default value**: 150.

**Reference**: Clause 13.3.1.1.1.3 of [ITU-T G.9701].

#### 7.1.5.6 Upstream FRA number of uncorrectable DTU (FRA-RTXUCus)

**Description**: Defines the minimum number of *rtx-uc* anomalies received throughout a time window equal to FRA-TIMEds in order to arm the second FRA triggering criteria (see clause 13.3.1.1.1.5 of



Documents
Document Sharing Hub
Copyright International Telecommunication Union/ITU Telcommunication Sector
Provided by IHS Markit under license with ITU-T
No reproduction or networking permitted without license from IHS
Licensee=/, User=,
Not for Resale,
Full document details: ITU-T G.997.2 CORR 3 2017