International Telecommunication Union

ITU-T

TELECOMMUNICATION
STANDARDIZATION SECTOR
OF ITU

G.997.2

Corrigendum 4

(03/2018)

SERIES G: TRANSMISSION SYSTEMS AND MEDIA, DIGITAL SYSTEMS AND NETWORKS

Digital sections and digital line system – Metallic access networks

---

Physical layer management for G.fast transceivers

Corrigendum 4

Recommendation ITU-T G.997.2 (2015) – Corrigendum 4

Copyright International Telecommunication Union/ITU Telcommunication Sector
Provided by IHS Markit under license with ITU-T
No reproduction or networking permitted without license from IHS
Licensee=/, User=,
Not for Resale,
Full document details: ITU-T G.997.2 CORR 4 2018

ITU-T G-SERIES RECOMMENDATIONS

TRANSMISSION SYSTEMS AND MEDIA, DIGITAL SYSTEMS AND NETWORKS

INTERNATIONAL TELEPHONE CONNECTIONS AND CIRCUITS	G.100–G.199
GENERAL CHARACTERISTICS COMMON TO ALL ANALOGUE CARRIER-TRANSMISSION SYSTEMS	G.200–G.299
INDIVIDUAL CHARACTERISTICS OF INTERNATIONAL CARRIER TELEPHONE SYSTEMS ON METALLIC LINES	G.300–G.399
GENERAL CHARACTERISTICS OF INTERNATIONAL CARRIER TELEPHONE SYSTEMS ON RADIO-RELAY OR SATELLITE LINKS AND INTERCONNECTION WITH METALLIC LINES	G.400–G.449
COORDINATION OF RADIOTELEPHONY AND LINE TELEPHONY	G.450–G.499
TRANSMISSION MEDIA AND OPTICAL SYSTEMS CHARACTERISTICS	G.600–G.699
DIGITAL TERMINAL EQUIPMENTS	G.700–G.799
DIGITAL NETWORKS	G.800–G.899
DIGITAL SECTIONS AND DIGITAL LINE SYSTEM	G.900–G.999
General	G.900–G.909
Parameters for optical fibre cable systems	G.910–G.919
Digital sections at hierarchical bit rates based on a bit rate of 2048 kbit/s	G.920–G.929
Digital line transmission systems on cable at non-hierarchical bit rates	G.930–G.939
Digital line systems provided by FDM transmission bearers	G.940–G.949
Digital line systems	G.950–G.959
Digital section and digital transmission systems for customer access to ISDN	G.960–G.969
Optical fibre submarine cable systems	G.970–G.979
Optical line systems for local and access networks	G.980–G.989
Metallic access networks	**G.990–G.999**
MULTIMEDIA QUALITY OF SERVICE AND PERFORMANCE – GENERIC AND USER-RELATED ASPECTS	G.1000–G.1999
TRANSMISSION MEDIA CHARACTERISTICS	G.6000–G.6999
DATA OVER TRANSPORT – GENERIC ASPECTS	G.7000–G.7999
PACKET OVER TRANSPORT ASPECTS	G.8000–G.8999
ACCESS NETWORKS	G.9000–G.9999

For further details, please refer to the list of ITU-T Recommendations.

--`,,```,,,,````-`-`,,`,,`,`,,`---

Documents
Document Sharing Hub

Copyright International Telecommunication Union/ITU Telcommunication Sector
Provided by IHS Markit under license with ITU-T
No reproduction or networking permitted without license from IHS
Licensee=/, User=,
Not for Resale,
Full document details: ITU-T G.997.2 CORR 4 2018

Recommendation ITU-T G.997.2

Physical layer management for G.fast transceivers

Corrigendum 4

Summary

Recommendation ITU-T G.997.2 specifies the physical layer management for fast access to subscriber terminals (G.fast) transmission systems. It specifies managed objects for configuration, fault, status, inventory and performance management.

Corrigendum 4 includes:

– Correction to the set of valid values for FRA-TIME

– Correction to references for actual INP objects

– Addition of lacking 15-min threshold to short interruptions

History

Edition	Recommendation	Approval	Study Group	Unique ID*
1.0	ITU-T G.997.2	2015-05-22	15	11.1002/1000/12375
1.1	ITU-T G.997.2 (2015) Cor. 1	2016-03-29	15	11.1002/1000/12800
1.2	ITU-T G.997.2 (2015) Amd. 1	2016-05-07	15	11.1002/1000/12555
1.3	ITU-T G.997.2 (2015) Amd. 2	2016-07-22	15	11.1002/1000/12799
1.4	ITU-T G.997.2 (2015) Cor. 2	2016-12-22	15	11.1002/1000/13067
1.5	ITU-T G.997.2 (2015) Amd. 3	2017-04-06	15	11.1002/1000/13066
1.6	ITU-T G.997.2 (2015) Cor. 3	2017-08-13	15	11.1002/1000/13311
1.7	ITU-T G.997.2 (2015) Amd. 4	2017-12-07	15	11.1002/1000/13310
1.8	ITU-T G.997.2 (2015) Cor. 4	2018-03-16	15	11.1002/1000/13535

Keywords

Distribution point unit, DPU, G.fast transceivers, management, performance monitoring.

* To access the Recommendation, type the URL http://handle.itu.int/ in the address field of your web browser, followed by the Recommendation's unique ID. For example, http://handle.itu.int/11.1002/1000/11830-en.

Documents
Document Sharing Hub

Copyright International Telecommunication Union/ITU Telcommunication Sector
Provided by IHS Markit under license with ITU-T
No reproduction or networking permitted without license from IHS
Licensee=/, User=,
Not for Resale,
Full document details: ITU-T G.997.2 CORR 4 2018

FOREWORD

The International Telecommunication Union (ITU) is the United Nations specialized agency in the field of telecommunications, information and communication technologies (ICTs). The ITU Telecommunication Standardization Sector (ITU-T) is a permanent organ of ITU. ITU-T is responsible for studying technical, operating and tariff questions and issuing Recommendations on them with a view to standardizing telecommunications on a worldwide basis.

The World Telecommunication Standardization Assembly (WTSA), which meets every four years, establishes the topics for study by the ITU-T study groups which, in turn, produce Recommendations on these topics.

The approval of ITU-T Recommendations is covered by the procedure laid down in WTSA Resolution 1.

In some areas of information technology which fall within ITU-T's purview, the necessary standards are prepared on a collaborative basis with ISO and IEC.

NOTE

In this Recommendation, the expression "Administration" is used for conciseness to indicate both a telecommunication administration and a recognized operating agency.

Compliance with this Recommendation is voluntary. However, the Recommendation may contain certain mandatory provisions (to ensure, e.g., interoperability or applicability) and compliance with the Recommendation is achieved when all of these mandatory provisions are met. The words "shall" or some other obligatory language such as "must" and the negative equivalents are used to express requirements. The use of such words does not suggest that compliance with the Recommendation is required of any party.

INTELLECTUAL PROPERTY RIGHTS

ITU draws attention to the possibility that the practice or implementation of this Recommendation may involve the use of a claimed Intellectual Property Right. ITU takes no position concerning the evidence, validity or applicability of claimed Intellectual Property Rights, whether asserted by ITU members or others outside of the Recommendation development process.

As of the date of approval of this Recommendation, ITU had received notice of intellectual property, protected by patents, which may be required to implement this Recommendation. However, implementers are cautioned that this may not represent the latest information and are therefore strongly urged to consult the TSB patent database at http://www.itu.int/ITU-T/ipr/.

© ITU 2018

All rights reserved. No part of this publication may be reproduced, by any means whatsoever, without the prior written permission of ITU.

Documents
Document Sharing Hub
Copyright International Telecommunication Union/ITU Telcommunication Sector
Provided by IHS Markit under license with ITU-T
No reproduction or networking permitted without license from IHS
Licensee=/, User=,
Not for Resale,
Full document details: ITU-T G.997.2 CORR 4 2018

Table of Contents

		Page
1	Scope	1
2	References	1
3	Definitions	1
	3.1 Terms defined elsewhere	1
	3.2 Terms defined in this Recommendation	1
4	Abbreviations and acronyms	2
5	Management architecture	4
6	Network management protocol	5
7	Managed objects	6
	7.1 Line configuration objects	20
	7.2 Channel configuration objects	38
	7.3 Data path configuration objects	42
	7.4 Line failures	42
	7.5 Channel failures	43
	7.6 Data path failures	43
	7.7 Line performance monitoring objects	43
	7.8 Channel performance monitoring objects	49
	7.9 Data path performance monitoring objects	51
	7.10 Line test, diagnostics and status objects	51
	7.11 Channel test, diagnostics and status objects	65
	7.12 Data path test, diagnostics and status objects	70
	7.13 Inventory objects	70
	7.14 Link State related managed objects	73
8	Procedures for performance monitoring functions	74
	8.1 Line transmission states	74
	8.2 Threshold reports	75
	8.3 Unavailable and available state filters	76
	8.4 TR1 filter	76
	8.5 TR2 filter	76
	8.6 Evaluation of TR1	76
	8.7 Evaluation of TR2	76
	8.8 Threshold report evaluation during transmission state changes	77
	8.9 Performance history storage in network elements	77
	8.10 Register size	77
	8.11 Parameter counts	77
	8.12 Date/time-stamping of reports	77
	8.13 Inhibiting performance monitoring parameters	78

Documents
Document Sharing Hub
Copyright International Telecommunication Union/ITU Telcommunication Sector
Provided by IHS Markit under license with ITU-T
No reproduction or networking permitted without license from IHS
Licensee=/, User=,
Not for Resale,
Full document details: ITU-T G.997.2 CORR 4 2018

Page

Annex A – Physical layer management for reverse power feeding (RPF) of remote access equipment 79

A.1 Scope 79

A.2 References 79

A.3 Definitions 79

A.4 Abbreviations and acronyms 80

A.5 DPU and NT management architecture 80

A.6 Network management protocol 81

A.7 DPU Northbound managed objects 85

Annex B to Annex R 96

Annex S – Management for network termination (NT) software upgrade process 97

S.1 Scope 97

S.2 References 97

S.3 Definitions 97

S.4 Abbreviations and acronyms 97

S.5 DPU management architecture 97

S.6 Network management protocol 97

S.7 Managed objects 97

Annex T – Annex X and Annex T of ITU-T G.9701 – Managed objects 102

T.1 Overview of Annex X and Annex T of ITU-T G.9701 managed objects 102

T.2 Annex X and Annex T of [ITU-T G.9701] control objects 103

T.3 Annex X and Annex T of ITU-T G.9701 status objects 104

T.4 Annex X and Annex T of ITU-T G.9701 inventory objects 105

Annex U to Annex W 106

Annex X – Cross-layer link state objects 107

X.1 Overview of cross-layer link state objects 107

X.2 Cross-Layer Low power Mode Control 107

Appendix I Broadband Forum considerations on the FTTdp deployment scenario 112

Bibliography 113

Documents
Document Sharing Hub

Copyright International Telecommunication Union/ITU Telcommunication Sector
Provided by IHS Markit under license with ITU-T
No reproduction or networking permitted without license from IHS
Licensee=/, User=,
Not for Resale,
Full document details: ITU-T G.997.2 CORR 4 2018

Recommendation ITU-T G.997.2

Physical layer management for G.fast transceivers

Corrigendum 4

Editorial note: This is a complete-text publication. The modifications introduced by this corrigedum are shown in revision marks relative to Recommendation ITU-T G.997.2 (2015) plus its Cor.1 (2016), Cor.2 (2016), Cor. 3 (2017), Amd.1 (2016), Amd.2 (2016), Amd 3 (2017) and Amd 4 (2017).

1 Scope

This Recommendation specifies the physical layer management for fast access to subscriber terminals (G.fast) transmission systems.

It specifies managed objects for configuration, fault, status, inventory and performance management. The list of managed objects applies at the distribution point unit-Northbound (DPU-NB) interface, relating to the "DPU-MIB" nomenclature used in [ITU-T G.9701]. The managed objects are defined to provide, at least, all the information necessary for translation into a YANG data model [b-IETF RFC 6020], although this does not exclude translation to other formats such as an abstract syntax notation one (ASN.1) (ITU-T X.680 series) management information base (MIB) description used in connection with the simple network management protocol (SNMP) [b-IETF RFC 1157]. The definition of the YANG data model for G.fast-managed objects is outside the scope of this Recommendation.

2 References

The following ITU-T Recommendations and other references contain provisions which, through reference in this text, constitute provisions of this Recommendation. At the time of publication, the editions indicated were valid. All Recommendations and other references are subject to revision; users of this Recommendation are therefore encouraged to investigate the possibility of applying the most recent edition of the Recommendations and other references listed below. A list of the currently valid ITU-T Recommendations is regularly published. The reference to a document within this Recommendation does not give it, as a stand-alone document, the status of a Recommendation.

[ITU-T G.994.1] Recommendation ITU-T G.994.1 (2012), *Handshake procedures for digital subscriber line transceivers*.

[ITU-T G.9700] Recommendation ITU-T G.9700 (2014), *Fast access to subscriber terminals (G.fast) – Power spectral density specification*.

[ITU-T G.9701] Recommendation ITU-T G.9701 (2014), *Fast access to subscriber terminals (G.fast) – Physical layer specification*.

3 Definitions

3.1 Terms defined elsewhere

This Recommendation uses the following terms defined elsewhere:

3.1.1 managed resource [b-ITU-T M.3010]: The abstraction of those aspects of a telecommunication resource (logical or physical) required for telecommunications management.

3.2 Terms defined in this Recommendation

This Recommendation defines the following terms:

Documents
Document Sharing Hub
Copyright International Telecommunication Union/ITU Telcommunication Sector
Provided by IHS Markit under license with ITU-T
No reproduction or networking permitted without license from IHS
Licensee=/, User=,
Not for Resale,
Full document details: ITU-T G.997.2 CORR 4 2018

3.2.1 AdminStatus: (Based on clause 12.1.1.7 of [ITU-T G.9701]) The AdminStatus represents the configured, desired state of the interface. The AdminStatus "up" is equivalent with the interface "enabled=true", where the desired link state is L0, L2.1N, L2.1B, or L2.2. The AdminStatus "down" is equivalent with the interface "enabled=false", where the desired link state is L3.

NOTE – The relation between the AdminStatus ("up" or "down") and the interface (enabled="true" or "false") is defined in the IETF YANG Data Model for Interface Management [b-IETF RFC 7223].

3.2.2 anomaly: A discrepancy between the actual and desired characteristics of an item.

The desired characteristic may be expressed in the form of a specification.

An anomaly may or may not affect the ability of an item to perform a required function.

3.2.3 defect: A limited interruption in the ability of an item to perform a required function. It may or may not lead to maintenance action depending on the results of additional analysis.

Successive anomalies causing a decrease in the ability of an item to perform a required function are considered a defect.

3.2.4 empty array: An array whose number of elements is zero.

3.2.5 failure: A termination of the ability of an item to perform a required function.

NOTE – After failure, the item has a fault. Analysis of successive anomalies or defects affecting the same item can lead to the item being considered as "failed".

3.2.6 managed object: The management view of a managed resource.

3.2.7 DPU-NB interface: The interface between the persistent management agent and the management entity of the distribution point unit.

4 Abbreviations and acronyms

This Recommendation uses the following abbreviations and acronyms:

ASN.1	Abstract Syntax Notation one
CV	Code Violation
CV-C	Code Violation – Channel
DPU	Distribution Point Unit
DPU-NB	DPU Northbound
DRA	Dynamic Resource Allocation
ES	Errored Second
FAST	Fast Access to Subscriber Terminals
FE	Far-End
FRA	Fast Rate Adaptation
FTTdp	Fibre To The distribution point
FTTx	Fibre To The x
FTU	FAST Transceiver Unit
FTU-O	FAST Transceiver Unit – Central office end (i.e., network operator end of the loop)
FTU-R	FAST Transceiver Unit – Remote side (i.e., subscriber end of the loop)
GDR	Gamma Data Rate
G.fast	fast access to subscriber terminals

Documents
Document Sharing Hub
Copyright International Telecommunication Union/ITU Telcommunication Sector
Provided by IHS Markit under license with ITU-T
No reproduction or networking permitted without license from IHS
Licensee=/, User=,
Not for Resale,
Full document details: ITU-T G.997.2 CORR 4 2018

LOM	Loss of Margin
LOM-FE	Far-End Loss of Margin
LOR	Loss of RMC
LOR-FE	Far-End Loss of RMC
LORS	LOR Second
LOS	Loss of Signal
LOS-FE	Far-End Loss of Signal
LOSS	LOS Second
LPR	Loss of Power
LPR-FE	Far-End Loss of Power
MIB	Management Information Base
MDU	Multi-Dwelling Unit
ME	Management Entity
NDR	Net Data Rate
NDRds	downstream Net Data Rate
NDRus	upstream Net Data Rate
NE	Network Element
NMS	Network Management System
NT	Network Termination
OLR	On-Line Reconfiguration
OSS	Operations Support Systems
PM	Performance Monitoring
PMA	Persistent Management Agent
PMD	Physical Media Dependent
PMS-TC	Physical Media Specific – Transmission Convergence
PSD	Power Spectral Density
REIN	Repetitive Electrical Impulse Noise
RMC	Robust Management Channel
RPA	RMC Parameter Adjustment
SES	Severely Errored Second
SNMP	Simple Network Management Protocol
SNR	Signal-to-Noise Ratio
SRA	Seamless Rate Adaptation
TDD	Time Division Multiplexing
TPS-TC	Transport Protocol Specific – Transmission Convergence
TR	Threshold Report
UAS	UnAvailable Second

Documents
Document Sharing Hub
Copyright International Telecommunication Union/ITU Telcommunication Sector
Provided by IHS Markit under license with ITU-T
No reproduction or networking permitted without license from IHS
Full document details: ITU-T G.997.2 CORR 4 2018
Licensee=/, User=,
Not for Resale,

U-O Loop interface – Central office end

U-R Loop interface – Remote side (i.e., subscriber end of the loop)

5 Management architecture

The management of an access node (AN) or a distribution point unit (DPU) is performed by the network management system (NMS), passing management information over the Q reference point to each AN's management entity (ME) (see Figure 5-1a) or through a persistent management gent (PMA) to the each DPU's ME (see Figure 5-1b). The NMS may also monitor each G.fast transceiver unit – remote side (FTU-R) via the related network termination's (NT's) ME and G reference point. The connection between the ME functions at the AN or DPU and at the NT is established over management channels provided by the G.fast transceiver unit – central office ends (FTU-Os) and FTU-Rs via the copper pairs.

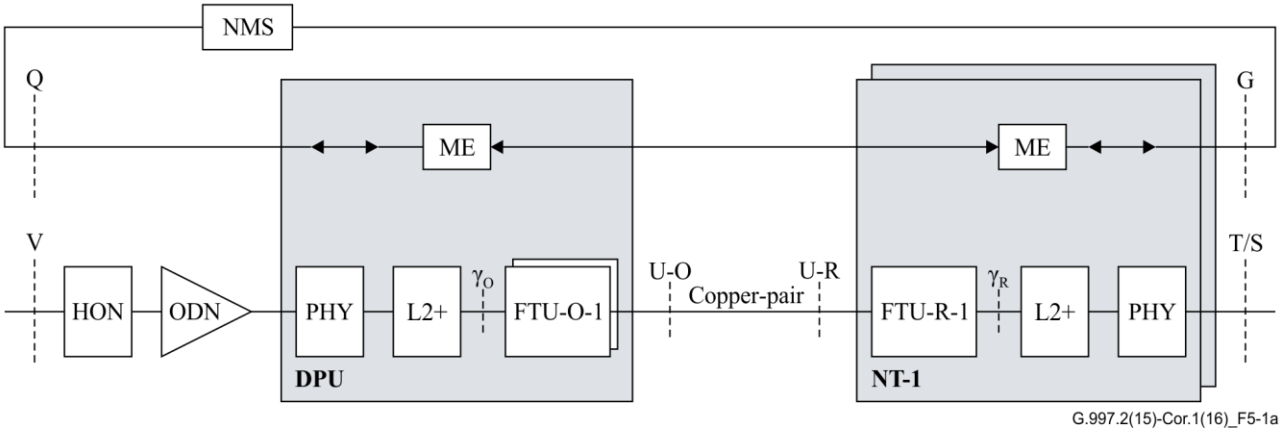

Figure 5-1a – Reference model of traditional AN deployment (shown for line 1 in all N lines (N≥1) connected to an AN)

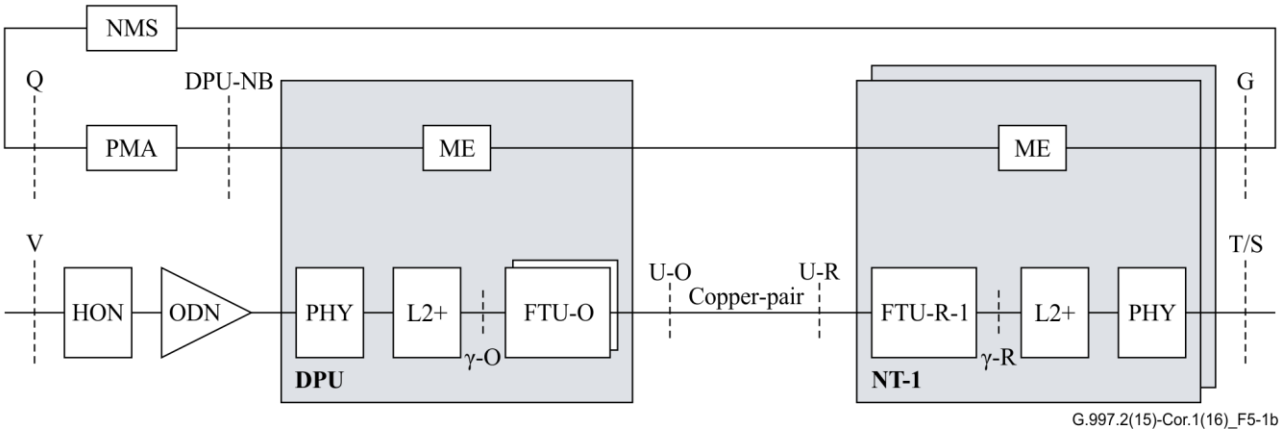

Figure 5-1b – Reference model of FTTdp deployment with PMA and DPU (shown for line 1 in all N lines (N>=1) connected to a DPU)

Appendix I contains additional information regarding the Broadband Forum considerations on the fibre to the distribution point (FTTdp) deployment scenario (see also [b-BBF TR-301]).

The fundamental purpose of the PMA (see Appendix I) is to allow the operations support systems (OSS)/NMS to perform all operations on a given DPU whether or not that DPU is actually powered. This includes the following PMA functionality:

Documents
Document Sharing Hub
Copyright International Telecommunication Union/ITU Telcommunication Sector
Provided by IHS Markit under license with ITU-T
No reproduction or networking permitted without license from IHS
Licensee=/, User=,
Not for Resale,
Full document details: ITU-T G.997.2 CORR 4 2018

- firmware download and management;
- initial provisioning;
- configuration, including rate control;
- test and diagnostics;
- statistics gathering;
- event reporting;
- performance monitoring (PM) history beyond current and previous interval counters;
- management protocol translation between Q interface and the DPU-Northbound interface (DPU-NB interface).

Some of these operations have limited capabilities when the DPU is without power. For example, statistics gathering is limited to the history present in the PMA, since the current information is not available from the DPU.

The OSS/NMS also still needs to be able to ascertain the true power state of the DPU as a whole, and of each given line, for example for diagnostics purposes. It can choose to take into account the power state of a DPU for various processes, e.g., a new firmware download, but does not have to.

While distribution points are at locations where local power is typically not available, DPUs may also be deployed at locations where local powering or forward powering is available (e.g., in multi-dwelling unit (MDU) basements or in fibre to the x (FTTx) cabinets). In this case, a PMA could still exist as a separate entity to the DPU (if the DPU could still be unpowered at times).

[ITU-T G.9701] defines the interfaces between the FTU-O (which is part of the AN or DPU) and the FTU-R (which is part of the NT). This Recommendation specifies the physical layer management for fast access to subscriber terminals (G.fast) transmission systems as seen by the NMS (if the FTU-O is in an AN, see Figure 5-1a) and as seen by the PMA (if the FTU-O is in a DPU, see Figure 5-1b).

Clause 7 and 8 specifies managed objects for configuration, fault, test, diagnostics, status, and inventory management, and for performance monitoring. The list of managed objects applies at the DPU-NB interface shown in Figure 5-1b, relating to the "DPU-MIB" naming as used in [ITU-T G.9701]. The managed objects are defined to provide at least all the information necessary for translation into a YANG data model [b-IETF RFC 6020], although this does not exclude translation to other formats such as an ASN.1 (X.680 series) MIB description used in connection with SNMP [b-IETF RFC 1157].

The definitions of the managed objects defined in clause 7 provide the following information:

- description;
- type;
- unit;
- valid values;
- default value (for configuration objects only);
- reference.

The list of managed objects defined in clauses 7 and 8 also applies at the Q reference point shown in Figure 5-1a.

6 Network management protocol

This Recommendation makes no presumption about which management protocol is used between the NMS and the AN (see Figure 5-1a) or between the PMA and the DPU (see Figure 5-1b) for transport of the G.fast-managed objects.

Documents
Document Sharing Hub
Copyright International Telecommunication Union/ITU Telcommunication Sector
Provided by IHS Markit under license with ITU-T
No reproduction or networking permitted without license from IHS
Licensee=/, User=,
Not for Resale,
Full document details: ITU-T G.997.2 CORR 4 2018

7 Managed objects

The list of managed objects contains six types of information:

1) configuration objects;
2) fault monitoring – failures (alarm indications);
3) fault monitoring – threshold crossing (alert messages);
4) performance monitoring objects (counters);
5) test, diagnostic and status objects;
6) inventory objects.

Figure 7-1 shows the in-service performance monitoring process. The primitives are specified in [ITU-T G.9701].

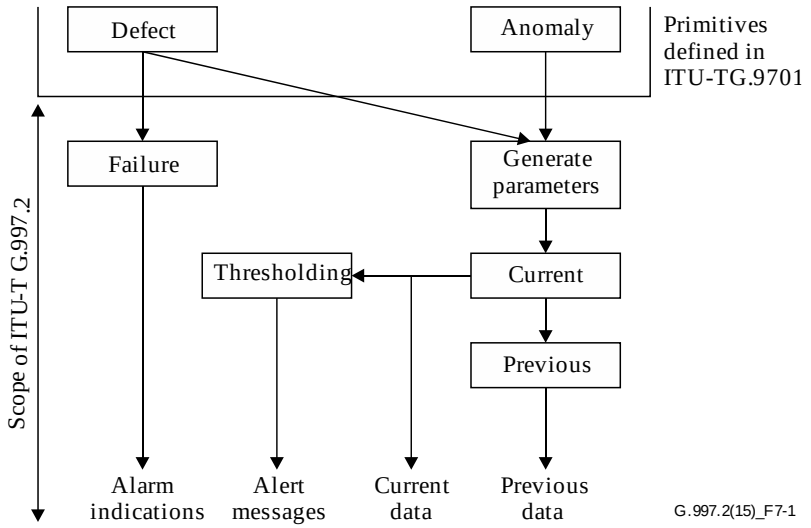

Figure 7-1 – In-service performance monitoring process

As [ITU-T G.9701] supports a DPU with up to 128 lines, provisioning every managed object for every G.fast port on the DPU may become burdensome. Therefore, the DPU configuration management (as defined in the Broadband Forum) defines G.fast configuration profiles, as well as a mechanism to associate these profiles to the individual ports. The definition of G.fast configuration profiles is outside the scope of this Recommendation. The allocation of the individual G.fast-managed objects (as defined in this Recommendation) to G.fast configuration profiles is addressed within the scope of the Broadband Forum.

NOTE – The "configuration profiles" are not the "Profiles" discussed in clause 6 of [ITU-T G.9701]. This clause uses the term "profile" for simplifying the configuration of [ITU-T G.9701] ports on a DPU in the field. Clause 6 of [ITU-T G.9701] is a discussion of a technique for defining the native capabilities (e.g., the particular subset of [ITU-T G.9701]) supported by a particular G.fast transceiver.

At the DPU-NB interface, a line is configured through the following information:

- line configuration objects (see Table 7-1) for the line;
- channel configuration objects (see Table 7-2) for the downstream channel;
- channel configuration objects (see Table 7-2) for the upstream channel;
- data path configuration objects (see Table 7-3) for the downstream data path;
- data path configuration objects (see Table 7-3) for the upstream data path.

Line configuration objects relate to the physical media dependent (PMD) sublayer and the robust management channel (RMC). Channel configuration objects relate to the bearer channel-related

Documents
Document Sharing Hub
Copyright International Telecommunication Union/ITU Telcommunication Sector
Provided by IHS Markit under license with ITU-T
No reproduction or networking permitted without license from IHS
Licensee=/, User=,
Not for Resale,
Full document details: ITU-T G.997.2 CORR 4 2018

aspects of the physical media specific – transmission convergence (PMS-TC) sublayer. Data path configuration objects relate to the transport protocol specific – transmission convergence (TPS-TC) sublayer.

At the DPU-NB interface, a line is monitored through the following information:

- line failures (see Table 7-4);
- channel failures (see Table 7-5);
- data path failures (see Table 7-6);
- line performance monitoring objects (see Table 7-7);
- channel performance monitoring objects (see Table 7-8) for the downstream channel;
- channel performance monitoring objects (see Table 7-8) for the upstream channel;
- data path performance monitoring objects (see Table 7-9) for the downstream data path;
- data path performance monitoring objects (see Table 7-9) for the upstream data path;
- line test, diagnostics and status objects (see Table 7-10);
- channel test, diagnostics and status objects (see Table 7-11) for the downstream channel;
- channel test, diagnostics and status objects (see Table 7-11) for the upstream channel;
- data path test, diagnostic and status objects (see Table 7-12) for the downstream channel;
- data path test, diagnostic and status objects (see Table 7-12) for the upstream channel;
- inventory objects (see Table 7-13).

As [ITU-T G.9701] supports a DPU with up to 128 lines, maintaining the performance monitoring and the test, diagnostic and status information for every line may become burdensome. Although access to all mandatory managed objects shall be supported at all times for all ports on the DPU at the DPU-NB interface towards the PMA (see Figure 5-1), the objects may not be maintained within the management entity of the DPU simultaneously for all lines at all times. Although reasonable performance shall be provided at the DPU-NB interface for access to the managed objects of any line, this Recommendation does not define specific performance requirements at this interface.

When the update request flag for a test parameter group (see clause 7.1.9) is set (its value is changed from 0 to 1), the parameters of the associated test parameter groups shall be updated in the DPU-MIB within the update time period specified in Table 7-0. The update request flag for the associated test parameter group is defined in the DPU–MIB and is independent of any autonomous update process in the system. The update request flag shall be reset (its value changed back to 0) by the DPU after the request parameter update is complete. The reset shall be within a period that is shorter than the reset time period specified in Table 7-0 to allow reception of another update request. The reset time period starts since the last time the update request flag was set (externally or by an autonomous process in the system). This applies only to the elements maintained in the DPU.

Test parameters and status parameters shall be updated in L0, L2.1N, L2.1B and L2.2 link states, unless explicitly stated differently in [ITU-T G.9701]. The GDRds/us and ATTGDRds/us shall be updated only in L0 state.

Documents
Document Sharing Hub
Copyright International Telecommunication Union/ITU Telcommunication Sector
Provided by IHS Markit under license with ITU-T
No reproduction or networking permitted without license from IHS
Licensee=/, User=,
Not for Resale,
Full document details: ITU-T G.997.2 CORR 4 2018

Table 7-0 – Test parameter groups

Test parameter group (Note)	Update time period	Reset time period
NE test parameter group 1 (NE-G1)	10 seconds	3 minutes
FE test parameter group 1 (FE-G1)	15 seconds	3 minutes
NE test parameter group 2 (NE-G2)	3 minutes	10 minutes
FE test parameter group 2 (FE-G2)	3 minutes	10 minutes
NOTE – The test parameters contained in each test parameter group are defined in Table 7-10 and Table 7-11.		

Tables 7-1 to 7-11 indicate the status of each managed object over the DPU-NB interface:

- R: Read only
- W: Write only
- R/W: Read and write
- (M): Mandatory
- (O): Optional

Entries in Tables 7-1 to 7-11 labelled with names containing the separator "/" represent multiple objects whose names are obtained by considering all combinations of the elements isolated with the separator. For example, the entry labelled with the name A/B_C/D_E/F represents eight objects with names A_C_E, A_C_F, A_D_E, A_D_F, B_C_E, B_C_F, B_D_E, B_D_F. Also, the entry labelled with the name Ads/us represents two objects with names Ads and Aus. Near-end (-NE) objects apply to the FTU-O, while far-end (-FE) objects apply to the FTU-R.

For each configuration managed object, a default value is defined. Configuring a managed object with a value different from the default may change the applicable valid values of other managed objects and therefore may require reconfiguration of these objects.

Table 7-1 – Line configuration objects

Category/object	Defined in clause:	DPU-NB interface
Profiles		
[ITU-T G.9701] profiles enabling (PROFILES)	7.1.0.1	R/W (M)
Time division Duplexing (TDD)		
Symbol periods per TDD frame (MF)	7.1.1.1	R/W (M)
Symbol periods per TDD frame dedicated for downstream transmission (Mds)	7.1.1.2	R/W (M)
Cyclic extension (CE)	7.1.1.3	R/W (M)
Power and spectrum usage		
MAXATPds	7.1.2.1	R/W (M)
MAXATPus	7.1.2.2	R/W (M)
CARMASKds	7.1.2.3	R/W (M)
CARMASKus	7.1.2.4	R/W (M)
MIBPSDMASKds	7.1.2.5	R/W (M)
MIBPSDMASKus	7.1.2.6	R/W (M)
RFIBANDS	7.1.2.7	R/W (M)

Documents
Document Sharing Hub
Copyright International Telecommunication Union/ITU Telcommunication Sector
Provided by IHS Markit under license with ITU-T
No reproduction or networking permitted without license from IHS
Licensee=/, User=,
Not for Resale,
Full document details: ITU-T G.997.2 CORR 4 2018

Table 7-1 – Line configuration objects

Category/object	Defined in clause:	DPU-NB interface
IARBANDS	7.1.2.8	R/W (M)
UPBOPSDA	7.1.2.9	R/W (M)
UPBOPSDB	7.1.2.10	R/W (M)
UPBOKL	7.1.2.11	R/W (M)
UPBOKLF	7.1.2.12	R/W (M)
UPBOKLREF	7.1.2.13	R/W (M)
Noise margins		
TARSNRMds	7.1.3.1	R/W (M)
TARSNRMus	7.1.3.2	R/W (M)
MAXSNRMus	7.1.3.3	R/W (M)
MINSNRMds	7.1.3.4	R/W (M)
MINSNRMus	7.1.3.5	R/W (M)
Seamless rate adaptation (SRA)		
SRA-USNRMds	7.1.4.1	R/W (M)
SRA-UTIMEds	7.1.4.2	R/W (M)
SRA-USNRMus	7.1.4.3	R/W (M)
SRA-UTIMEus	7.1.4.4	R/W (M)
SRA-DSNRMds	7.1.4.5	R/W (M)
SRA-DTIMEds	7.1.4.6	R/W (M)
SRA-DSNRMus	7.1.4.7	R/W (M)
SRA-DTIMEus	7.1.4.8	R/W (M)
Fast rate adaptation (FRA)		
FRA-TIMEds	7.1.5.1	R/W (M)
FRA-TIMEus	7.1.5.2	R/W (M)
FRA-NTONESds	7.1.5.3	R/W (M)
FRA-NTONESus	7.1.5.4	R/W (M)
FRA-RTXUCds	7.1.5.5	R/W (M)
FRA-RTXUCus	7.1.5.6	R/W (M)
FRA-VENDISCds	7.1.5.7	R/W (M)
FRA-VENDISCus	7.1.5.8	R/W (M)
Robust management channel (RMC)		
TARSNRM-RMCds	7.1.6.1	R/W (M)
TARSNRM-RMCus	7.1.6.2	R/W (M)
MINSNRM-RMCds	7.1.6.3	R/W (M)
MINSNRM-RMCus	7.1.6.4	R/W (M)
MAXBL-RMCds	7.1.6.5	R/W (M)
MAXBL-RMCus	7.1.6.6	R/W (M)

Documents
Document Sharing Hub
Copyright International Telecommunication Union/ITU Telcommunication Sector
Provided by IHS Markit under license with ITU-T
No reproduction or networking permitted without license from IHS
Licensee=/, User=,
Not for Resale,
Full document details: ITU-T G.997.2 CORR 4 2018

Table 7-1 – Line configuration objects

Category/object	Defined in clause:	DPU-NB interface
Vectoring		
FEXT cancellation enabling/disabling downstream (FEXT_TO_CANCEL_ENABLEds)	7.1.7.1	R/W (M)
FEXT cancellation enabling/disabling upstream (FEXT_TO_CANCEL_ENABLEus)	7.1.7.2	R/W (M)
XLOG requested subcarrier group size (XLOGREQds)	7.1.7.3	R/W (O)
XLOG requested disturber index (XLOGDREQds)	7.1.3.4	R/W (O)
Fast-retrain policy		
LOS-PERSISTENCYds	7.1.8.1	R/W (M)
LOS-PERSISTENCYus	7.1.8.2	R/W (M)
LOM-PERSISTENCYds	7.1.8.3	R/W (M)
LOM-PERSISTENCYus	7.1.8.4	R/W (M)
LOR-PERSISTENCYds	7.1.8.5	R/W (M)
LOR-PERSISTENCYus	7.1.8.6	R/W (M)
REINIT_TIME_THRESHOLDds	7.1.8.7	R/W (M)
REINIT_TIME_THRESHOLDus	7.1.8.8	R/W (M)
LOW_ETR_THRESHOLDds	7.1.8.9	R/W (M)
LOW_ETR_THRESHOLDus	7.1.8.10	R/W (M)
Update test parameters request		
UPDATE-NE-TEST	7.1.9.1	R/W (M)
UPDATE-FE-TEST	7.1.9.2	R/W (M)
Low power modes		
L2-TARSNRMds/us	7.1.10.1	R/W (M)
L2.1-MAXSNRMds/us	7.1.10.2	R/W (M)
L2-MAXPSDR	7.1.10.3	R/W (M)
L2.1-SRA-USNRMds	7.1.10.4	R/W(M)
L2.1-SRA-USNRMus	7.1.10.5	R/W(M)
L2.1-SRA-DSNRMds	7.1.10.6	R/W(M)
L2.1-SRA-DSNRMus	7.1.10.7	R/W(M)
Impulse noise monitoring (INM)		
INMIATOds/us	7.1.11.1	R/W(M)
INMIATSds/us	7.1.11.2	R/W(M)
INMCCds/us	7.1.11.3	R/W(M)
INM_INPEQ_FORMATds/us	7.1.11.4	R/W(M)
BRGNds/us	7.1.11.5	R/W(M)
INPEQ_SF	7.1.11.6	R/W(M)

Copyright International Telecommunication Union/ITU Telcommunication Sector
Provided by IHS Markit under license with ITU-T
No reproduction or networking permitted without license from IHS
Licensee=/, User=,
Not for Resale,
Full document details: ITU-T G.997.2 CORR 4 2018
Documents
Document Sharing Hub

Table 7-1 – Line configuration objects

Category/object	Defined in clause:	DPU-NB interface
IAT_SF	7.1.11.7	R/W(M)
INM_ENABLE	7.1.11.8	R/W(M)
RMC recovery (RMCR)		
RMCR_LOR_TRIGGERds/us	7.1.12.1	R/W(M)

Table 7-2 – Channel configuration objects

Category/object	Defined in clause:	DPU-NB interface
Data rate (downstream/upstream)		
Maximum net data rate (NDR) (MAXNDR ds/us)	7.2.1.1	R/W (M)
Minimum expected throughput (MINETRds/us)	7.2.1.2	R/W (M)
Maximum gamma data rate (GDR) (MAXGDRds/us)	7.2.1.3	R/W (M)
Minimum gamma data rate (MINGDRds/us)	7.2.1.4	R/W (M)
Retransmission (downstream/upstream)		
DELAYMAXds/us	7.2.2.1	R/W (M)
INPMIN_SHINEds/us	7.2.2.2	R/W (M)
SHINERATIOds/us	7.2.2.3	R/W (M)
INPMIN_REINds/us	7.2.2.4	R/W (M)
IAT_REINds/us	7.2.2.5	R/W (M)
RNRATIOds/us	7.2.2.6	R/W (M)
RTX_TESTMODE	7.2.2.7	R/W (M)
Low power modes		
L2.1-MAXNDRds/us	7.2.3.1	R/W (M)
L2.2-MAXNDR	7.2.3.2	R/W (M)
L2.1-MINETRds/us	7.2.3.3	R/W (M)
L2.2-MINETR	7.2.3.4	R/W (M)
L2.1-MINETR-EXITds/us	7.2.3.5	R/W (M)
Rate threshold (downstream/upstream)		
LOW-ANDEFTR-THRESHOLDds/us	7.2.4.1	R/W (M)

Table 7-3 – Data path configuration objects

Category/object	Defined in clause:	DPU-NB interface
TPS_TESTMODE	7.3.1	R/W (M)
DRA_TESTMODE	7.3.2	R/W (M)

Documents
Document Sharing Hub
Copyright International Telecommunication Union/ITU Telcommunication Sector
Provided by IHS Markit under license with ITU-T
No reproduction or networking permitted without license from IHS
Licensee=/, User=,
Not for Resale,
Full document details: ITU-T G.997.2 CORR 4 2018

Table 7-4 – Line failures

Category/object	Defined in clause:	DPU-NB interface
Near-end (FTU-O) failures		
Loss of signal (LOS)	7.4.1.1	R (M)
Loss of margin (LOM)	7.4.1.2	R (M)
Loss of RMC (LOR)	7.4.1.3	R (M)
Loss of power (LPR)	7.4.1.4	R (M)
Far-end (FTU-R) failures		
Far-end loss of signal (LOS-FE) failure	7.4.2.1	R (M)
Far-end loss of margin (LOM-FE) failure	7.4.2.2	R (M)
Far-end loss of RMC (LOR-FE) failure	7.4.2.3	R (M)
Far-end loss of power (LPR-FE) failure	7.4.2.4	R (M)
Initialization failures		
Line init (LINIT) failure	7.4.3.1	R (M)

Table 7-5 – Channel failures

Category/object	Defined in clause:	DPU-NB interface
Near-end (FTU-O) failures		
Far-end (FTU-R) failures		

Table 7-6 – Data path failures

Category/object	Defined in clause:	DPU-NB interface
Near-end (FTU-O) failures		
Far-end (FTU-R) failures		

Copyright International Telecommunication Union/ITU Telcommunication Sector
Provided by IHS Markit under license with ITU-T
No reproduction or networking permitted without license from IHS
Licensee=/, User=,
Not for Resale,
Full document details: ITU-T G.997.2 CORR 4 2018

Table 7-7 – Line performance monitoring objects

Category/object	Defined in clause:	DPU-NB interface
Near-end (FTU-O)/Far-end (FTU-R) performance monitoring counters (current/previous 15 min/24 h interval)		
Measured time (CURR/PREV_NE/FE_15/24_L_TIME)	7.7.1	R (M)
Invalid data flag (PREV_NE/FE_15/24_L_INVALID)	7.7.2	R (M)
Time Stamp (PREV_NE/FE_15/24_L_STAMP)	7.7.3	R (M)
LOS failure counter (CURR/PREV_NE/FE_15/24_LOS)	7.7.4	R (M)
LOM failure counter (CURR/PREV_NE/FE_15/24_LOM)	7.7.5	R (M)
LOR failure counter (CURR/PREV_NE/FE_15/24_LOR)	7.7.6	R (M)
LPR failure counter (CURR/PREV_NE/FE_15/24_LPR)	7.7.7	R (M)
ES counter (CURR/PREV_NE/FE_15/24_ES)	7.7.8	R (M)
Severely errored second (SES) counter (CURR/PREV_NE/FE_15/24_SES)	7.7.9	R (M)
LOSS counter (CURR/PREV_NE/FE_15/24_LOSS)	7.7.10	R (M)
LOR second (LORS) counter (CURR/PREV_NE/FE_15/24_LORS)	7.7.11	R (M)
Unavailable second (UAS) counter (CURR/PREV_NE/FE_15/24_UAS)	7.7.12	R (M)
Initialization performance monitoring counters (current/previous 15 min/24 h interval)		
Full inits counter (CURR/PREV_15/24_FULL_INITS)	7.7.13	R (M)
Failed full inits counter (CURR/PREV_15/24_FAILEDFULL_INITS)	7.7.14	R (M)
Fast inits counter (CURR/PREV_15/24_FAST_INITS)	7.7.15	R (M)
Failed Fast inits counter (CURR/PREV_15/24_FAILEDFAST_INITS)	7.7.16	R (M)
Short interruption performance monitoring counters (current/previous 15 min/24 h interval)		
LPR_INTRPT counter (CURR/PREV_15/24_LPR_INTRPT)	7.7.17	R (M)
HRI_INTRPT counter (CURR/PREV_15/24_HRI_INTRPT)	7.7.18	R (M)
SPONT_INTRPT counter (CURR/PREV_15/24_SPONT_INTRPT)	7.7.19	R (M)

Documents
Document Sharing Hub
Copyright International Telecommunication Union/ITU Telcommunication Sector
Provided by IHS Markit under license with ITU-T
No reproduction or networking permitted without license from IHS
Licensee=/, User=,
Not for Resale,
Full document details: ITU-T G.997.2 CORR 4 2018

Table 7-7 – Line performance monitoring objects

Category/object	Defined in clause:	DPU-NB interface
Near-end (FTU-O)/far-end (FTU-R) initiated OLR/FRA performance monitoring counters (current and previous 15 min/24 h interval)		
Successful bitswap counter (CURR/PREV_NE/FE_15/24_BSW)	7.7.20	R (M)
Successful autonomous SRA counter (CURR/PREV_NE/FE_15/24_SRA)	7.7.21	R (M)
Successful FRA counter (CURR/PREV_NE/FE_15/24_FRA)	7.7.22	R (M)
Successful RPA counter (CURR/PREV_NE/FE_15/24_RPA)	7.7.23	R (M)
Near-end (FTU-O) initiated TIGA performance monitoring counters (current and previous 15 min/24 h interval)		
Successful TIGA counter (CURR/PREV_15/24_TIGA)	7.7.24	R (M)
Link State Usage (current and previous 15min/24h interval)		
L2.1N usage counter (CURR/PREV_15/24_L2.1N)	7.7.25	R (M)
L2.1B usage counter (CURR/PREV_15/24_L2.1B)	7.7.26	R (M)
L2.2 usage counter (CURR/PREV_15/24_L2.2)	7.7.27	R (M)
Near-end (FTU-O)/Far-end (FTU-R) INM performance monitoring counters (current and previous 15 min/24 h interval)		
INM INPEQ histogram (CURR/PREV_NE/FE_15/24_INMINPEQ)	7.7.28.1	R(M)
INM total measurement time (CURR/PREV_NE/FE_15/24_INMAME)	7.7.28.2	R(M)
INM IAT histogram (CURR/PREV_NE/FE_15/24_INMIAT)	7.7.28.3	R(M)
INM blank frame counter (CURR/PREV_NE/FE_15/24_INMBLFC)	7.7.28.4	R(M)

Table 7-8 – Channel performance monitoring objects

Category/object	Defined in clause:	DPU-NB interface
Near-end (FTU-O)/far-end (FTU-R) performance monitoring counters (current/previous 15 min/24 h interval)		
Measured Time (CURR/PREV_NE/FE_15/24_C_TIME)	7.8.1	R (M)
Invalid Data Flag (PREV_NE/FE_15/24_C_INVALID)	7.8.2	R (M)
Time Stamp (PREV_NE/FE_15/24_C_STAMP)	7.8.3	R (M)
CV counter (CURR/PREV_NE/FE_15/24_CV)	7.8.4	R (M)
RTXUC counter (CURR/PREV_NE/FE_15/24_RTXUC)	7.8.5	R (M)

Copyright International Telecommunication Union/ITU Telcommunication Sector
Provided by IHS Markit under license with ITU-T
No reproduction or networking permitted without license from IHS
Licensee=/, User=,
Not for Resale,
Full document details: ITU-T G.997.2 CORR 4 2018

Table 7-8 – Channel performance monitoring objects

Category/object	Defined in clause:	DPU-NB interface
RTXTX counter (CURR/PREV_NE/FE_15/24_RTXTX)	7.8.6	R (M)
LANDEFTRS counter (CURR/PREV_NE/FE_15/24_LANDEFTRS)	7.8.7	R (M)
ANDEFTRDS counter (CURR/PREV_NE/FE_15/24_ANDEFTRDS)	7.8.8	R (M)
Near-end(NE) and Far-end(FE) Rate parameters per time interval (current/previous 15 min/24 h time interval)		
MINANDEFTR per time interval (MINANDEFTR _CURR/PREV_NE/FE_15/24)	7.8.9	R (M)
MAXANDEFTR per time interval (MAXANDEFTR _CURR/PREV_NE/FE_15/24)	7.8.10	R (M)
SUMANDEFTR per time interval (SUMANDEFTR _CURR/PREV_NE/FE_15/24)	7.8.11	R (M)
NOTE – The Measured Time, Invalid Data Flag and Time Stamp objects may have the same values as the respective line performance monitoring objects.		

Table 7-9 – Data path performance monitoring objects

Category/object	Defined in clause:	DPU-NB interface

Table 7-10 – Line test, diagnostic and status objects

Category/Object	Defined in clause:	Test parameter group	DPU–NB Interface
Profile			
G.9701 profile (PROFILE)	7.10.1.1	Not applicable	R (M)
Initialization			
Initialization success/failure cause (INITSFCAUSE)	7.10.2.1	Not applicable	R (M)
Initialization last transmitted downstream signal (INITLASTSSIGNALds)	7.10.2.2	Not applicable	R (M)
Initialization last received upstream signal (INITLASTSIGNALus)	7.10.2.3	Not applicable	R (M)
Signal–to–noise ratio margin			
SNRMds	7.10.3.1	Not applicable	R (M)
SNRMus	7.10.3.2	Not applicable	R (M)
Upstream power back–off			
UPBOKLE	7.10.4.1	Not applicable	R (M)
UPBOKLE–R	7.10.4.2	Not applicable	R (M)
Actual aggregate transmit power			
ACTATPds	7.10.5.1	FE-G1	R (M)
ACTATPus	7.10.5.2	NE-G1	R (M)

Documents
Document Sharing Hub
Copyright International Telecommunication Union/ITU Telcommunication Sector
Provided by IHS Markit under license with ITU-T
No reproduction or networking permitted without license from IHS
Licensee=/, User=,
Not for Resale,
Full document details: ITU-T G.997.2 CORR 4 2018

Table 7-10 – Line test, diagnostic and status objects

Category/Object	Defined in clause:	Test parameter group	DPU–NB Interface
Actual transmit power spectrum density per sub–carrier			
ACTPSDpsds	7.10.6.1	FE-G1	R (M)
ACTPSDpsus	7.10.6.2	NE-G1	R (M)
Channel characteristics per sub–carrier			
HLOGMTds	7.10.1.1	NE-G2	R(M)
HLOGGds	7.10.7.2	NE-G2	R(M)
HLOGpsds	7.10.7.3	NE-G2	R(M)
HLOGMTus	7.10.1.4	NE-G2	R (M)
HLOGGus	7.10.7.5	NE-G2	R (M)
HLOGpsus	7.10.7.6	NE-G2	R (M)
Signal–to–noise ratio per sub–carrier			
SNRMTds	7.10.8.1	FE-G1	R (M)
SNRGds	7.10.8.2	FE-G1	R (M)
SNRpsds	7.10.8.3	FE-G1	R (M)
SNRMTus	7.10.8.4	NE-G1	R (M)
SNRGus	7.10.8.5	NE-G1	R (M)
SNRpsus	7.10.8.6	NE-G1	R (M)
Quiet line noise per sub-carrier			
QLNMTds	7.10.9.1	FE-G2	R (M)
QLNGds	7.10.9.2	FE-G2	R (M)
QLNpsds	7.10.9.3	FE-G2	R (M)
QLNMTus	7.10.9.4	NE-G2	R (M)
QLNGus	7.10.9.5	NE-G2	R (M)
QLNpsus	7.10.9.6	NE-G2	R (M)
Active line noise per sub-carrier			
ALNMT	7.10.10.1	FE-G2	R (M)
ALNG	7.10.10.2	FE-G2	R (M)
ALNps	7.10.10.3	FE-G2	R (M)
Low power modes			
L2.1-SNRMds	7.10.16.1	Not applicable	R(M)
L2.1-SNRMus	7.10.16.2	Not applicable	R(M)
L2.2-SNRMds	7.10.16.3	Not applicable	R(M)
L2.2-SNRMus	7.10.16.4	Not applicable	R(M)
L2-SNRM-RMCds	7.10.16.5	Not applicable	R(M)
L2-SNRM-RMCus	7.10.16.6	Not applicable	R(M)
Bit allocation per sub–carrier on data symbols			
BITSpsds	7.10.11.1	Not applicable	R (M)
BITSpsus	7.10.11.2	Not applicable	R (M)

Copyright International Telecommunication Union/ITU Telcommunication Sector
Provided by IHS Markit under license with ITU-T
No reproduction or networking permitted without license from IHS
Licensee=/, User=,
Not for Resale,
Full document details: ITU-T G.997.2 CORR 4 2018

Table 7-10 – Line test, diagnostic and status objects

Category/Object	Defined in clause:	Test parameter group	DPU–NB Interface
RMC			
SNRM-RMCds	7.10.12.1	Not applicable	R (M)
SNRM-RMCus	7.10.12.2	Not applicable	R (M)
BITS-RMCpsds	7.10.12.3	Not applicable	R (M)
BITS-RMCpsus	7.10.12.4	Not applicable	R (M)
Test parameter time stamps			
STAMP–TEST–NE-G1	7.10.13.1	Not applicable	R (M)
STAMP–TEST–FE-G1	7.10.13.2	Not applicable	R (M)
STAMP-TEST-NE-G2	7.10.13.3	Not applicable	R (M)
STAMP-TEST-FE-G2	7.10.13.4	Not applicable	R (M)
OLR time stamps			
STAMP–BSWds	7.10.14.1	Not applicable	R (M)
STAMP–BSWus	7.10.14.2	Not applicable	R (M)
STAMP–SRAds	7.10.14.3	Not applicable	R (M)
STAMP–SRAus	7.10.14.4	Not applicable	R (M)
STAMP–FRAds	7.10.14.5	Not applicable	R (M)
STAMP–FRAus	7.10.14.6	Not applicable	R (M)
STAMP–RPAds	7.10.14.7	Not applicable	R (M)
STAMP–RPAus	7.10.14.8	Not applicable	R (M)
STAMP–TIGA	7.10.14.9	Not applicable	R (M)
Signal attenuation			
SATNds	7.10.15.1	FE-G1	R (M)
SATNus	7.10.15.2	NE-G1	R (M)
Vectoring			
XLOGDISTds	7.10.17.1	NE-G2	R (O)
XLOGBANDSds	7.10.17.2	NE-G2	R (O)
XLOGpsds	7.10.17.3	NE-G2	R (O)

Documents
Document Sharing Hub
Copyright International Telecommunication Union/ITU Telcommunication Sector
Provided by IHS Markit under license with ITU-T
No reproduction or networking permitted without license from IHS
Licensee=/, User=,
Not for Resale,
Full document details: ITU-T G.997.2 CORR 4 2018

Table 7-11 – Channel test, diagnostic and status objects

Category/Object	Defined in clause:	Test parameter group	DPU–NB Interface
Actual data rates(downstream/upstream)			
Net Data Rate (NDRds/us)	7.11.1.1	Not applicable	R (M)
Expected Throughput (ETRds/us)	7.11.1.2	Not applicable	R (M)
Gamma Data Rate (GDRds/us)	7.11.1.3	Not applicable	R (M)
Attainable data rates (downstream/upstream)			
Attainable net Data rate (ATTNDRds/us)	7.11.2.1	Not applicable	R (M)
Attainable Expected Throughput (ATTETRds/us)	7.11.2.2	Not applicable	R (M)
Attainable Gamma Data Rate (ATTGDRds/us)	7.11.2.3	Not applicable	R (M)
Actual impulse noise protection (downstream/upstream)			
ACTINPds/us	7.11.3.1	Not applicable	R (M)
ACTINP_REINds/us	7.11.3.2	Not applicable	R (M)
Actual framer setting (downstream/upstream)			
DTU–NFECds/us	7.11.4.1	Not applicable	R (M)
DTU–RFECds/us	7.11.4.2	Not applicable	R (M)
DTU–Qds/us	7.11.4.3	Not applicable	R (M)
Test parameters per time interval (downstream/upstream)			
Error–free bits current 15 minutes (EFB–C15Mds/us)	7.11.5.1	Not applicable	R (M)
Error–free bits previous 15 minutes (EFB–P15Mds/us)	7.11.5.2	Not applicable	R (M)
Error–free bits current 24 hours (EFB–C24Hds/us)	7.11.5.3	Not applicable	R (M)
Error–free bits previous 24 hours (EFB–P24Hds/us)	7.11.5.4	Not applicable	R (M)
MINEFTR current15 minutes (MINEFTR_C15Mds/us)	7.11.5.5	Not applicable	R (M)
MINEFTR previous15 minutes (MINEFTR_P15Mds/us)	7.11.5.6	Not applicable	R (M)
MINEFTR current 24 hours(MINEFTR_C24Hds/us)	7.11.5.7	Not applicable	R (M)
MINEFTR previous 24 hours (MINEFTR_P24Hds/us)	7.11.5.8	Not applicable	R (M)
Low power modes (downstream/upstream)			
L2.1-NDRds/us	7.11.6.1	Not applicable	R(M)
L2.2-NDRds/us	7.11.6.2	Not applicable	R(M)
L2.1-ETRds/us	7.11.6.3	Not applicable	R(M)
L.2.2-ETRds/us	7.11.6.4	Not applicable	R(M)

Copyright International Telecommunication Union/ITU Telcommunication Sector
Provided by IHS Markit under license with ITU-T
No reproduction or networking permitted without license from IHS
Licensee=/, User=,
Not for Resale,
Full document details: ITU-T G.997.2 CORR 4 2018

Table 7-12 – Data path test, diagnostic and status objects

Category/object	Defined in clause:	DPU-NB interface

Table 7-13 – Inventory objects

Category/object	Defined in clause:	DPU-NB interface
FTU related inventory		
FTU-O ITU-T G.994.1 vendor ID (FTUO_GHS_VENDOR)	7.13.1.1	R (M)
FTU-R ITU-T G.994.1 vendor ID (FTUR_GHS_VENDOR)	7.13.1.2	R (M)
FTU-O version number (FTUO_VERSION)	7.13.1.3	R (M)
FTU-R version number (FTU-R VERSION)	7.13.1.4	R (M)
FTU-O self-test result (FTUO-SELFTEST)	7.13.1.5	R (M)
FTU-R self-test result (FTUR_SELFTEST)	7.13.1.6	R (M)
ITU-T G.9701 profile support (FTUO_PROFILES)	7.13.1.7	R (M)
ITU-T G.9701 profile support (FTUR_PROFILES)	7.13.1.8	R (M)
System related inventory		
DPU system vendor ID (DPU_SYSTEM_VENDOR)	7.13.2.1	R (M)
NT system vendor ID (NT_SYSTEM_VENDOR)	7.13.2.2	R (M)
DPU serial number (DPU_SYSTEM_SERIALNR)	7.13.2.3	R (M)
NT serial number (NT_SYSTEM_SERIALNR)	7.13.2.4	R (M)
VCE identifier (VCE_ID)	7.13.2.5	R (M)
VCE port index (VCE_PORT_INDEX)	7.13.2.6	R (M)

Table 7-14 – Link state objects

Category/Object	Defined in clause:	DPU-NB
Link State Test Configuration		
Link State Force (LS-FORCED)	7.14.1.1	R/W (M)
Link State Enabling (LS-ENABLE)	7.14.1.2	R/W (M)
Link state reporting		
Link State (LINK-STATE)	7.14.2.1	R (M)
Link State at update of near-end test parameter group 1 (LINK-STATE-TEST-NE-G1)	7.14.2.2	R (M)
Link State at update of far-end test parameter group 1 (LINK-STATE-TEST-FE-G1)	7.14.2.3	R (M)

Documents
Document Sharing Hub
Copyright International Telecommunication Union/ITU Telcommunication Sector
Provided by IHS Markit under license with ITU-T
No reproduction or networking permitted without license from IHS
Licensee=/, User=,
Not for Resale,
Full document details: ITU-T G.997.2 CORR 4 2018

7.1 Line configuration objects

7.1.0 Profiles

7.1.0.1 ITU-T G.9701 profiles enabling (PROFILES)

Description: Defines for each profile whether operation according to that profile is allowed or disallowed.

Type: Array of PROFILEdescriptor[0...N-1] with N=5.

PROFILEdescriptor

Type: boolean.

Valid values: false (disallowed) and true (allowed).

Bit representation

0 [ITU-T G.9701] profile 106a

1 [ITU-T G.9701] profile 106b

2 [ITU-T G.9701] profile 212a

3 [ITU-T G.9701] profile 106c

4 [ITU-T G.9701] profile 212c

Default value: All elements of the array set to true (All profiles allowed).

Reference: Clause 6 of [ITU-T G.9701].

7.1.1 Time division duplexing (TDD)

7.1.1.1 Number of symbol periods in a TDD frame (MF)

Description: Defines the total number of symbol periods in a TDD frame.

Type: 8-bit unsigned integer.

Valid values: 23 and 36.

Default value: 36.

Reference: Clause 10.5 of [ITU-T G.9701].

7.1.1.2 Number of downstream symbol periods in a TDD frame (Mds)

Description: Defines the total number of symbol positions in a TDD frame allocated for downstream transmission. The total number of symbol positions in a TDD frame allocated for upstream transmission is calculated as Mus = MF--1--Mds.

Type: 8-bit unsigned integer.

Valid values: 10...32 (if MF=36) and 6...19 (if MF=23).

Default value: 28.

NOTE – If MF=23, a value different from the default value needs to be configured (see clause 7.1).

Reference: Clause 10.5 of [ITU-T G.9701].

7.1.1.3 Cyclic extension (CE)

Description: Defines the cyclic extension (L_{CP}) to be used.

Type: 8-bit unsigned integer.

Unit: N/64 samples, with N = index of highest supported downstream data-bearing sub-carrier as defined for the enabled profile (see Table 6-1 of [ITU-T G.9701]) plus one.

Documents
Document Sharing Hub
Copyright International Telecommunication Union/ITU Telcommunication Sector
Provided by IHS Markit under license with ITU-T
No reproduction or networking permitted without license from IHS
Licensee=/, User=,
Not for Resale,
Full document details: ITU-T G.997.2 CORR 4 2018

Valid values: 4, 8, 10, 12, 14, 16, 20, 24, 30 and 33.

Default value: 10.

Reference: Clause 10.4.4 of [ITU-T G.9701].

7.1.2 Power and spectrum usage

7.1.2.1 Downstream maximum aggregate transmit power (MAXATPds)

Description: Defines the maximum aggregate transmit power at the U-O2 reference point in the downstream direction during initialization and showtime (in dBm).

Type: 16-bit signed integer.

Unit: 0.1 dBm.

Valid values: −310...+310 (−31 to +31 dBm).

Default value: 40 (4 dBm).

Reference: Clause 7.3.2 of [ITU-T G.9701].

7.1.2.2 Upstream maximum aggregate transmit power (MAXATPus)

Description: Defines the maximum aggregate transmit power at the U-R2 reference point in the upstream direction during initialization and showtime (in dBm).

Type: 16-bit signed integer.

Unit: 0.1 dBm.

Valid values: −310...+310 (−31 to +31 dBm).

Default value: 40 (4 dBm).

Reference: Clause 7.3.2 of [ITU-T G.9701].

7.1.2.3 Downstream sub-carrier masking (CARMASKds)

Description: Defines the masked sub-carrier bands in the downstream direction. All sub-carriers within the band, i.e., with indices greater than or equal to the start sub-carrier index and less than or equal to the stop sub-carrier index, are masked, i.e., have a transmit power set to zero (linear scale).

Type: Array of CARMASKdescriptor[0...N-1], with N <= 32.

CARMASKdescriptor:

Type: Record of a start sub-carrier index and a stop sub-carrier index.

Sub-carrier index:

Type: 16-bit unsigned integer.

Valid values: 0...4095 (sub-carrier index 0 to 4095).

Default value: Empty array (No masked sub-carriers).

Reference: Clause 6.3 of [ITU-T G.9700], and clause 7.3.1.3 of [ITU-T G.9701].

7.1.2.4 Upstream sub-carrier masking (CARMASKus)

Description: Defines the masked sub-carrier bands in the upstream direction. All sub-carriers within the band, i.e., with indices greater than or equal to the start sub-carrier index and less than or equal to the stop sub-carrier index, have a transmit power set to zero (linear scale).

Type: Array of CARMASKdescriptor[0...N-1], with N <= 32.

CARMASKdescriptor: See CARMASKds in clause 7.1.2.3.

Documents
Document Sharing Hub
Copyright International Telecommunication Union/ITU Telcommunication Sector
Provided by IHS Markit under license with ITU-T
No reproduction or networking permitted without license from IHS
Licensee=/, User=,
Not for Resale,
Full document details: ITU-T G.997.2 CORR 4 2018

Default value: Empty array (No masked sub-carriers).

Reference: Clause 6.3 of [ITU-T G.9700] and clause 7.3.1.3 of [ITU-T G.9701].

7.1.2.5 Downstream PSD mask (MIBPSDMASKds)

Description: Defines the downstream power spectral density (PSD) mask applicable at the U-O2 reference point. Requirements for a valid MIBPSDMASKds are defined in clauses 7.3.1.1.2.1 and 7.3.1.1.2.2 of [ITU-T G.9701].

Type: Array of MIBPSDMASKdescriptor[0...N-1], with N=0 or 2<=N <= 32.

PSDMASKdescriptor:

Type: Record of a sub-carrier index and a PSD level.

Sub-carrier index:

Type: 16-bit unsigned integer.

Valid values: 0...4095 (sub-carrier index 0 to 4095).

PSD level:

Type: 8-bit unsigned integer.

Unit: −0.5 dBm/Hz.

Valid values: 0...255 (0 to −127.5 dBm/Hz).

Default value: Empty array (Limit PSD mask defined in [ITU-T G.9700]).

Reference: Clause 7.3.1.1 of [ITU-T G.9701].

7.1.2.6 Upstream PSD mask (MIBPSDMASKus)

Description: Defines the upstream PSD mask applicable at the U-R2 reference point. Requirements for a valid MIBPSDMASKus are defined in clauses 7.3.1.1.2.1 and 7.3.1.1.2.2 of [ITU-T G.9701].

Type: Array of MIBPSDMASKdescriptor[0...N-1], with N=0 or 2<=N <= 32.

PSDMASKdescriptor: See MIBPSDMASKds in clause 7.1.2.5.

Default value: Empty array (Limit PSD mask defined in [ITU-T G.9700]).

Reference: Clause 7.3.1.1 of [ITU-T G.9701].

7.1.2.7 RFI bands (RFIBANDS)

Description: Defines the bands where the PSD shall be reduced as specified in clause 7.3.1.2 of [ITU-T G.9701].

Type: Array of RFIBANDdescriptor[0...N-1], with N <= 32.

RFIBANDdescriptor:

Type: Record of a start sub-carrier index and a stop sub-carrier index.

Sub-carrier index:

Type: 16-bit unsigned integer.

Valid values: 0...4095 (sub-carrier index 0 to 4095).

Default value: Empty array (No RFI bands, no PSD reduction).

Reference: Clauses 7.3.1.2 and 12.3.2.1.1 of [ITU-T G.9701].

7.1.2.8 International amateur radio bands (IARBANDS)

Description: Defines for each international amateur radio (IAR) band whether transmit PSD reduction is enabled or disabled in that band.

Documents
Document Sharing Hub
Copyright International Telecommunication Union/ITU Telcommunication Sector
Provided by IHS Markit under license with ITU-T
No reproduction or networking permitted without license from IHS
Licensee=/, User=,
Not for Resale,
Full document details: ITU-T G.997.2 CORR 4 2018

Type: Array of IARBANDdescriptor[0...12].

IARBANDdescriptor:

Type: boolean.

Valid values: false (disabled) and true (enabled).

Bit representation:

0 International amateur radio band 1800-2000 kHz

1 International amateur radio band 3500-4000 kHz

2 International amateur radio band 7000-7300 kHz

3 International amateur radio band 10100-10150 kHz

4 International amateur radio band 14000-14350 kHz

5 International amateur radio band 18068-18168 kHz

6 International amateur radio band 21000-21450 kHz

7 International amateur radio band 24890-24990 kHz

8 International amateur radio band 28000-29700 kHz

9 International amateur radio band 50000-54000 kHz

10 International amateur radio band 70000-70500 kHz

11 International amateur radio band 144000-148000 kHz

12 International amateur radio band 5351.5-5366.5 kHz

Default value: All elements of the array set to false (All IAR bands disabled, no PSD reduction).

Reference: Clauses 7.3.1.2 and 12.3.2.1.1 of [ITU-T G.9701], Tables 11.70.8 and 11.70.8.1 of [ITU-T G.994.1].

7.1.2.9 Upstream power back-off reference PSD (UPBOPSDA)

Description: Defines the parameter *a* for the UPBO reference PSD used to compute the upstream power back-off for the upstream frequency band.

Type: 16-bit unsigned integer.

Unit: 0.01 dBm/Hz.

Offset: 40 dBm/Hz.

Valid values: 0...4095 (40 to 80.95 dBm/Hz).

Default value: 0 (40 dBm/Hz).

Reference: Clause 7.3.1.4 of [ITU-T G.9701].

7.1.2.10 Upstream power back-off reference PSD (UPBOPSDB)

Description: Defines the parameter *b* for the UPBO reference PSD used to compute the upstream power back-off for the upstream frequency band.

Type: 16-bit unsigned integer.

Unit: 0.01 dBm/Hz.

Valid values: 0...4095 (0 to 40.95 dBm/Hz).

Default value: 0 (0 dBm/Hz).

Reference: Clause 7.3.1.4 of [ITU-T G.9701].

Documents
Document Sharing Hub
Copyright International Telecommunication Union/ITU Telcommunication Sector
Provided by IHS Markit under license with ITU-T
No reproduction or networking permitted without license from IHS
Licensee=/, User=,
Not for Resale,
Full document details: ITU-T G.997.2 CORR 4 2018

7.1.2.11 Upstream electrical length (UPBOKL)

Description: Defines the electrical length kl_0 (expressed in dB at 1 MHz).

Type: 16-bit unsigned integer.

Unit: 0.1 dB.

Valid values: 0...1280 (0 to 128 dB).

Default value: 0 (0 dB)

Reference: Clause 7.3.1.4.2.1 of [ITU-T G.9701].

7.1.2.12 Force electrical length (UPBOKLF)

Description: Defines whether or not the FTU-R is forced to use the electrical length kl_0 = UPBOKL to compute the UPBOMASK. If not forced, the FTUs determine the electrical length kl_0.

Type: boolean.

Valid values: false (not forced) and true (forced).

Default value: false (not forced).

Reference: Clause 7.3.1.4.2.1 of [ITU-T G.9701].

7.1.2.13 UPBO reference electrical length per band (UPBOKLREF)

Description: Defines the UPBO reference electrical length kl_{0_REF} used to compute the upstream power back-off for the Equalized FEXT UPBO method. If kl_{0_REF} = 0 (special value) then the Equal PSD UPBO method is used.

Type: 16-bit unsigned integer.

Unit: 0.1 dB.

Valid values: 0 (special value) and 18...255 (1.8 to 25.5 dB).

Default value: 0 (special value).

Reference: Clause 7.3.1.4.2.2 of [ITU-T G.9701].

7.1.3 Noise margin

7.1.3.1 Downstream target noise margin (TARSNRMds)

Description: Defines the downstream target noise margin for the channel initialization policy.

Type: 16-bit unsigned integer.

Unit: 0.1 dB.

Valid values: 0...310 (0 to 31 dB).

Default value: 60 (6 dB).

Reference: Clause 12.3.7 of [ITU-T G.9701].

7.1.3.2 Upstream target noise margin (TARSNRMus)

Description: Defines the upstream target noise margin used in the channel initialization policy.

Type: 16-bit unsigned integer.

Unit: 0.1 dB.

Valid values: 0...310 (0 to 31 dB).

Default value: 60 (6 dB).

Documents
Document Sharing Hub
Copyright International Telecommunication Union/ITU Telcommunication Sector
Provided by IHS Markit under license with ITU-T
No reproduction or networking permitted without license from IHS
Licensee=/, User=,
Not for Resale,
Full document details: ITU-T G.997.2 CORR 4 2018

Reference: Clause 12.3.7 of [ITU-T G.9701].

7.1.3.3 Upstream maximum noise margin (MAXSNRMus)

Description: Defines the upstream maximum noise margin used in the channel initialization policy. The special value indicates there is no maximum bound for the upstream noise margin (i.e., the upstream maximum noise margin is infinite).

Type: 16-bit unsigned integer.

Unit: 0.1 dB.

Valid values: 0...310 (0 to 31 dB) and 511 (special value).

Default value: 511 (special value).

Reference: Clause 12.3.7 of [ITU-T G.9701].

7.1.3.4 Downstream minimum noise margin (MINSNRMds)

Description: Defines the downstream minimum noise margin the FTU-R receiver shall tolerate. If the downstream noise margin (SNRMds) falls below this level, a loss-of-margin (*lom*) defect occurs. Upon persistency of the *lom* defect, the FTU-R triggers a re-initialization (see clause 12.1.4.2 of [ITU-T G.9701]).

Type: 16-bit unsigned integer.

Unit: 0.1 dB.

Valid values: 0...310 (0 to 31 dB).

Default value: 0 (0 dB).

Reference: Clause 12.3.4.2.1 of [ITU-T G.9701].

7.1.3.5 Upstream minimum noise margin (MINSNRMus)

Description: Defines the upstream minimum noise margin the FTU-O receiver shall tolerate. If the upstream noise margin (SNRMus) falls below this level, the FTU-O requests the FTU-R to increase the FTU-R transmit power. If an increase to FTU-R transmit power is not possible, a *lom* defect occurs. Upon persistency of the *lom* defect, the FTU-O triggers a re-initialization (see clause 12.1.4.2 of [ITU-T G.9701]).

Type: 16-bit unsigned integer.

Unit: 0.1 dB.

Valid values: 0...310 (0 to 31 dB).

Default value: 0 (0 dB).

Reference: Clause 12.3.4.2.1 of [ITU-T G.9701].

7.1.4 Seamless rate adaptation

7.1.4.1 Downstream upshift noise margin (SRA-USNRMds)

Description: If the downstream noise margin (SNRMds) is above the downstream upshift noise margin and stays above that for more than the time specified by the downstream minimum upshift rate adaptation interval (SRA-UTIMEds), the FTU-R autonomously attempts to increase the downstream net data rate (NDRds).

Type: 16-bit unsigned integer.

Unit: 0.1 dB.

Valid values: 0...310 (0 to 31 dB).

Documents
Document Sharing Hub
Copyright International Telecommunication Union/ITU Telcommunication Sector
Provided by IHS Markit under license with ITU-T
No reproduction or networking permitted without license from IHS
Licensee=/, User=,
Not for Resale,
Full document details: ITU-T G.997.2 CORR 4 2018

Default value: 70 (7 dB).

Reference: Clause 12.3.4.2.1 of [ITU-T G.9701].

7.1.4.2 Upstream upshift noise margin (SRA-USNRMus)

Description: If the upstream noise margin (SNRMus) is above the upstream upshift noise margin and stays above that for more than the time specified by the upstream minimum upshift rate adaptation interval (SRA-UTIMEus), the FTU-O autonomously attempts to increase the upstream net data rate (NDRus).

Type: 16-bit unsigned integer.

Unit: 0.1 dB.

Valid values: 0...310 (0 to 31 dB).

Default value: 70 (7 dB).

Reference: Clause 12.3.4.2.1 of [ITU-T G.9701].

7.1.4.3 Downstream minimum time interval for upshift SRA (SRA-UTIMEds)

Description: Defines the interval of time the downstream noise margin (SNRMds) should stay above the downstream upshift noise margin (SRA-USNRMds) before the FTU-R autonomously attempts to increase the NDRds.

Type: 16-bit unsigned integer.

Unit: 1 s.

Valid values: 0...16383 (0 to 2^{14}–1 s).

Default value: 8 (8 s).

Reference: Clause 12.3.4.2.1 of [ITU-T G.9701].

7.1.4.4 Upstream minimum time interval for upshift SRA (SRA-UTIMEus)

Description: Defines the interval of time the upstream noise margin (SNRMus) should stay above the upstream upshift noise margin (SRA-USNRMus) before the FTU-O autonomously attempts to increase the NDRus.

Type: 16-bit unsigned integer.

Unit: 1 s.

Valid values: 0...16383 (0 to 2^{14}–1 s).

Default value: 8 (8 s).

Reference: Clause 12.3.4.2.1 of [ITU-T G.9701].

7.1.4.5 Downstream downshift noise margin (SRA-DSNRMds)

Description: If the downstream noise margin (SNRMds) is below the downstream downshift noise margin and stays below that for more than the time specified by the downstream minimum downshift rate adaptation interval (SRA-DTIMEds), the FTU-R autonomously attempts to decrease the NDRds.

Type: 16-bit unsigned integer.

Unit: 0.1 dB.

Valid values: 0...310 (0 to 31 dB).

Default value: 50 (5 dB).

Reference: Clause 12.3.4.2.1 of [ITU-T G.9701].

Documents
Document Sharing Hub
Copyright International Telecommunication Union/ITU Telcommunication Sector
Provided by IHS Markit under license with ITU-T
No reproduction or networking permitted without license from IHS
Licensee=/, User=,
Not for Resale,
Full document details: ITU-T G.997.2 CORR 4 2018

7.1.4.6 Upstream downshift noise margin (SRA-DSNRMus)

Description: If the upstream noise margin (SNRMus) is below the upstream downshift noise margin and stays below that for more than the time specified by the upstream minimum downshift rate adaptation interval (SRA-DTIMEus), the FTU-O autonomously attempts to decrease the NDRus.

Type: 16-bit unsigned integer.

Unit: 0.1 dB.

Valid values: 0..310 (0 to 31 dB).

Default value: 50 (5 dB).

Reference: Clause 12.3.4.2.1 of [ITU-T G.9701].

7.1.4.7 Downstream minimum time interval for downshift SRA (SRA-DTIMEds)

Description: Defines the interval of time the downstream noise margin (SNRMds) should stay below the downstream downshift noise margin (SRA-DSNRMds) before the FTU-R autonomously attempts to decrease the NDRds.

Type: 16-bit unsigned integer.

Unit: 1 s.

Valid values: 0...16383 (0 to 2^{14}–1 s).

Default value: 2 (2 s).

Reference: Clause 12.3.4.2.1 of [ITU-T G.9701].

7.1.4.8 Upstream minimum time interval for downshift SRA (SRA-DTIMEus)

Description: Defines the interval of time the upstream noise margin (SNRMus) should stay below the upstream downshift noise margin (SRA-DSNRMus) before the FTU-O autonomously attempts to decrease the NDRus.

Type: 16-bit unsigned integer.

Unit: 1 s.

Valid values: 0...16383 (0 to 2^{14}-1 s).

Default value: 2 (2 s).

Reference: Clause 12.3.4.2.1 of [ITU-T G.9701].

7.1.5 Fast rate adaptation

7.1.5.1 Downstream FRA time window (FRA-TIMEds)

Description: Defines the duration of the time window used in the standard FRA triggering criteria (see clause 13.4.3.2 of [ITU-T G.9701]) for the downstream direction. The special value 0 indicates that vendor discretionary values for *fra-ntones*, *fra-rtx-uc*, and *fra-time* may be used in the downstream direction.

Type: 8-bit unsigned integer.

Unit: 1 logical frame length.

Valid values: 0 (special value) and (1... ~~8~~ 24 (if MF=36) or 1... ~~12~~ 36 (if MF=23)).

Default value: 8

Reference: Clause 13.3.1.1.1.1 of [ITU-T G.9701].

Documents
Document Sharing Hub
Copyright International Telecommunication Union/ITU Telcommunication Sector
Provided by IHS Markit under license with ITU-T
No reproduction or networking permitted without license from IHS
Licensee=/, User=,
Not for Resale,
Full document details: ITU-T G.997.2 CORR 4 2018

7.1.5.2 Upstream FRA time window (FRA-TIMEus)

Description: Defines the duration of the time window used in the standard FRA triggering criteria (see clause 13.4.3.2 of [ITU-T G.9701]) for the upstream direction. The special value 0 indicates that vendor discretionary values for *fra-ntones*, *fra-rtx-uc*, and *fra-time* may be used in the upstream direction.

Type: 8-bit unsigned integer.

Unit: 1 logical frame length.

Valid values: 0 (special value) and (1... ~~8~~ 24 (if MF=36) or 1... ~~12~~ 36 (if MF=23)).

Default value: 8.

Reference: Clause 13.3.1.1.1.1 of [ITU-T G.9701].

7.1.5.3 Downstream FRA minimum percentage of degraded tones (FRA-NTONESds)

Description: Defines the minimum percentage of loaded sub-carriers that are detected as degraded throughout a time window equal to FRA-TIMEds in order to arm the first FRA triggering criteria (see clause 13.3.1.1.1.5 of [ITU-T G.9701]) in the downstream direction. The special value 0 indicates that monitoring of the percentage of degraded sub-carriers is disabled.

Type: 8-bit unsigned integer.

Valid values: 0 and 1...100.

Default value: 50.

Reference: Clause 13.3.1.1.1.2 of [ITU-T G.9701].

7.1.5.4 Upstream FRA minimum percentage of degraded tones (FRA-NTONESus)

Description: Defines the minimum percentage of loaded sub-carriers (i.e., sub-carriers with bi>0) that are detected as degraded throughout a time window equal to FRA-TIMEds in order to arm the first FRA triggering criteria (see clause 13.3.1.1.1.5 of [ITU-T G.9701]) in the upstream direction. The special value 0 indicates that monitoring of the percentage of degraded sub-carriers is disabled.

Type: 8-bit unsigned integer.

Valid values: 0 and 1...100.

Default value: 50.

Reference: Clause 13.3.1.1.1.2 of [ITU-T G.9701].

7.1.5.5 Downstream FRA number of uncorrectable DTU (FRA-RTXUCds)

Description: Defines the minimum number of *rtx-uc* anomalies received throughout a time window equal to FRA-TIMEds in order to arm the second FRA triggering criteria (see clause 13.3.1.1.1.5 of [ITU-T G.9701]) in the downstream direction. The special value 0 indicates that monitoring of the number of *rtx-uc* anomalies is disabled.

Type: 16-bit unsigned integer.

Valid values: 0 and 1...1023.

Default value: 150.

Reference: Clause 13.3.1.1.1.3 of [ITU-T G.9701].

7.1.5.6 Upstream FRA number of uncorrectable DTU (FRA-RTXUCus)

Description: Defines the minimum number of *rtx-uc* anomalies received throughout a time window equal to FRA-TIMEds in order to arm the second FRA triggering criteria (see clause 13.3.1.1.1.5 of

Documents
Document Sharing Hub
Copyright International Telecommunication Union/ITU Telcommunication Sector
Provided by IHS Markit under license with ITU-T
No reproduction or networking permitted without license from IHS
Licensee=/, User=,
Not for Resale,
Full document details: ITU-T G.997.2 CORR 4 2018

[ITU-T G.9701]) in the upstream direction. The special value 0 indicates that monitoring of the number of *rtx-uc* anomalies is disabled.

Type: 16-bit unsigned integer.

Valid values: 0 and 1...1023.

Default value: 150.

Reference: Clause 13.3.1.1.1.3 of [ITU-T G.9701].

7.1.5.7 Downstream vendor discretionary FRA triggering criteria (FRA-VENDISCds)

Description: Defines whether vendor discretionary FRA triggering criteria may be used (enabled) or not (disabled) in the downstream direction.

Type: boolean.

Valid values: false (disabled) and true (enabled).

Default value: false (disabled).

Reference: Clause 13.3.1.1.1.4 of [ITU-T G.9701].

7.1.5.8 Upstream vendor discretionary FRA triggering criteria (FRA-VENDISCus)

Description: Defines whether vendor discretionary FRA triggering criteria may be used (enabled) or not (disabled) in the upstream direction.

Type: boolean.

Valid values: false (disabled) and true (enabled).

Default value: false (disabled).

Reference: Clause 13.3.1.1.1.4 of [ITU-T G.9701].

7.1.6 Robust management channel

7.1.6.1 Downstream target noise margin for RMC (TARSNRM-RMCds)

Description: Defines the downstream RMC noise margin (SNRM-RMCds) that the FTU-R receiver shall achieve, relative to the BER requirement, or better, to successfully complete initialization.

Type: 16-bit unsigned integer.

Unit: 0.1 dB.

Valid values: 0...310 (0 to 31 dB).

Default value: 60 (6 dB).

Reference: Clause 12.3.3.2.1 of [ITU-T G.9701].

7.1.6.2 Upstream target noise margin (TARSNRM-RMCus)

Description: Defines the upstream RMC noise margin (SNRM-RMCus) that the FTU-O receiver shall achieve, relative to the BER requirement, or better, to successfully complete initialization.

Type: 16-bit unsigned integer.

Unit: 0.1 dB.

Valid values: 0...310 (0 to 31 dB).

Default value: 60 (6 dB).

Reference: Clause 12.3.3.2.1 of [ITU-T G.9701].

Documents
Document Sharing Hub
Copyright International Telecommunication Union/ITU Telcommunication Sector
Provided by IHS Markit under license with ITU-T
No reproduction or networking permitted without license from IHS
Licensee=/, User=,
Not for Resale,
Full document details: ITU-T G.997.2 CORR 4 2018

7.1.6.3 Downstream minimum noise margin for RMC (MINSNRM-RMCds)

Description: Defines the downstream minimum noise margin the FTU-R receiver tolerates for the RMC. If the downstream RMC noise margin (SNRM-RMCds) falls below this level, the FTU-R initiates the RMC parameter adjustment (RPA) procedure.

Type: 16-bit unsigned integer.

Unit: 0.1 dB.

Valid values: 0...310 (0 to 31 dB).

Default value: 0 (0 dB).

Reference: Clause 13.2.1.3 of [ITU-T G.9701].

7.1.6.4 Upstream minimum noise margin for RMC (MINSNRM-RMCus)

Description: Defines the upstream minimum noise margin the FTU-O receiver tolerates for the RMC. If the downstream RMC noise margin (SNRM-RMCus) falls below this level, the FTU-O initiates the RPA procedure.

Type: 16-bit unsigned integer.

Unit: 0.1 dB.

Valid values: 0...310 (0 to 31 dB).

Default value: 0 (0 dB).

Reference: Clause 13.2.1.3 of [ITU-T G.9701].

7.1.6.5 Downstream maximum bitloading for RMC (MAXBL-RMCds)

Description: Defines the maximum allowed bit-loading for the downstream RMC sub-carriers.

Type: 8-bit unsigned integer.

Valid values: 2...6.

Default value: 6.

Reference: Clause 12.3.3.2.1 of [ITU-T G.9701].

7.1.6.6 Upstream maximum bitloading for RMC (MAXBL-RMCus)

Description: Defines the maximum allowed bit-loading for the upstream RMC sub-carriers.

Type: 8-bit unsigned integer.

Valid values: 2...6.

Default value: 6.

Reference: Clause 12.3.3.2.1 of [ITU-T G.9701].

7.1.7 Vectoring

7.1.7.1 FEXT cancellation enabling/disabling downstream (FEXT_TO_CANCEL_ENABLEds)

Description: Defines whether FEXT cancellation in the downstream direction from all the other vectored lines into the line in the vectored group is enabled or disabled.

Type: boolean.

Valid values: false (disabled) or true (enabled).

Default value: true (enabled).

Documents
Document Sharing Hub
Copyright International Telecommunication Union/ITU Telcommunication Sector
Provided by IHS Markit under license with ITU-T
No reproduction or networking permitted without license from IHS
Licensee=/, User=,
Not for Resale,
Full document details: ITU-T G.997.2 CORR 4 2018

Reference: Clause 11.4.3.1 of [ITU-T G.9701].

7.1.7.2 FEXT cancellation enabling/disabling upstream (FEXT_TO_CANCEL_ENABLEus)

Description: Defines whether FEXT cancellation in the upstream direction from all the other vectored lines into the line in the vectored group is enabled or disabled.

Type: boolean.

Valid values: false (disabled) or true (enabled).

Default value: true (enabled).

Reference: Clause 11.4.3.1 of [ITU-T G.9701].

7.1.7.3 XLOG requested subcarrier group size (XLOGGREQds)

Description: This parameter is the requested lower bound on the value of XLOGGds in the reporting of Xlogpsds

Type: 8-bit signed integer.

Unit: 1 sub-carrier.

Valid values: 1, 2, 4, 8, 16, 32, and 64.

Default value: 1.

Reference: Clause 11.4.3.2 of [ITU-T G.9701].

7.1.7.4 XLOG requested disturber index (XLOGDREQds)

Description: This parameter is the requested value of the VCE_port_index (XLOGDISTds) for the disturber line in the reporting of XLOGpsds.

Type: 16-bit unsigned integer.

Valid values: 1..65535.

Default value: 1.

Reference: Clause 11.4.3.2 of [ITU-T G.9701].

7.1.8 Fast-retrain policy

7.1.8.1 Downstream los defect persistency (LOS_PERSISTENCYds)

Description: Defines the downstream *los* defect persistency for triggering a re-initialization (see clause 12.1.4.2) at the FTU-R receiver, as part of the fast-retrain policy.

Type: 8-bit unsigned integer.

Unit: 0.1 s.

Valid values: 1...20 (0.1 to 2 s).

Default value: 2 (0.2 s).

Reference: Clause 12.1.4.3.1 of [ITU-T G.9701].

7.1.8.2 Upstream los defect persistency (LOS_PERSISTENCYus)

Description: Defines the upstream *los* defect persistency for triggering a re-initialization (see clause 12.1.4.2) at the FTU-O receiver, as part of the fast-retrain policy.

Type: 8-bit unsigned integer.

Unit: 0.1 s.

Documents
Document Sharing Hub
Copyright International Telecommunication Union/ITU Telcommunication Sector
Provided by IHS Markit under license with ITU-T
No reproduction or networking permitted without license from IHS
Licensee=/, User=,
Not for Resale,
Full document details: ITU-T G.997.2 CORR 4 2018