INTERNATIONAL TELECOMMUNICATION UNION

ITU-T G.7713.3/Y.1704.3

(03/2003)

TELECOMMUNICATION
STANDARDIZATION SECTOR
OF ITU

SERIES G: TRANSMISSION SYSTEMS AND MEDIA, DIGITAL SYSTEMS AND NETWORKS

Digital terminal equipments – Operations, administration and maintenance features of transmission equipment

SERIES Y: GLOBAL INFORMATION INFRASTRUCTURE AND INTERNET PROTOCOL ASPECTS

Internet protocol aspects – Operation, administration and maintenance

Distributed Call and Connection Management: Signalling mechanism using GMPLS CR-LDP

ITU-T Recommendation G.7713.3/Y.1704.3

Documents
Document Sharing Hub

Copyright International Telecommunication Union/ITU Telcommunication Sector
Provided by IHS Markit under license with ITU-T
No reproduction or networking permitted without license from IHS
Full document details: ITU-T Y.1704.3 2003

Licensee=/, User=,
Not for Resale,

ITU-T G-SERIES RECOMMENDATIONS

TRANSMISSION SYSTEMS AND MEDIA, DIGITAL SYSTEMS AND NETWORKS

INTERNATIONAL TELEPHONE CONNECTIONS AND CIRCUITS	G.100–G.199
GENERAL CHARACTERISTICS COMMON TO ALL ANALOGUE CARRIER-TRANSMISSION SYSTEMS	G.200–G.299
INDIVIDUAL CHARACTERISTICS OF INTERNATIONAL CARRIER TELEPHONE SYSTEMS ON METALLIC LINES	G.300–G.399
GENERAL CHARACTERISTICS OF INTERNATIONAL CARRIER TELEPHONE SYSTEMS ON RADIO-RELAY OR SATELLITE LINKS AND INTERCONNECTION WITH METALLIC LINES	G.400–G.449
COORDINATION OF RADIOTELEPHONY AND LINE TELEPHONY	G.450–G.499
TESTING EQUIPMENTS	G.500–G.599
TRANSMISSION MEDIA CHARACTERISTICS	G.600–G.699
DIGITAL TERMINAL EQUIPMENTS	G.700–G.799
DIGITAL NETWORKS	G.800–G.899
DIGITAL SECTIONS AND DIGITAL LINE SYSTEM	G.900–G.999
QUALITY OF SERVICE AND PERFORMANCE	G.1000–G.1999
TRANSMISSION MEDIA CHARACTERISTICS	G.6000–G.6999
DIGITAL TERMINAL EQUIPMENTS	G.7000–G.7999
General	G.7000–G.7099
Coding of analogue signals by pulse code modulation	G.7100–G.7199
Coding of analogue signals by methods other than PCM	G.7200–G.7299
Principal characteristics of primary multiplex equipment	G.7300–G.7399
Principal characteristics of second order multiplex equipment	G.7400–G.7499
Principal characteristics of higher order multiplex equipment	G.7500–G.7599
Principal characteristics of transcoder and digital multiplication equipment	G.7600–G.7699
Operations, administration and maintenance features of transmission equipment	**G.7700–G.7799**
Principal characteristics of multiplexing equipment for the synchronous digital hierarchy	G.7800–G.7899
Other terminal equipment	G.7900–G.7999
DIGITAL NETWORKS	G.8000–G.8999

For further details, please refer to the list of ITU-T Recommendations.

Documents
Document Sharing Hub

Copyright International Telecommunication Union/ITU Telcommunication Sector
Provided by IHS Markit under license with ITU-T
No reproduction or networking permitted without license from IHS
Licensee=/, User=,
Not for Resale,
Full document details: ITU-T Y.1704.3 2003

ITU-T Recommendation G.7713.3/Y.1704.3

Distributed Call and Connection Management: Signalling mechanism using GMPLS CR-LDP

Summary

This Recommendation specifies the signalling mechanism and protocol for distributed call and connection management based on GMPLS CR-LDP. This signalling protocol is applicable at the UNI, I-NNI and E-NNI and provides for automated call and connection operations relating to ASTN and ASON. Routing, DCN usage, and automatic discovery are beyond the scope of this Recommendation. Items covered in this Recommendation include:

– CR-LDP messages;

– CR-LDP attributes; and

– CR-LDP signal flows.

This Recommendation meets the requirements of ITU-T Rec. G.7713/Y.1704 and is functionally similar to ITU-T Recs G.7713.1/Y.1704.1 and G.7713.2/Y.1704.2.

Source

ITU-T Recommendation G.7713.3 was approved by ITU-T Study Group 15 (2001-2004) under the ITU-T Recommendation A.8 procedure on 16 March 2003.

History

This Recommendation forms part of a suite of Recommendations covering the full functionality of the automatic switched transport network (ASTN).

Document history	
Issue	**Notes**
0.1	Version 0.1 of G.7713.3/Y.1704.3 (05/2002)
0.2	New text on SPC, signal flow diagram, label scope, removed crankback
0.3	Revisions from drafting in Q14/15 interim meeting – Ottawa Oct. 7-11, 2002
0.4	Editorial revisions for Geneva meeting in January 2003
0.5	Revisions based on contributions at the SG15 meeting in Geneva, January 2003.

Documents
Document Sharing Hub

Copyright International Telecommunication Union/ITU Telcommunication Sector
Provided by IHS Markit under license with ITU-T
No reproduction or networking permitted without license from IHS
Full document details: ITU-T Y.1704.3 2003
Licensee=/, User=,
Not for Resale,

FOREWORD

The International Telecommunication Union (ITU) is the United Nations specialized agency in the field of telecommunications. The ITU Telecommunication Standardization Sector (ITU-T) is a permanent organ of ITU. ITU-T is responsible for studying technical, operating and tariff questions and issuing Recommendations on them with a view to standardizing telecommunications on a worldwide basis.

The World Telecommunication Standardization Assembly (WTSA), which meets every four years, establishes the topics for study by the ITU-T study groups which, in turn, produce Recommendations on these topics.

The approval of ITU-T Recommendations is covered by the procedure laid down in WTSA Resolution 1.

In some areas of information technology which fall within ITU-T's purview, the necessary standards are prepared on a collaborative basis with ISO and IEC.

NOTE

In this Recommendation, the expression "Administration" is used for conciseness to indicate both a telecommunication administration and a recognized operating agency.

Compliance with this Recommendation is voluntary. However, the Recommendation may contain certain mandatory provisions (to ensure e.g. interoperability or applicability) and compliance with the Recommendation is achieved when all of these mandatory provisions are met. The words "shall" or some other obligatory language such as "must" and the negative equivalents are used to express requirements. The use of such words does not suggest that compliance with the Recommendation is required of any party.

INTELLECTUAL PROPERTY RIGHTS

ITU draws attention to the possibility that the practice or implementation of this Recommendation may involve the use of a claimed Intellectual Property Right. ITU takes no position concerning the evidence, validity or applicability of claimed Intellectual Property Rights, whether asserted by ITU members or others outside of the Recommendation development process.

As of the date of approval of this Recommendation, ITU had not received notice of intellectual property, protected by patents, which may be required to implement this Recommendation. However, implementors are cautioned that this may not represent the latest information and are therefore strongly urged to consult the TSB patent database.

© ITU 2003

All rights reserved. No part of this publication may be reproduced, by any means whatsoever, without the prior written permission of ITU.

Copyright International Telecommunication Union/ITU Telcommunication Sector
Provided by IHS Markit under license with ITU-T
No reproduction or networking permitted without license from IHS
Licensee=/, User=,
Not for Resale,
Full document details: ITU-T Y.1704.3 2003

CONTENTS

		Page
1	Scope	1
2	References	1
3	Terms and definitions	2
4	Abbreviations and acronyms	3
5	Conventions	3
6	Assumptions	4
7	Overview and applications	4
7.1	CR-LDP overview	4
7.2	Support for basic call identifier	5
7.3	CR-LDP at UNI reference point	5
7.4	CR-LDP at I-NNI reference point	5
7.5	CR-LDP at E-NNI reference point	5
7.6	CR-LDP support for SPC	6
7.7	Defect handling	7
8	GMPLS CR-LDP messages	8
8.1	Call Setup message	11
8.2	Call Release message	12
8.3	Label Request message	12
8.4	Label Mapping message	12
8.5	Initialization message	13
8.6	Hello message	13
8.7	KeepAlive message	13
8.8	Label Release message	13
8.9	Label Withdraw message	13
8.10	Label Abort message	13
8.11	Notification message	13
8.12	Query, Query Reply, and Partial Query reply messages	14
9	GMPLS CR-LDP attributes	16
9.1	Source Id TLV	16
9.2	Dest Id TLV	16
9.3	ER TLV	16
9.4	Call Id TLV	16
9.5	Call Capability TLV	18
9.6	Generalized Label Request TLV	18
9.7	Generalized Label TLV	18
9.8	Upstream Label TLV	18
9.9	Acceptable Label TLV	18
9.10	Label Set TLV	18

Documents
Document Sharing Hub
Copyright International Telecommunication Union/ITU Telcommunication Sector
Provided by IHS Markit under license with ITU-T
No reproduction or networking permitted without license from IHS
Full document details: ITU-T Y.1704.3 2003
Licensee=/, User=,
Not for Resale,

Page

9.11 Suggested Label Set TLV 18
9.12 Admin Status TLV 18
9.13 Contract Id TLV 18
9.14 UNI Service TLV 19
9.15 Feedback TLV 19
9.16 Local Connection Id TLV 19
9.17 Protection TLV 19
9.18 Diversity TLV 19
9.19 Status TLV 19
9.20 Interface TLV 19
10 Call and connection control procedures using CR-LDP 19
10.1 CR-LDP discovery and session initialization 19
10.2 Call setup using CR-LDP 20
10.3 Call Release using CR-LDP 22
10.4 Connection setup using CR-LDP 23
10.5 Connection modification using CR-LDP 24
10.6 Connection release using CR-LDP 25
10.7 Feedback using CR-LDP 26
10.8 Failure detection and recovery in CR-LDP 27
11 Error sequences 28
Annex A – Technology-specific terminology updates 29
Annex B – TLV code points 30
Annex C – Label scope 30
C.1 Scope of the label 30
C.2 A label association function 31
Appendix I – Mapping of messages 32
I.1 Mapping of UNI messages 32
I.2 Mapping of E-NNI messages 32
Appendix II – Mapping of attributes 33
II.1 Mapping of UNI attributes 33
II.2 Mapping of E-NNI attributes 34
Appendix III – Feedback list TLV 35

Documents
Document Sharing Hub
Copyright International Telecommunication Union/ITU Telcommunication Sector
Provided by IHS Markit under license with ITU-T
No reproduction or networking permitted without license from IHS
Licensee=/, User=,
Not for Resale,
Full document details: ITU-T Y.1704.3 2003

ITU-T Recommendation G.7713.3/Y.1704.3

Distributed Call and Connection Management: Signalling mechanism using GMPLS CR-LDP

1 Scope

This Recommendation provides the signalling mechanism for distributed call and connection management (DCM) using constraint-based routed label distribution protocol (CR-LDP).

ITU-T Recs G.807/Y.1302 and G.8080/Y.1304 together specify the requirements and architecture for a dynamic optical network in which optical service is established using a control plane. ITU-T Rec. G.7713/Y.1704 specifies the detailed requirements for the signalling procedures in the ASON control plane in a protocol-neutral manner.

CR-LDP is a protocol within the Multi-Protocol Label Switching (MPLS) framework and is also recognized as a method of transporting IP over ATM in ITU-T Rec. Y.1310. Extensions to the scope of MPLS to include TDM switching and transport, and optical multiplexing hierarchies are contained in the Generalized MPLS (GMPLS) framework of which there is a protocol neutral functional description. GMPLS CR-LDP referred to in this Recommendation is CR-LDP adapted to the GMPLS framework.

In this Recommendation, the use of the term "GMPLS" refers only to a framework and functional description. The term "GMPLS CR-LDP", or simply "CR-LDP", refers to a specific protocol that was developed within the GMPLS framework. Extensions to GMPLS CR-LDP were developed for the OIF UNI-01.0 specification.

This Recommendation describes the use of the GMPLS CR-LDP protocol as an instantiation of data call and connection management (ITU-T Rec. G.7713/Y.1704) within the ASON (ITU-T Rec. G.8080/Y.1304) framework. It covers the use of CR-LDP for basic call/connection procedures, messages, and signalling over the various reference points. Extensions to GMPLS CR-LDP for compliance to ITU-T Rec. G.7713/Y.1704 are also included in this Recommendation. Routing, DCN usage, and automatic discovery are beyond the scope of this Recommendation.

This Recommendation initially focuses on the support of Soft Permanent Connections (SPC) services. Protocol specifications to support basic switched connections (SC) services are also included.

2 References

The following ITU-T Recommendations and other references contain provisions which, through reference in this text, constitute provisions of this Recommendation. At the time of publication, the editions indicated were valid. All Recommendations and other references are subject to revision; users of this Recommendation are therefore encouraged to investigate the possibility of applying the most recent edition of the Recommendations and other references listed below. A list of the currently valid ITU-T Recommendations is regularly published. The reference to a document within this Recommendation does not give it, as a stand-alone document, the status of a Recommendation.

– ITU-T Recommendation E.360.1 (2002), *Framework for QoS routing and related traffic engineering methods for IP-, ATM-, and TDM-based multiservice networks*.

– ITU-T Recommendation G.703 (2001), *Physical/electrical characteristics of hierarchical digital interfaces*.

– ITU-T Recommendation G.707/Y.1322 (2000), *Network node interface for the Synchronous Digital Hierarchy (SDH)*.

Documents
Document Sharing Hub
Copyright International Telecommunication Union/ITU Telcommunication Sector
Provided by IHS Markit under license with ITU-T
No reproduction or networking permitted without license from IHS
Licensee=/, User=,
Not for Resale,
Full document details: ITU-T Y.1704.3 2003

– ITU-T Recommendation G.709/Y.1331 (2003), *Interfaces for the Optical Transport Network (OTN)*.

– ITU-T Recommendation G.803 (2000), *Architecture of transport networks based on the Synchronous Digital Hierarchy (SDH)*.

– ITU-T Recommendation G.805 (2000), *Generic functional architecture of transport networks*.

– ITU-T Recommendation G.807/Y.1302 (2001), *Requirements for the Automatic Switched Transport Network (ASTN)*.

– ITU-T Recommendation G.872 (2001), *Architecture of optical transport networks*.

– ITU-T Recommendation G.7713/Y.1704 (2001), *Distributed Call and Connection Management (DCM)*.

– ITU-T Recommendation G.7714/Y.1705 (2001), *Generalized automatic discovery techniques*.

– ITU-T Recommendation G.8080/Y.1304 (2001), *Architecture of the Automatically Switched Optical Network (ASON)*.

– ITU-T Recommendation T.50 (1992), *International Reference Alphabet (IRA) (Formerly International Alphabet No. 5 or IA5) – Information technology – 7-bit coded character set for information interchange*.

– ITU-T Recommendation Y.1310 (2000), *Transport of IP over ATM in public networks*.

– IETF RFC 3036 (2001), *LDP specification*.

– IETF RFC 3212 (2002), *Constraint-Based LSP setup using LDP*.

– IETF RFC 3471 (2003), *Generalized Multi-Protocol Label Switching (GMPLS) – Signalling Functional Description*.

– IETF RFC 3472 (2003), *Generalized Multi-Protocol Label Switching (GMPLS) Signalling – Constraint-based Routed Label Distribution Protocol (CR-LDP) Extensions*.

– IETF RFC 3480 (2003), *Signalling Unnumbered Links in CR-LDP (Constraint-Routing Label Distribution Protocol)*.

– IETF RFC 3479 (2003), *Fault tolerance for the Label Distribution Protocol (LDP)*.

– IETF RFC 3478 (2003), *Graceful Restart Mechanism for Label Distribution Protocol*.

– OIF UNI-01.0 (2001), *User Network Interface (UNI) 1.0 signalling specification*.

3 Terms and definitions

The following terms are defined in ITU-T Rec. G.8080/Y.1304:

– connection controller;

– link resource manager;

– subnetwork point;

– protocol controller;

– routing controller;

– subnetwork point pool.

Documents
Document Sharing Hub
Copyright International Telecommunication Union/ITU Telcommunication Sector
Provided by IHS Markit under license with ITU-T
No reproduction or networking permitted without license from IHS
Licensee=/, User=,
Not for Resale,
Full document details: ITU-T Y.1704.3 2003

The following term are defined in ITU-T Rec. G.807/Y.1302:

– Soft permanent connection

This Recommendation defines the following terms:

3.1 **hello**: A message sent by a signalling protocol controller to advertise its presence to other signalling protocol controllers.

3.2 **CR-LDP peers**: Two protocol controllers implementing CR-LDP that have established communication with each other.

3.3 **CR-LDP session**: The control communication instance between two CR-LDP peers.

3.4 **label**: This term is the same as a G.8080/Y.1304 SNP.

3.5 **downstream on demand**: A label advertisement procedure by which the upstream node is responsible for requesting the label mapping.

3.6 **ordered control mode**: A node initiates the transmission of a label mapping only when the label mapping from the downstream node is received.

4 Abbreviations and acronyms

This Recommendation uses the following abbreviations:

ASON	Automatic Switched Optical Network
CR-LDP	Constraint-based Routed Label Distribution Protocol
DCN	Data Communications Network
E-NNI	Exterior NNI
GMPLS	Generalized Multi-Protocol Label Switching
I-NNI	Interior NNI
ISO	International Organization for Standardization
LDP	Label Distribution Protocol
LSP	Label Switched Path
LSR	Label Switch Router
NNI	Network Node Interface
SNP	Subnetwork Point
SNPP	Subnetwork Point Pool
SPC	Soft Permanent Connection
TLV	Type, Length, Value (encoding)
TNA	Transport Network Address

5 Conventions

In this Recommendation, the use of the term "GMPLS" refers only to a framework and functional description. The term "GMPLS CR-LDP", or simply "CR-LDP", refers to a specific protocol that was developed within the GMPLS framework. Extensions to GMPLS CR-LDP were developed for the OIF UNI-01.0 specification.

Documents
Document Sharing Hub
Copyright International Telecommunication Union/ITU Telcommunication Sector
Provided by IHS Markit under license with ITU-T
No reproduction or networking permitted without license from IHS
Full document details: ITU-T Y.1704.3 2003
Licensee=/, User=,
Not for Resale,

6 Assumptions

ITU-T Rec. G.8080/Y.1304 defines a UNI Transport Resource Addresses for the bearer links at the UNI reference point. For this Recommendation, an instantiation of those addresses will follow the OIF Transport Network Address (TNA) from OIF UNI-01.0 which complies with G.8080/Y.1304 architecture. Allowable address formats in the OIF TNA are IPv4, IPv6, and NSAP addresses.

Call routing services are assumed to be available that associate a UNI Transport Resource Addresses with internal routable addresses. This is not within the scope of this Recommendation.

Addressing of transport resources in the protocol is done by SNPP identifiers. A pair of these would identify an SNPP link. SNPP names are defined from transport name spaces (see clause 10/G.8080/Y.1304) and it is important to note that control plane names/addresses are not used for these. For example, neither routing controller nor connection manager identifiers are used for bearer link names.

The terms Quality of Service (QoS), Class of Service (CoS), and Grade of Service (GoS) with respect to the transport plane are used in this Recommendation in the sense of ITU-T Rec. E.360.1. It is expected that ASON specific characteristics and parameters will be associated with these terms in later versions of this Recommendation.

7 Overview and applications

7.1 CR-LDP overview

GMPLS CR-LDP uses attributes defined in RFC 3036 (LDP Specification) and RFC 3212 (Constraint-Based LSP Setup Using LDP). Extensions to CR-LDP signalling required to support generalized MPLS (GMPLS) are contained in RFC 3471 and RFC 3472.

There are four categories of LDP messages as defined in RFC 3036:

- Discovery messages, used to announce and maintain the presence of a network element.
- Session messages, used to establish, maintain, and terminate sessions between CR-LDP peers.
- Advertisement messages, used to create, change, and delete label mappings (or connections).
- Notification messages, used to provide advisory information and to signal error information.

LDP and CR-LDP were developed for use in data networks where the call concept does not exist. Support of connection control could be achieved through the use of the already existing LDP messages. The support of call control requires the introduction of a new message category for this purpose:

- Call control messages, for use in the call control procedure.

Call control messages are a new LDP message category that is introduced specifically for this Recommendation.

Discovery messages provide a mechanism whereby network elements indicate their presence in a network by sending a Hello message periodically. Hello messages are transmitted over UDP to the CR-LDP port. The IP multicast address corresponding to "all routers on this subnet" is used as the destination IP address. When a network element chooses to establish a session with another network element (whose address is learned via the Hello message), it uses the LDP initialization procedure over TCP. Upon successful completion of the initialization procedure, the two network elements become LDP peers and may begin exchanging advertisement messages.

Documents
Document Sharing Hub
Copyright International Telecommunication Union/ITU Telcommunication Sector
Provided by IHS Markit under license with ITU-T
No reproduction or networking permitted without license from IHS
Licensee=/, User=,
Not for Resale,
Full document details: ITU-T Y.1704.3 2003

LDP uses TCP transport for session, advertisement and notification messages, i.e., for everything but the UDP-based discovery mechanism. The use of TCP for transport allows CR-LDP to maintain a hard state property. The term "hard state" means that the representation of the state of an entity persists until an explicit action is taken to change it. TCP also allows CR-LDP to make use of the TCP provided mechanisms for reliable transmission and flow control, hence there is no need to build these important features at the LDP level.

LDP can operate in a number of modes depending on the label distribution mode (*independent* or *ordered*), label retention mode (*conservative* or *liberal*), and label advertisement mode (*downstream on demand* or *downstream unsolicited*). These modes are defined in RFC 3036. The only mode of operation for CR-LDP shall be downstream on demand, ordered control.

CR-LDP supports explicit and loose routing.

In the absence of carrier-grade equipment, i.e., state is lost during failure, CR-LDP employs a graceful restart mechanism by which a failed node reconstructs its state from information learned from the other nodes during the restart.

7.2 Support for basic call identifier

To support the call model described in ITU-T Rec. G.7713/Y.1704, CR-LDP is extended to include call control in addition to a connection. This enables multiple connections to be associated with a single call, changes to existing connections, and call-related billing. The main CR-LDP extension for the support of call control across the UNI and E-NNI is the introduction of the Call Id TLV as defined in 9.4.

7.3 CR-LDP at UNI reference point

CR-LDP is one of two protocol instances specified in OIF UNI-01.0 and serves as an example of CR-LDP at a UNI. CR-LDP UNI extensions allow for the setup, teardown, and query of connections. Connection setup, teardown, and modification utilize specified LDP messages. Connection querying is accomplished using the Query and Query Response messages.

The OIF UNI-01.0 does not include the concept of call and connection separation. So, applying the OIF UNI version of CR-LDP to ITU-T Rec. G.7713/Y.1704 requires additional changes. It does however, contain call information elements that are reused in this Recommendation.

Support of TCP/IP is needed in the DCN for CR-LDP messages. Use of TCP provides signalling channel resilience and this may need to be coordinated with signalling network recovery procedures (if present) as per 6.2/G.7713/Y.1704. Use of TCP for session, advertisement and notification messages fits well with use of the DCN in ITU-T Rec. G.7713/Y.1704 in that signalling channel resilience is not part of the actual CR-LDP protocol but is a separate function.

7.4 CR-LDP at I-NNI reference point

CR-LDP is used across the I-NNI for connection control procedures as specified in ITU-T Recs G.8080/Y.1304 and G.7713/Y.1704. Additional messages, attributes, and procedures are added to support call control at the I-NNI and they need to pass through the I-NNI.

7.5 CR-LDP at E-NNI reference point

CR-LDP is used across the E-NNI for call and connection control procedures as specified in ITU-T Recs G.8080/Y.1304 and G.7713/Y.1704. Additional messages are added to support call control at the E-NNI.

Documents
Document Sharing Hub
Copyright International Telecommunication Union/ITU Telcommunication Sector
Provided by IHS Markit under license with ITU-T
No reproduction or networking permitted without license from IHS
Licensee=/, User=,
Not for Resale,
Full document details: ITU-T Y.1704.3 2003

The E-NNI reference point includes call control. This enables actions to be taken on the connection within a domain bounded by call controllers. For example, a connection failure occurs within a domain and it propagates to a UNI and E-NNI. Those endpoints re-establish a connection without propagating the connection failure beyond the E-NNI. This is a form of re-routing domain.

Different actions result when a call is received on an E-NNI depending on its direction. If the E-NNI receives a call from within the network, it establishes call state and continues the connection across the E-NNI bearer link(s). If the E-NNI receives a call from the other end of the reference point, it continues the connection into the network. In both cases, it maintains the association between the call and its connection(s).

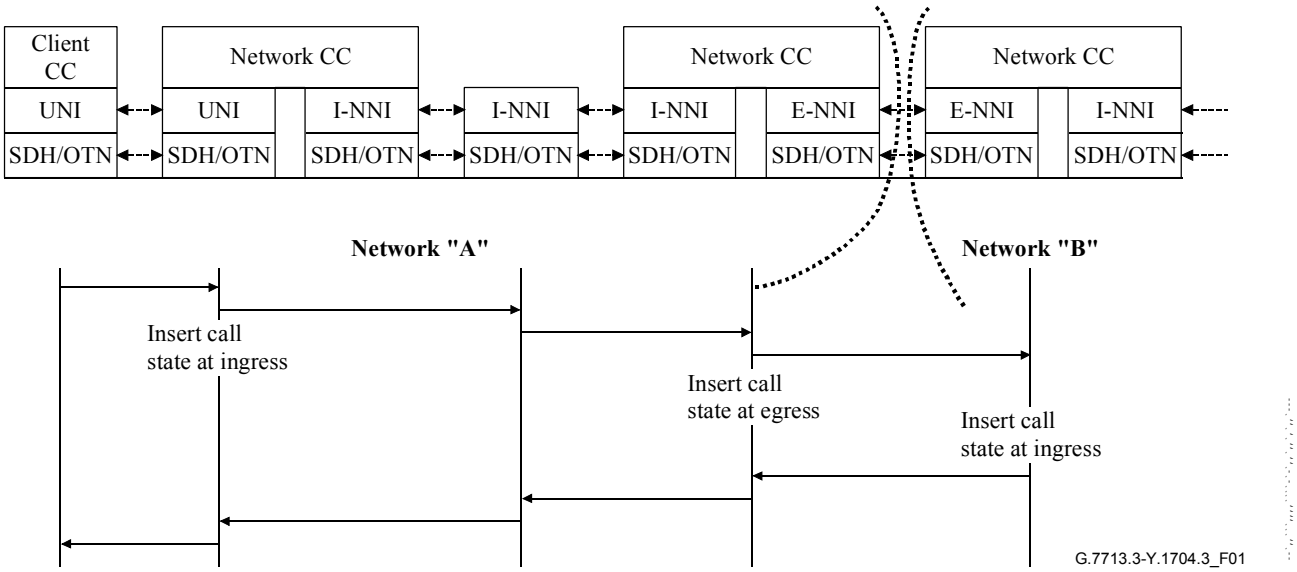

Figure 1/G.7713.3/Y.1704.3 – Progression of signalling

Figure 1 shows the progression of signalling from a client through network A and crossing the network A boundary to network B. Of particular interest in Figure 1 is the insertion of call states at the ingress and egress points of two networks. Call states are inserted before connection setup proceeds.

At the ingress NE of network A, UNI signalling messages are intercepted from a Client Call Controller (CCC) by a Network call control (NCC) which determines if the incoming call/connection can be accepted. Once the call is accepted, call state is inserted at the ingress NE and UNI messages are translated to the equivalent I-NNI signalling messages. I-NNI signalling proceeds across network A until it reaches the egress NE, where a call state is inserted there. Translation of the I-NNI signalling to E-NNI signalling that crosses network A boundary to network B is performed by Network Call Control associated with the E-NNI in Network A.

7.6 CR-LDP support for SPC

An SPC service assumes that both source and destination user-to-network connection segments are provisioned while the network connection segment is set up via the control plane. For example when the initial request is received from an external source (e.g., from management system), there is an implicit assumption that the control plane has adequate information to determine the specific destination (network-to-user) link connection to use. Support for SPC in CR-LDP is provided by making use of the Egress Label as defined in OIF UNI-01.0.

Documents
Document Sharing Hub
Copyright International Telecommunication Union/ITU Telcommunication Sector
Provided by IHS Markit under license with ITU-T
No reproduction or networking permitted without license from IHS
Licensee=/, User=,
Not for Resale,
Full document details: ITU-T Y.1704.3 2003

7.7 Defect handling

There are different types of defects that may affect the control plane. These defects may range from a simple signalling channel failure to multiple control plane node failures. The control plane needs to support appropriate behaviours to recover from these defects, initially attempting to recover from failures based on local control plane mechanisms, local interaction with the transport plane, and subsequently attempting to recover based on control plane interactions with external components.

General guidelines for defect handling include:

– Control plane failures are notified to the management plane. The management plane may direct the control plane to take certain actions due to the failure. These actions may include cleaning up of partial connections, release of certain connections, or other protocol-specific actions for state maintenance and recovery.

– A control plane node may provide a persistent storage of relevant information, such as call and connection state information, configuration information, and control plane neighbour information.

– After repair if connection/call states cannot be recovered, the control plane node may communicate with an external component to attempt state information recovery. External components may include neighbour control plane nodes or a persistent storage provided by a centralised (e.g., management plane) component.

– A control plane node notifies the management plane of the inability to recover (subset of) relevant information (e.g., inability to synchronize state of connections). The management plane may respond with the following actions (the default control plane action should be to retain the connections):

  - Release the impacted connections.
  - Retain the impacted connections. In this case, a connection may remain non-synchronized from the control plane perspective; however, the connection may remain valid.

– A control plane node (after recovering from node failure) may not be able to recover neighbour connection state from its local persistent storage and thus may lose information on connections. In this case the control plane node should request an external controller (e.g., the management system) for information to recover the connections. Similarly call state may be unrecovered and require management intervention to resolve. Specifics of the interactions between the control plane and management plane are beyond the scope of this Recommendation.

Thus, as a general rule:

– A control plane failure must not result in the release of established connections. Setup requests in the process of been completed may be removed (either during the failure or after recovery from failure). Established connections associated with a pending release request must be released (either during the failure or after recovery from failure).

– Additional actions by the control plane may be dependent on provisioned default behaviour for a particular type of connection.

However, a transport plane node failure may result in the release of established connections. This depends on the type of connection and the service level associated with each connection. For example, a "best-effort unprotected" connection may be released during a transport plane node failure while a "protected" connection must be restored (or maintained) based on the service level specification associated with that connection. Note that even in the case of a protected connection, the original connection may be released while a new connection is set up (this also depends on the type of protection used for the particular connection).

Documents
Document Sharing Hub
Copyright International Telecommunication Union/ITU Telcommunication Sector
Provided by IHS Markit under license with ITU-T
No reproduction or networking permitted without license from IHS
Licensee=/, User=,
Not for Resale,
Full document details: ITU-T Y.1704.3 2003

Three types of failures might occur. Those are signalling channel failure, bearer link failure, and nodal (crossconnect) failure. Failure recovery usually involves state recovery and resynchronization with adjacent NEs.

Signalling channel failure disrupts the flow of the control messages between two or more nodes. This failure condition should have no impact on established connections in the sense that those connections should continue in the active state without disruption. Upon recovery connection states must be resynchronized with adjacent NEs. Those connections that were partially established must be terminated.

The failure of the bearer link disrupts the flow of the data. Failure of the data plane needs to be communicated to the control plane for the appropriate action to be taken. Among the possible actions are the termination of connections that are affected by the link failure, re-routing of connections through other links or other nodes. The specific action taken for each connection depends on the protection requirements of a connection.

Nodal failure is similar to link failure. Nodal failure is implicitly communicated to the control plane through the loss of communication with the failed node. In this case the affected connection must be terminated or re-routed through other nodes.

8 GMPLS CR-LDP messages

All CR-LDP messages have a common structure that uses a Type-Length-Value (TLV) encoding scheme as illustrated in Figure 2. The number of bits allocated for each field is as shown. The Value part of a TLV-encoded object, or TLV for short, may itself contain one or more TLVs. The Length field specifies the length of the Value field in octets. The meaning of U and F bits is defined in RFC 3036.

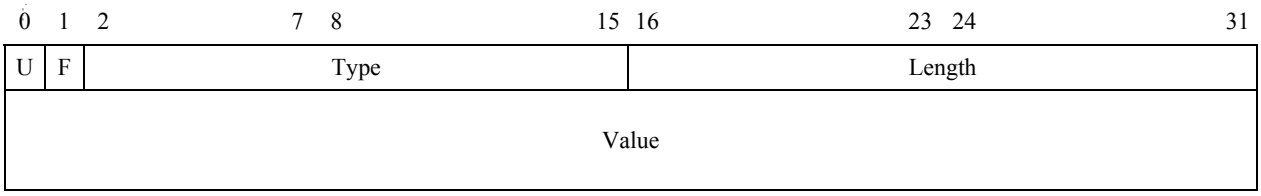

Figure 2/G.7713.3/Y.1704.3 – Structure of a TLV encoding scheme

Table 1 gives a summary the set of messages defined for CR-LDP along with their scope, function and source reference.

Table 1/G.7713.3/Y.1704.3 – Messages defined for CR-LDP

Message	Scope	Ref. point	Function	Source
Label Request	End-to-End	All	Sent by the calling party requesting the setup of a connection with certain attributes	RFC 3036
Label Mapping	End-to-End	All	Sent by the called party indicating the setup of a connection with the attributes given in Label Request message.	RFC 3036
Initialization	Local	All	For establishing LDP peers between network elements	RFC 3036

Documents
Document Sharing Hub
Copyright International Telecommunication Union/ITU Telcommunication Sector
Provided by IHS Markit under license with ITU-T
No reproduction or networking permitted without license from IHS
Licensee=/, User=,
Not for Resale,
Full document details: ITU-T Y.1704.3 2003