Interior Fittings for Passenger Cars

1. Scope

This standard applies to the treatment of protrusions inside passenger cars. It does not, however, apply to controlling devices that directly affect the operation of the vehicle, nor to window glass or interior rear-view mirrors.

Remark: Units used within this standard are SI-defined units, and units indicated within brackets "{ }" are traditional units included for reference purposes.

2. Objectives

This standard is intended to stipulate the evaluation methods and performance requirements for protrusions inside passenger cars, in order to prevent injuries when occupants come into contact with interior parts, and also to ensure safety and minimize injuries in the event of a frontal collision.

3. Definitions

The definitions of the main terms used in this standard are listed below.

(1) **Vehicle interior:** The space enclosing occupants when seated with doors, windows, and sunroof closed.

(2) **Instrument panel datum line:** The line formed across the width of the vehicle by a Y plane marking the furthest extension of the instrument panel toward the rear.

(3) **Point R, JIS D 4606-1983:** From a seated reference point (applicable to vehicle occupant head restraints).

(4) **Torso reference line:** The unique line passing through the specified point R defining the inclination of the occupant's torso.

(5) **Ceiling:** The section of the vehicle interior above the imaginary boundary line above the windshield top edge, rear window top edge, door opening top edges, and side window top edges.

(6) **Listing wire:** The wire used within the ceiling panel.

(7) **Sunroof:** A roof with a structure that may be folded back, removed, or slid open. This does not include the roofs of convertible cars that can be fully opened.

(8) **Auxiliary seat:** A seat used in special circumstances; normally folded to avoid obstruction.

(9) **Head models:** Models in the shape of human heads used for the following purposes.

(a) Investigating whether an occupant's head comes into contact with protrusions in the vehicle interior

(b) Measuring the size of protrusions

(c) Evaluating safety when an occupant's head impacts parts of the vehicle interior

(10) **Knee model:** A measurement standard used for investigating whether an occupant's knee comes into contact with other parts.

(11) **Zone A:** The instrument panel head impact area above the instrument panel datum line. (See **Figure 1**.)

(12) **Zone B:** The section of the instrument panel below the instrument panel datum line. (See **Figure 1**.)

(13) **Zone C:** The section of the plane perpendicular to the Y plane. The section is in front of the plane that includes the torso reference line of a three-dimensional mannequin positioned in one of the forward-facing rear seats. And the section is above the Z plane that passes through point R on relevant front and rear seats. The driver's seat is used to determine point R for all the front seats, and the outside rear seats are used to determine point R for all the rear

Documents
Document Sharing Hub
Full document details: JASO B003 1989

seats. The boundaries of the zone C are formed by the X plane that passes through all points R if the Z planes passing through the front and rear seats do not coincide. (See Figure 1.)

Quoted standards:

JIS D 0030 Three-dimensional reference system for automobiles

JIS D 0301 Measuring methods for automobile body interior dimensions

JIS D 4606 Head restraints for automobile occupants

Corresponding international standards:

ISO 3208 Road vehicles—Evaluation of protrusions inside passenger cars

Documents
Document Sharing Hub

Full document details: JASO B003 1989

(14) Zone D: The ceiling (including sunroofs) in front of the plane perpendicular to the Y plane that includes the torso reference line of a three-dimensional mannequin positioned in one of the forward-facing rear seats. (See **Figure 1**.)

(15) Zone E: The seat backs and rear surfaces of the head restraints. (See **Figure 1.**)

Figure 1: Five zones

(1) Zones, A, B, D, and E

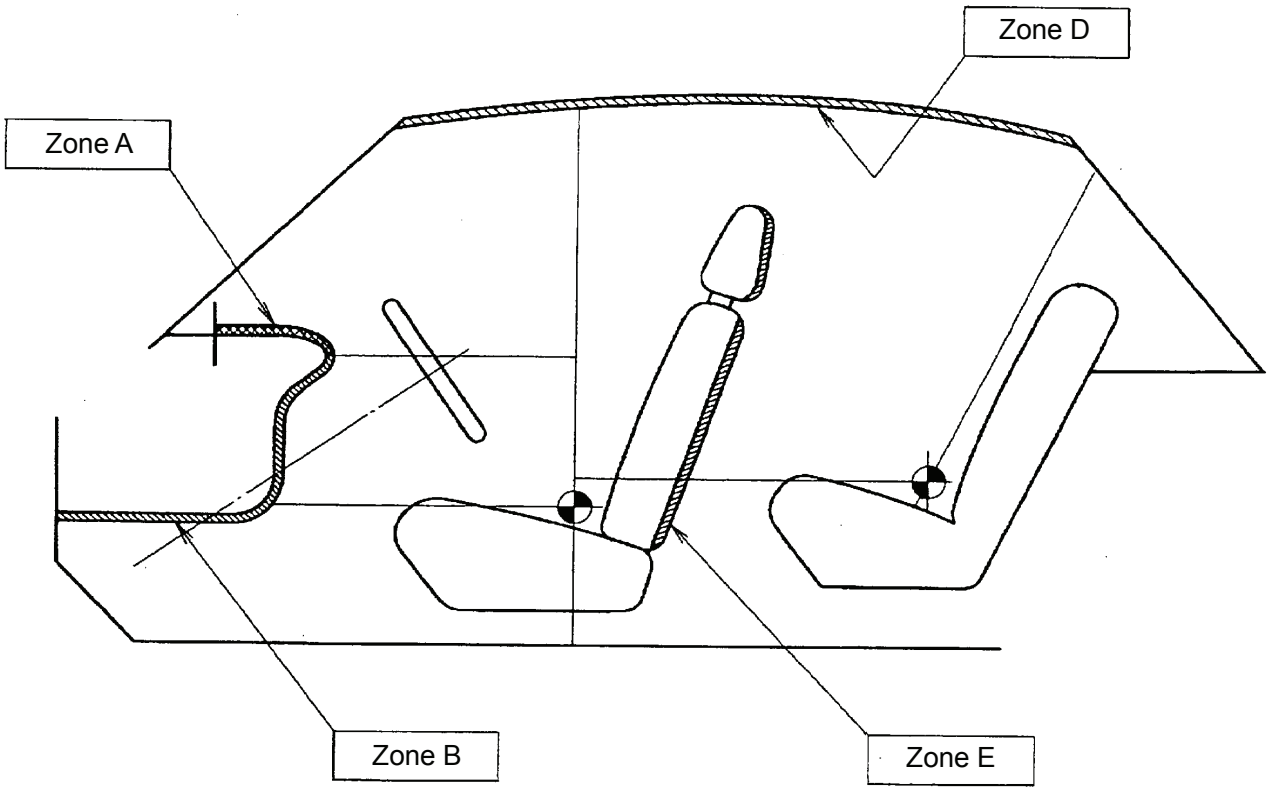

(2) Zone C

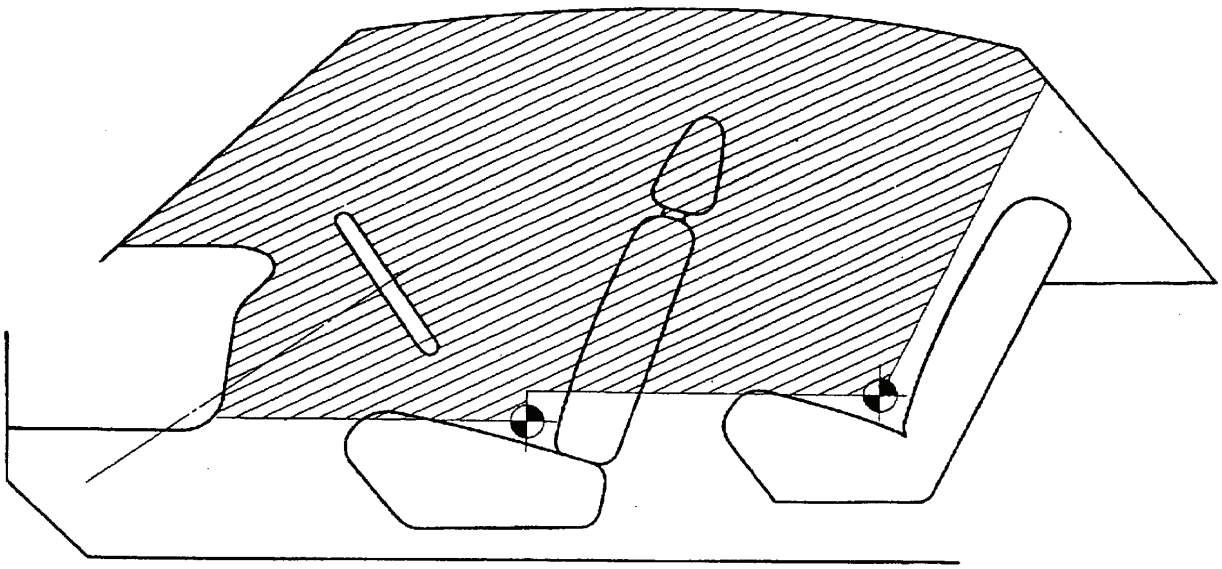

Documents
Document Sharing Hub
Full document details: JASO B003 1989

4. Performance requirements

The performance requirements are as detailed in sections **4.1** to **4.5**. The performance requirements described in **(1)** and **(2)** below apply to all sections.

(1) Corners should be rounded provided the protrusion does not exceed 3.2 mm.

(2) Joints between metal panels, cutouts, or similar sections, and the areas around holes protruding no more than 3.2 mm do not have to feature rounded corners if static contact is made with the head and knee models, provided that the sections are free of dangerous burrs. Mold parting lines on plastic components are treated in the same way.

4.1 Zone A

The performance requirements for zone **A** are as follows.

4.1.1 Energy absorption requirements

The deceleration of the head model during the test described in **6.3** must not exceed 784.5 m/s^2 {80 G} continuously for more than 3/1,000 sec.

No dangerous sharp edges (hereinafter simply "sharp edges") likely to worsen injuries to the occupants must be formed at the point of impact.

4.1.2 Switches, knobs, and levers

Switches, knobs, and levers must comply with the following when measured as described in **6.5**.

In the case of items covered with soft material that make localized contact with a model and that feature a Shore A hardness of less than 50, the amount of protrusion, radius of curvature of the angled section, and cross-sectional area are to be measured with the soft material removed.

(1) Either one of the following is to be satisfied if the protrusion is between 3.2 mm and 15.0 mm.

- **(a)** The cross-sectional area calculated in **6.7** is to be at least 2.0 cm^2 at a position within 2.5 mm from the maximum point of protrusion. Corners shall be rounded.
- **(b)** The radius of curvature for the corner measured in **6.6** is to be at least 2.5 mm.

(2) If the protrusion exceeds 15.0 mm, the protrusion must recede to not exceed 15.0 mm following the loading test described in **6.8** or else must break off without forming sharp edges. Either one of the following must also be satisfied.

- **(a)** The cross-sectional area calculated in **6.7** is to be at least 2.0 cm^2 at a position within 2.5 mm from the maximum point of protrusion. Corners shall be rounded.
- **(b)** The radius of curvature for the corner measured in **6.6** is to be at least 2.2 mm.

4.1.3 Grills

Grills should have rounded corners.

4.1.4 Other components (components other than switches, knobs, levers, and grills)

For other components, the radius of curvature for the corner measured in **6.6** is to be at least 2.5 mm if the protrusion measured in **6.5** is 3.2 mm or more.

Components must not feature a dangerous structure likely to worsen injuries to occupants.

4.2 Zone B

Zone B performance requirements apply to those uncovered shelves, storage compartments, switches, knobs, and levers with which the knee model makes static contact in **6.4**.

In the case of items covered with soft material that make localized contact with a model and that feature a Shore A hardness of less than 50, the amount of protrusion, radius of curvature of the angled section, and cross-sectional area

Documents
Document Sharing Hub
Full document details: JASO B003 1989

are to be measured with the soft material removed.

4.2.1 Switches, knobs, and levers

Switches, knobs, and levers must comply with **4.1.2.** However, switches, knobs, and levers attached to the steering column shall comply with one of the following.

(1) The radius of curvature for the corner measured in **6.6** is to be at least 2.5 mm.

(2) The cross-sectional area calculated in **6.7** is to be at least 2.0 cm^2 at a position within 2.5 mm from the maximum point of protrusion.

4.2.2 Uncovered shelves and compartments

For uncovered shelves and storage compartments, the radius of curvature for the corner measured in **6.6** is to be at least 2.5 mm.

Either one of the following must also be satisfied.

(1) There is to be visible deformation and displacement following the loading test described in **6.8**. Items with openings facing upward and items that cannot be tested due to the loading structure are exempt.

(2) The deceleration of the head model during the test described in **6.3** must not exceed 784.5 m/s^2 {80 G} continuously for more than 3/1,000 sec.

No dangerous sharp edges must be formed at the point of impact.

4.3 Zone C

With the exception of **(1)** to **(3)** below, the performance requirements for zone C apply to components with which static contact is made by the head model.

(1) Components covered in **4.1, 4.2, 4.4,** and **4.5.**

(2) Components in the gap between the front partition and the instrument panel that are above the lower edge of the instrument panel.

(3) The area excluded in **6.2.**

Storage compartments are to have their lids closed, seatbelts are to be in the normal fastened position, and components with defined stowage positions are to be fully stowed.

In the case of items covered with soft material that make localized contact with a model and that feature a Shore A hardness of less than 50, the amount of protrusion, radius of curvature of the angled section, and cross-sectional area are to be measured with the soft material removed.

4.3.1 Switches, knobs, and levers

Switches, knobs, and levers must comply with the following. Only **(1)** needs be satisfied if the head model does not come into contact with the load face of the switch, knob, or lever.

(1) The radius of curvature for the corner measured in **6.6** is to be at least 2.5 mm if the protrusion measured in **6.5** is 3.2 mm or greater.

(2) Following the test described in **6.8,** the protrusion measured in **6.5** is to recede to no more than 35 mm, or the component is to break off or bend. Sharp edges must not remain after the component has broken off.

Window opening/closing handles may protrude up to 45 mm.

4.3.2 Components attached to the ceiling that are not ceiling structure components (e.g., grips, interior lamps, sun visors, and sunroof operating motors)

Components not forming ceiling structure components must satisfy the following if the protrusion measured in **6.5** is 3.2 mm or greater.

(1) Either **(a)** or **(b)** must be satisfied if the components are situated within the head impact area.

Documents
Document Sharing Hub

Full document details: JASO B003 1989

Sun visor frames must satisfy either **(b)** or **(c).**

(a) The radius of curvature for the corner measured in **6.6** is to be at least 3.2 mm. The part must not feature a structure likely to worsen injuries to occupants.

(b) The deceleration of the head model during the test described in **6.3** must not exceed 784.5 m/s^2 {80 G} continuously for more than 3/1,000 sec.

No dangerous sharp edges must be formed at the point of impact.

(c) The diameter must not exceed 5.0 mm.

(2) If outside the head impact area, the radius of curvature for the corner measured in **6.6** is to be at least 3.2 mm.

Sun visor frames are exempt from performance requirements.

4.3.3 Grills

Grills should have rounded corners.

4.3.4 Other components (components other than switches, knobs, levers, components not forming part of the ceiling structure, and grills)

For other components, the radius of curvature for the corner measured in **6.6** is to be at least 3.2 mm if the protrusion measured in **6.5** is 3.2 mm or more.

Components must not feature a dangerous structure likely to worsen injuries to occupants.

4.4 Zone D

The performance requirements for zone D apply to the components with which static contact is made by the head model. In the case of items covered with soft material that make localized contact with a model and that feature a Shore A hardness of less than 50, the amount of protrusion and radius of curvature of the angled section are to be measured with the soft material removed.

4.4.1 Ribs and stiffeners

Ribs and stiffeners are to satisfy the following if the protrusion measured in **6.5** is 3.2 mm or more.

(1) Either **(a)** or **(b)** must be satisfied if the components are situated within the head impact area.

(a) The protrusion must not exceed 19.0 mm, and the radius of curvature for the corner measured in **6.6** is to be at least 5.0 mm. Components must not feature a dangerous structure likely to worsen injuries to occupants. Header rails, roof side rails, and door frames need satisfy only the radius of curvature for corners.

(b) **4.3.2 (1) (b)** must be satisfied.

(2) For components situated outside the head impact area, the radius of curvature for the corner measured in **6.6** is to be at least 5.0 mm.

4.4.2 Listing wire

Listing wire inside the head impact area is to satisfy either **(1)** or **(2)**.

(1) The diameter must not exceed 5.0 mm.

(2) **4.3.2 (1) (b)** must be satisfied.

4.4.3 Sunroof manual operating mechanism

The sunroof manual operating mechanism must satisfy the following with the sunroof closed and the mechanism in the stowed position.

AVA Documents
Document Sharing Hub

Full document details: JASO B003 1989

(1) The radius of curvature for the corner measured in **6.6** is to be at least 5.0 mm if the protrusion measured in **6.5** is 3.2 mm or more.

(2) Following the test described in **6.8,** the protrusion measured in **6.5** must not exceed 35.0 mm. Sharp edges must not remain if the component breaks off.

4.4.4 Other components (components other than ribs, stiffeners, listing wire, and sunroof manual operating mechanism)

For other components, the radius of curvature for the corner measured in **6.6** is to be at least 5.0 mm if the protrusion measured in **6.5** is 3.2 mm or more. Components must not feature a dangerous structure likely to worsen injuries to occupants.

4.5 Zone E[(1)]

The performance requirements for zone E are as follows.

Note[(1)]: Excluding front-facing rearmost seats, side-facing seats, rear-facing seats, back-to-back seats, and auxiliary seats.

4.5.1 Components that make static contact with the head model

Components that make static contact with the head model must not feature dangerous roughness or sharp edges.

4.5.2 Components within the head impact area

The head impact area is as indicated in **Figure 2**. The performance requirements for components within this head impact area are to be as stipulated in **(1)** and **(2).** In the case of items covered with soft material that make localized contact with a model and that feature a Shore A hardness of less than 50, the amount of protrusion and radius of curvature of the angled section are to be measured with the soft material removed.

Figure 2: Head impact area

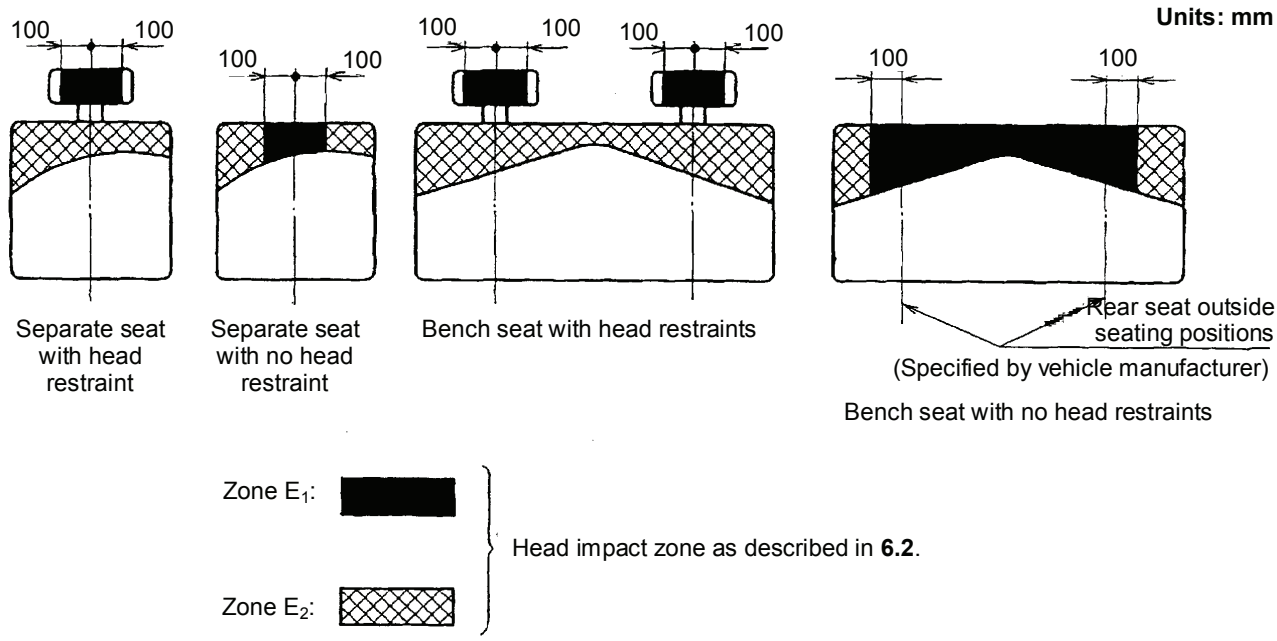

(1) **Zone E_1:** With adjustable head restraints at their lowest and furthest forward positions, the deceleration of the head model during the test described in **6.3** or **JIS D 4606-1983 5.1.3 (2)** must not exceed 784.5 m/s^2 {80 G} continuously for more than 3/1,000 sec. No dangerous sharp edges must be formed at the point of impact.

(2) **Zone E_2: (1)** or either **(a)** or **(b)** below must be satisfied.

Documents
Document Sharing Hub
Full document details: JASO B003 1989

(a) Must be padded to prevent direct contact between the head model and the seat frame.

(b) For the seat frame, the radius of curvature for the corner measured in **6.6** is to be at least 5.0 mm if the protrusion measured in **6.5** is 3.2 mm or more.

5. Test conditions

The measurement conditions for tests are to be as follows.

(1) The installation conditions for test vehicles and test components are to be as stipulated in **3.1** of **JIS D 0301** (Measuring methods for automobile body interior dimensions), with the exception of those stipulated in **(2)** below. The three-dimensional coordinates used in this standard are as stipulated in **JIS D 0030** (Three-dimensional reference system for automobiles) and **JIS D 0301**.

(2) In cases in which impact and load testing are not possible in the actual vehicle, test components are to be tested mounted on a rig featuring stiffness equivalent to that of the actual vehicle. The positional relationship between the test device and the test component is to comply with the test conditions described in **6**.

(3) The ambient temperature of the location in which the test vehicle or test components are installed is to be 20°C ±10°C.

(4) All windows are to be closed.

6. Test methods

6.1 Measuring the instrument panel datum line

6.1.1 Measuring apparatus

A plumb bob is to be used as the measuring apparatus. (See **Figure 3**.)

Figure 3: Plumb bob

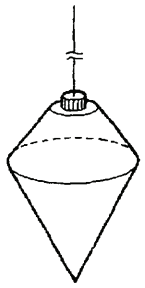

6.1.2 Measurement

(1) Move the plumb line (L) in the axial direction from the rear of the vehicle toward the front, and mark the point first touched on the instrument panel surface. (See **Figure 4**.) This procedure should be repeated across the entire width of the instrument panel. (See **Figure 5**.)

(2) The lower boundary is the intersection between the instrument panel and the Z plane at a height 25.4 mm above point R. (See **Figure 4 Example 2**.)

(3) If there are two or more contact points, the lowest point is to be used. (See **Figure 4 Example 3**.)

Note that switches, knobs, levers, the ashtray in the extended position, and consoles are ignored when measuring the instrument panel datum line. Consoles that are structurally connected to the instrument panel are treated as part of the instrument panel.

Documents
Document Sharing Hub
Full document details: JASO B003 1989

Figure 4: Instrument panel datum line measurement

(Example 1)

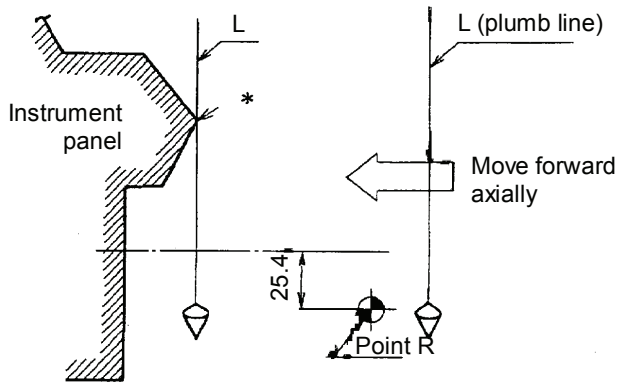

(Example 2)

Units: mm

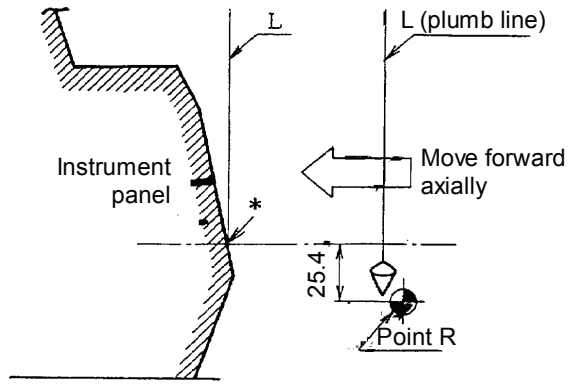

(Example 3)

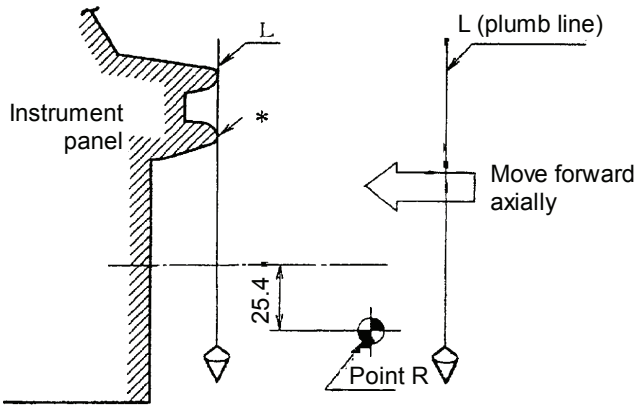

* Indicates the point on the instrument panel datum line.

Documents
Document Sharing Hub
Full document details: JASO B003 1989

Figure 5: Typical measurement marking for the instrument panel datum line

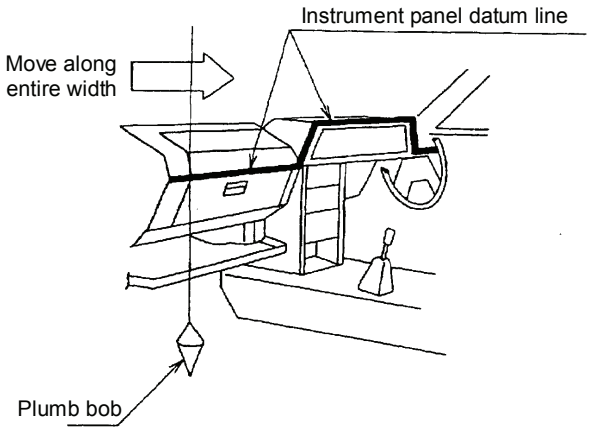

6.2 Measuring the head impact area

The head impact area is the area calculated by subtracting the area obtained in **6.2.4** (or obtained in another manner under the same conditions using figure drawing) from the area obtained in **6.2.3**, of the entire vehicle interior surface, excluding glass surfaces.

6.2.1 Measuring apparatus

An apparatus with a 165-mm diameter head model allowing adjustment of the distance between the center of rotation to the top of the head by between 736 mm and 840 mm. (See **Figure 6**.)

Figure 6: Head impact area measuring apparatus

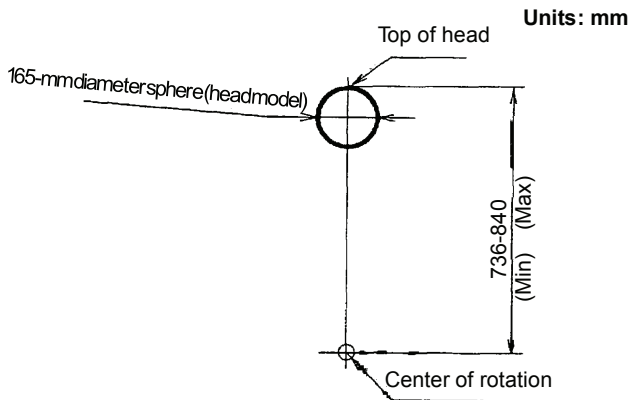

6.2.2 Measurement conditions

(1) Determining center of rotation

(a) The following two points are to be used as the center (axis) of rotation for seats that can be adjusted backward and forward.

(i) Point R

(ii) The point 127 mm horizontally forward of point R (or maximum adjustment distance if this is 127 mm or less) and situated 19 mm upward relative to point R or the actual vertical displacement in the forward motion of the seat.

(b) Point R for seats that cannot be adjusted backward and forward.

(c) The position in the lateral direction is to be the center position of the seated individual or the corresponding design center position.

Documents
Document Sharing Hub
Full document details: JASO B003 1989