Road vehicles – Service brake – Vehicle simulated mountain brake fade test procedure

1. Scope

This standard specifies the test procedures for simulating a mountain-down-slope travel on a level road surface (a test course) involving service brakes that properly operate in vehicles, always excepting combination vehicles and motorcycles.

2. Normative reference

The following standards, when referred to in this standard, constitute a part of the specifications of this standard. As required, the most recently updated version of the applicable standards (including addenda) shall be applied.

JIS D0210 General rules of brake test method of automobiles and motor cycles

JASO C402 Passenger car – Service brake road test procedure

JASO C404 Truck and bus – Service brake road test procedure

3. Definitions

Definitions of main terms used in this standard shall be based on **JIS D0210** and as follows.

3.1 Duration of mountain fade test

Time elapsed between the starting of braking operation in the first mountain fade test and the starting of braking operation in the last mountain fade test.

3.2 Pre-braking brake temperature

Brake temperature read off within 15 seconds before starting to brake. Pre-braking brake temperature shall be a higher value among average pre-braking brake temperature by axles calculated based on those of individual wheels.

3.3 Braking operation

An operation to keep braking deceleration nearly constant by adjusting pedal pressure.

3.4 Wheel lock

The condition where wheels completely stop spinning while a vehicle is traveling, except an instantaneous wheel lock seen in a vehicle equipped with the ABS.

3.5 Soak test

A test to check temperature of individual parts and brake pedal characteristics when the brake is at high temperature with the vehicle is in the stopped state.

AVA Documents
Document Sharing Hub

Full document details: JASO C438 2008

4. Vehicle category

Vehicles shall be divided into categories by nominal maximum velocity, riding capacity and gross vehicle mass, as shown in **Table 1**.

Table 1 – Vehicle category

Group	Category	Nominal maximum velocity and gross vehicle mass (GVM)
Passenger car	P1	Over 140 km/h
	P2	140km/h or lower and over 110 km/h
	P3	110 km/h or lower and over 90 km/h
	P4	90 km/h or lower
Type-1 bus	M2	Buses with a riding capacity of 10 persons or more and GVM of 5 tons or less
Type-2 bus	M3	Buses with a riding capacity of 10 persons or more and GVM of over 5 tons
Type-1 truck	N1-A	Trucks with GVM of 2.5 tons or less and over 130 km/h
	N1-B	Trucks with GVM of 2.5 tons or less and not over 130 km/h Trucks with GVM of 3.5 tons or less and over 2.5 tons
Type-2 truck	N2	Trucks with GVM of 12 tons or less and over 3.5 tons
Type-3 truck	N3	Trucks with GVM of over 12 tons

5. Test condition

5.1 Vehicle condition

Conditions of a vehicle at the test shall be based on **4.1** (Vehicle condition) in **JIS D0210**, and it shall be with the maximum load through the test.

5.2 Condition of individual part of brake system

Conditions of individual parts of the brake system at the test shall be based on **4.3** (Condition of individual part of brake system) in **JIS D0210**.

5.3 Road surface and weather conditions

Conditions of road surface and weather where the test is conducted shall be as follows.

a) Test road surface: Road surface where a vehicle stops for the effectiveness check, the mountain fade test, the recovery test and the soak test shall be concrete road composed of dried portland cement or a sufficiently flat and stiff pavement surface with the equivalent friction coefficient. Road slope which a vehicle stops on in the effectiveness check shall be +/- 1 % or less.

b) Ambient temperature: Ambient temperature, when the test is conducted, shall be in the range where it does not significantly affect functions. Ambient temperature, when the mountain fade test and the recovery test are conducted, shall be preferably 4 °C or more and 35 °C or less.

c) Wind velocity: Wind velocity, when the test is conducted, shall be in the range where it does not significantly affect functions, and 5 m/s or less is generally advisable.

5.4 Temperature measuring method: Temperature measuring method in the test is as described below.

a) Measurement of brake temperature shall be based on **Section 1** of **6.** (Temperature measuring method) in **JIS D0210**.

b) Thermocouples for measuring brake fluid temperature shall be fitted to each brake. (Refer to **Annex A.**)

Documents
Document Sharing Hub

Full document details: JASO C438 2008

6. Test procedure

6.1 Braking operation

Braking operation in this test shall be as described below.

a) Braking operation for vehicles in the categories of P1, P2, P3 and P4 shall be applied with pedal pressure of below 500N until the vehicle completely stops. 500N braking operation shall be applied if the designated deceleration can not be reached even with the pedal pressure of 500N. For vehicles in the categories of M2, M3, N1-A, N1-B, N2 and N3, braking operation shall be applied with pedal pressure of below 700N until the vehicle completely stops. 700N force braking operation shall be applied if the designated deceleration can not be reached even with the pedal pressure of 700N.

b) For vehicles in the categories of P1, P2, P3, P4, N1-A and N1-B, braking operation shall start at the center of a straight lane of 3.5 meters in width and continue with a vehicle position maintained or controlled so a part of the vehicle does not run off the lane. For vehicles in the categories of M2, M3, N2 and N3, braking operation shall start at the center of a straight lane of 3.7 meters in width and continue with a vehicle position maintained or controlled so a part of the vehicle does not run off the lane, except the width of the straight lane shall be 1.2 meters longer than the total vehicle width, instead of 3.7 meters, if the total vehicle width is over 2.5 meters.

c) The retarder and auxiliary brakes may be used together in case braking operation is applied with the gearshift position set to the normal drive position.

6.2 Test item and test sequence

Test items and sequence shall be as follows.

a) Bedding

Bedding for vehicles in the categories of P1, P2, P3 and P4 shall be based on **c)** (Bedding) of **5.2** (Test item and test sequence) in **JASO C402**. For vehicles in the categories of M2, M3, N1-A, N1-B, N2 and N3, it shall be based on **c)** (Bedding) of **5.2** (Test item and test sequence) in **JASO C404**.

b) Effectiveness check No.1

Gearshift position when driving	Neutral position
Pre-braking brake temperature	80 °C
Initial speed of braking	50, 80 km/h for vehicles in P1, P2, P3 and N1-A
	50 km/h for vehicles in P4, M2, M3, N1-B, N2 and N3
Braking operation	4.5 m/s^2 constant for vehicles in P1, P2, P3 and N1-A
	3.0 m/s^2 constant for vehicles in P4, M2, M3, N1-B, N2 and N3
Frequency of braking	3 times under the condition of individual initial speed of braking
Record	Pedal pressure, Brake fluid temperature, Pre-braking brake temperature

Documents
Document Sharing Hub
Full document details: JASO C438 2008

c) Mountain fade test No.1

Initial speed of braking	50 km/h
Gearshift position when driving	Neutral position
Pre-braking brake temperature	60 °C only at the first time
Braking operation	Constant braking deceleration of 3.0 m/s^2
Cooling run speed	Same speed as the initial speed of braking
Accelerate condition	Accelerate at full throttle immediately after the stop
Interval of braking	20 seconds for vehicles in P1 and P2 30 seconds for vehicles in P3 and N1-A 40 seconds for vehicles in M2, M3, N1-B, N2 and N3 60 seconds for vehicles in P4
Frequency of braking	60 times
Record	Pedal pressure, Brake fluid temperature, Pre-braking brake temperature, Duration of mountain fade test

d) Effectiveness (hot) test No.2

The procedures of the Effectiveness check No.1 shall be repeated immediately after the mountain fade test No.1 described in **c)**, although the interval of braking shall be replaced as follows and pre-braking brake temperature shall not be specified.

Interval of braking	Same interval as the one in the mountain fade test No.1 for a test with the initial speed of braking of 50 km/h 60 seconds for a test with the initial speed of braking of 80 km/h
Cooling run speed	Same speed as the initial speed of braking

Remark: Drive the vehicle at the initial speed of the recovery test immediately after the effectiveness test No.2. Then, apply first braking operation as a part of the recovery test in 120 seconds on vehicles in the categories of P1, P2, P3 and N1-A or in 180 seconds on vehicles in the categories of P4, M2, M3, N1-B, N2 and N3.

e) Recovery test

Initial speed of braking	50 km/h
Gearshift position when braking	Normal drive position
Braking operation	Constant braking deceleration of 3.0 m/s^2
Cooling speed	50 km/h
Accelerate condition	Accelerate ordinarily
Interval of braking	120 seconds for vehicles in P1, P2, P3 and N1-A 180 seconds for vehicles in P4, M2, M3, N1-B, N2 and N3
Frequency of braking	10 times
Record	Pedal pressure, Brake fluid temperature, Pre-braking brake temperature

f) Mountain fade test No.2

Repeat the mountain fade test No.1 described in **c)**.

Documents
Document Sharing Hub

Full document details: JASO C438 2008

g) Soak test

Run idle after the last stopping in the mountain fade test No.2 described in **f)** and let the vehicle stay with the parking brake applied. In the meantime, apply the pedal pressure equivalent to the one having applied in the effectiveness check No.1 to get the designated braking deceleration (the value of pedal pressure found at the initial speed of braking of 50 km/h), for about 5 seconds 15 times at intervals of 60 seconds for recording.

Record	Brake fluid temperature, Friction material temperature, Conditions of brake pedal.

h) Effectiveness check No.3

Repeat **b)** immediately after the soak test, except that pre-braking brake temperature shall not be specified.

i) Re-bedding

Repeat **a)**, except that the frequency of braking shall be 35 times.

j) Effectiveness check No.4

Repeat **b)**.

k) Final check

Disassemble all brakes, inspect them and record any concerned findings.

6.3 Allowable limit for change in test condition

Allowable limits for changes in the test conditions are as follows.

a) The test may start if the reading on a calibrated meter is within the following range with respect to a specified condition for each item.

1) The range from -3 to +3 km/h of the specified value for initial speed of braking.

In addition, in the case a vehicle is in the category of P4 or in the categories of M2, M4, N1-B, N2 and N3 that is 80 km/h or below, compare its specified initial speed of braking with 80 % of its nominal maximum velocity. If the 80 % of the nominal maximum velocity is lower, take the speed that is integral multiple of 5 (km/h) and lower than and closest to the 80 % of the nominal maximum velocity, and regard this speed as the initial speed of braking. In this case, it is required to record that the condition of initial speed of braking has been relaxed.

2) The range from -10 to +10 °C of the specified value for pre-braking brake temperature.

In addition, in the case of vehicles in the categories of P3, P4, M2, M3, N1-B, N2 and N3 or vehicles with special structures, especially if temperature of the brake is difficult to rise, pre-braking brake temperature originally set to 80 or 120 °C may be changed to 60 or 80 °C individually to start the tests. In this case, it is required to record that the condition of pre-braking brake temperature has been relaxed.

AVA Documents
Document Sharing Hub

Full document details: JASO C438 2008

b) The following items shall have target ranges as follows. The readings on calibrated meters shall be as close to the target ranges as possible in testing.

1) For braking deceleration, the range from 0 to +0.5 m/s^2 with respect to the specified braking deceleration.

2) For cooling speed, the range from -3 to +3 km/h with respect to the specified cooling speed.

In addition, in the case of a vehicle in the category of P4, trucks and buses, compare its specified cooling speed with 80 % of its nominal maximum velocity. If the 80 % of nominal maximum velocity is lower, take the speed that is integral multiple of 5 (km/h) and lower than and closest to the 80 % of the nominal maximum velocity, and regard this speed as the cooling speed. In this case, it is required to record that the condition of cooling speed has been relaxed.

c) If a vehicle can not reach the designated speed because of its insufficient accelerating ability, an interval of braking may be changed to 1.5 times of the specified interval in the mountain fade test. In this case, it is required to record that the condition of interval of braking in the mountain fade test has been relaxed. Also, an interval of braking may be changed within the range from -15 to +15% of the specified interval only at certain rounds if the specified interval of braking can not be followed because of a round test course.

An allowable limit for duration of mountain fade test shall be within -15 to +15 %.

d) In the mountain fade test Nos.1 and 2, if a vehicle is equipped with auxiliary brakes including the retarder, mass of a load carried by the test vehicle may be lightened in testing in consideration of braking deceleration due to the usage of the auxiliary brake. In this case, it is required to record that the condition of mass of a load in the mountain fade test has been relaxed.

6.4 Braking operation other than as a part of testing

Braking operation other than as a part of testing must be avoided as far as possible. However, brake shall be applied in accordance with the conditions of initial speed of braking and braking deceleration specified as Bedding if the brake needs to be overheated to a specified temperature.

7. Record

7.1 Instruction for recording

Followings are instructions for recording.

a) Pay heed to every phenomenon of abnormal brake function, noise and vibration throughout the entire test and record it if any.

b) Throughout the entire test, record a wheel position and situation where a wheel lock occurred if any.

In addition, record when the ABS activated.

c) Throughout the entire test, record if a vehicle shows such uncontrollable behavior as it runs off the width of lane specified in **6.1.b)**.

d) As for measurements of pedal pressure and braking deceleration, record initial values and intermediate values (when ongoing).

Except for those values, record a maximum value as well if there is one. In this case, read the maximum value when the speed of a vehicle is not 10 km/h or less in order to circumvent the effect of build-up that occurs immediately before the stop. Also, it is allowable to cut down on measurement reading if it is difficult to read the three measurements mentioned above due to a measuring method.

AVA Documents
Document Sharing Hub

Full document details: JASO C438 2008

e) Pedal pressure and Deceleration shown in **Table B.2** and **B.3** in **Annex B** shall refer to average pedal pressure and average braking deceleration

f) In case the designated braking deceleration can not be achieved in the test where braking deceleration is to be constant, record a value of braking deceleration as well as a value of pedal pressure when the average braking deceleration is not within the range from -15 to +15 % of the specified deceleration. In the bedding test, however, record them when the average braking deceleration is not within the range from -30 to +30 % of the specified deceleration.

g) Fluid pressure and air pressure may be recorded instead of measuring and recording pedal pressure.

h) The order in which wheels are read their pre-braking brake temperature shall be the same throughout the entire test.

7.2 Form of record

Forms of record are as follows.

a) Summary of test result (**Table B.2** in **Annex B**)

b) Graphic summary of test result (**Table B.3** in **Annex B**)

c) Recording paper by items (**Table B.4** in **Annex B**)

d) Plotting paper by items (**Table B.5** in **Annex B**)

Documents
Document Sharing Hub

Full document details: JASO C438 2008

Annex A
(Informative)
How to set brake-fluid-temperature measuring thermocouple

Introduction

This Annex is not a part of the specification, but shows one example of how to set the thermocouple to measure brake fluid temperature.

A.1 How to set brake-fluid-temperature measuring thermocouple

Figure A.1 shows how to set the thermocouple to measure brake fluid temperature.

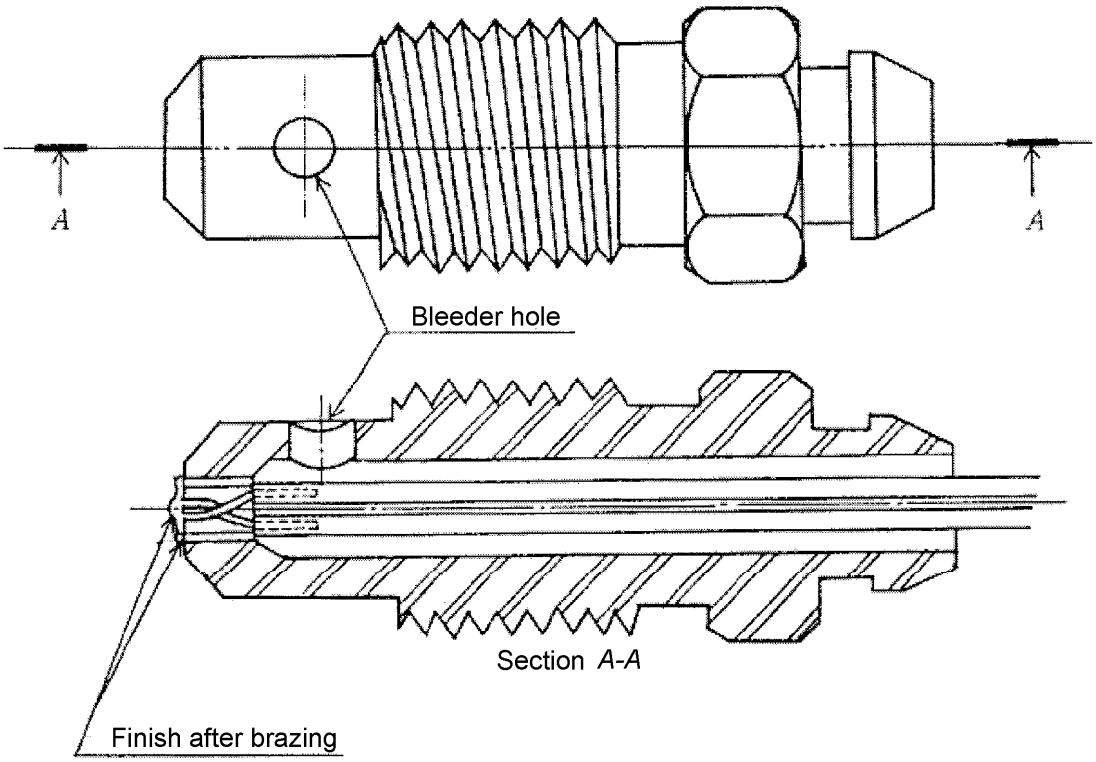

Figure A.1 How to set brake-fluid-temperature measuring thermocouples

Documents
Document Sharing Hub
Full document details: JASO C438 2008

Annex B
(Normative)
A list of test items and recording papers for service brake - vehicle simulated mountain brake fade test

Introduction

This Annex provides a tabulated list of matters specified in this standard and specifies recording papers for test results.

B.1 List of test items

Table B.1 shows a list of items to be tested in the vehicle simulated mountain brake fade test for service brake.

B.2 Recording paper

Summary of service brake specification and vehicle simulated mountain brake fade test is shown in **Table B.2**, Graphic summary of vehicle simulated mountain brake fade test for service brake in **Table B.3**, Recording chart for result of vehicle simulated mountain brake fade test for service brake in **Table B.4**, and Plotting paper for result of vehicle simulated mountain brake fade test for service brake in **Table B.5**.

Documents
Document Sharing Hub
Full document details: JASO C438 2008