Truck and bus - Disc brake caliper bench test procedure

1 Scope

This standard establishes bench test procedures for service brakes in disc brake caliper assemblies (hereinafter referred to as "caliper assemblies") that normally operate in trucks and buses. Test procedures for disc brakes used in small-sized trucks and buses shall conform to **JASO C448**. However, dynamometer tests on frictional characteristics are not included.

Furthermore, this standard shall not apply to air disc brakes.

2 Normative reference

The following standards, when referred to in this standard, constitute a part of the specifications of this standard. The most recently updated version (including addenda) shall be applied.

JASO C 421	Service brake structural integrity dynamometer test procedure - truck and bus
JASO C 441	Service brake structural durability bench test procedure
JASO C 448	Disc brake caliper bench test procedure - passenger car
JIS D 0106	Road vehicles - Brake types, braking mechanics and brake operation-Vocabulary
JIS D 0107	Road vehicles - Braking equipments-Vocabulary
JIS D 0210	General rules of brake test method of automobiles and motor cycles
JIS D 1601	Vibration testing methods for automobile parts
JIS K 2233	Non-petroleum base motor vehicle brake fluids
JIS Z 2371	Methods of salt spray testing

3 Definitions

Definitions of main terms used in this standard shall be based on **JASO C 448, JIS D 0106 and JIS D 0107**.

4 Common items

4.1 Vehicle category

Test vehicles shall be categorized according to carrying capacity and gross vehicle weight.

Category names are shown below. For reference, the titles of technical standards for truck and bus braking devices are shown in parentheses ( ).

Category M2 (class 1 bus): Bus with carrying capacity of at least 10 persons and gross vehicle weight not exceeding five tons

Category M3 (class 2 bus): Bus with carrying capacity of at least 10 persons and gross vehicle weight exceeding five tons

Category N1 (class 1 truck): Truck with gross vehicle weight not exceeding 3.5 tons

Category N2 (class 2 truck): Truck with gross vehicle weight exceeding 3.5 tons but not exceeding 12 tons

Category N3 (class 3 truck): Truck with gross vehicle weight exceeding 12 tons

4.2 Condition of each braking device component

AVA Documents
Document Sharing Hub

Full document details: JASO C459 2010

The condition of each braking device component during testing shall be as specified in **4.3** of **JIS D 0210** (hereinafter referred to as "standard products").

4.3 Test equipment

Unless otherwise specified, the following devices and instruments shall be utilized in tests:

a) **Manual pressurizing device** Pressurizing device that is used in testing in which pressure is manually applied to the caliper assembly. Shall be capable of applying a pressure of 15 MPa or more to the caliper assembly per stroke (**Figure 1**).

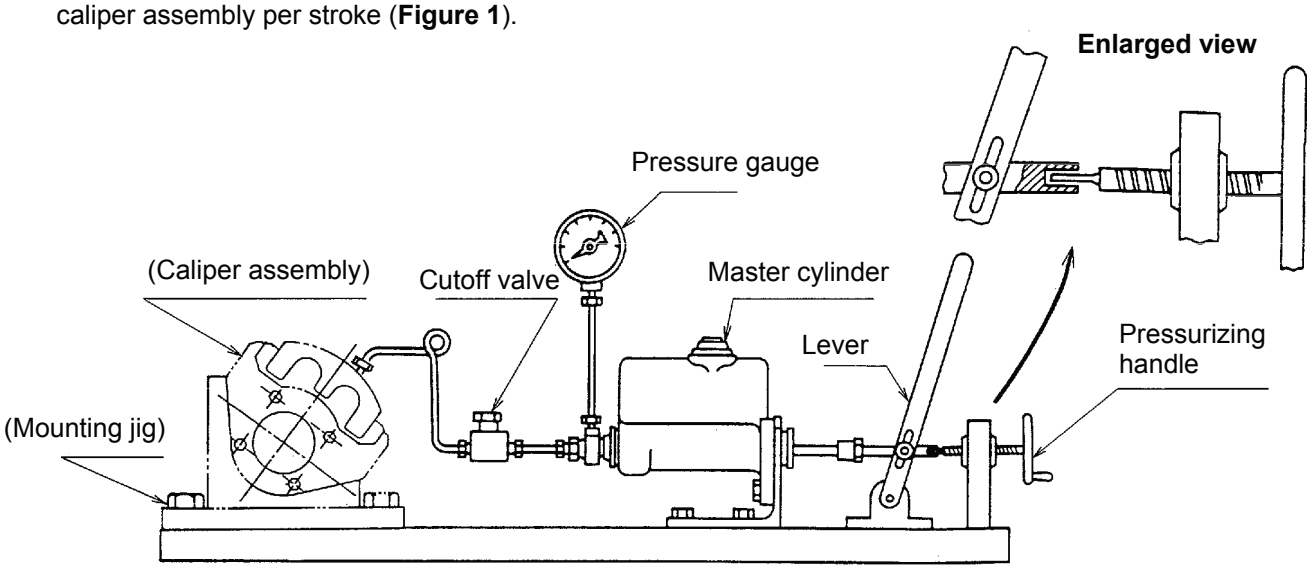

Figure 1 Example of manual pressurizing device

Note: For convenience, the lever for releasing air pressure from the caliper assembly can be operated independently from the pressurizing handle, as shown in the figure above.

b) **Automatic pressurizing device** Pressurizing device that is used in testing in which pressure is repeatedly and automatically applied to the caliper assembly. Shall be capable of applying a pressure of 15 MPa or more to the caliper assembly per stroke (**Figure 2**).

c) **Mounting** Unless otherwise specified, mounting jigs used in tests shall enable the caliper assembly's location, mounting angle, and other mounting conditions to be equivalent to those of an actual vehicle (**Figure 3**).

4.4 Test fluid

The brake fluid used in testing shall be **Class 3** as specified in **JIS K 2233** or a test fluid agreed to by the parties concerned.

Documents
Document Sharing Hub
Full document details: JASO C459 2010

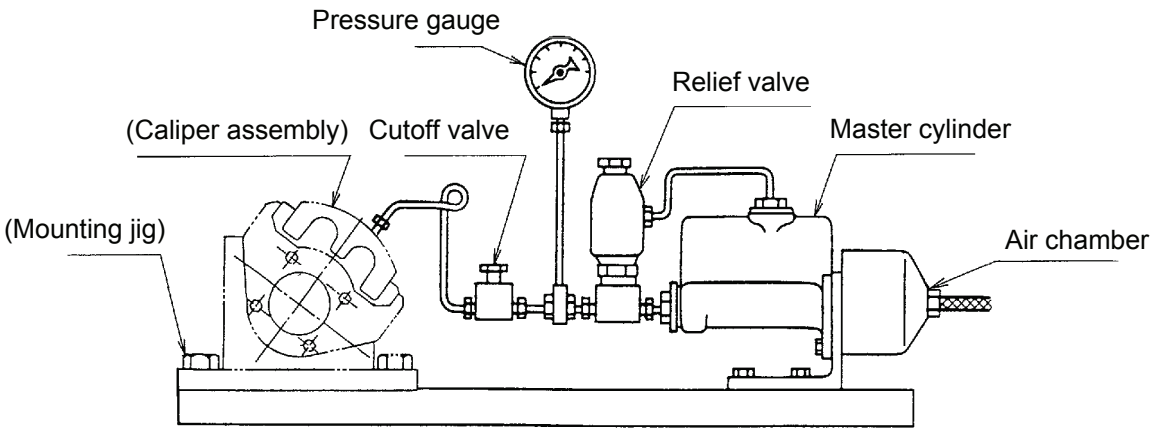

Figure 2 Example of automatic pressurizing device

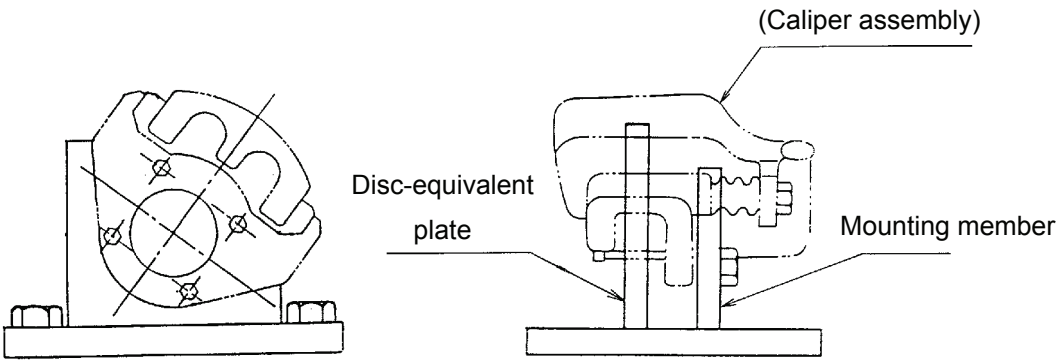

Note: For residual drag torque testing, the disc-equivalent plate shall be rotatable.

Figure 3 Example of mounting jig

5 Test procedure

5.1 Test items

Test items for caliper assemblies shall consist of those listed below.

An outline of the test items is shown in **Annex B:**

a) Fluid leakage test

b) Required fluid volume test

c) Residual drag torque test

d) Pressure and fracture resistance strength test

e) Torque fracture strength test

f) Torque durability strength test (I)

g) Torque durability strength test (II)

h) High fluid pressure durability strength test

i) Normal temperature operational durability test

j) High temperature operational durability test

k) Vibration durability test

l) Water proof test

m) Corrosion resistance test

Documents
Document Sharing Hub
Full document details: JASO C459 2010

n) Low temperature leakage test

5.2 Fluid leakage test procedure

5.2.1 Purpose

This test shall be performed before and after other tests as necessary to check for fluid leakage from the caliper assembly.

5.2.2 Test equipment

The following devices and instruments shall be utilized in the test:

a) **Pressurizing device** Manual pressurizing device specified in **4.3 a)**.

b) **Mounting jig** Mounting jig specified in **4.3 c)**.

5.2.3 Condition of braking device

Unless otherwise specified, standard products specified in **4.1** shall be used.

5.2.4 Test procedure

The test procedure shall be as follows:

a) Fix the caliper assembly to the mounting jig, and bleed the air sufficiently.

b) Apply fluid pressure of 0.7 MPa for five minutes, and check for fluid leakage.

c) Apply fluid pressure of 10 kPa for 24 hours, and check for fluid leakage.

Note: A liquid column (approx. 1200 mm) can be used as a pressurizing device.

d) Apply fluid pressure of 15 MPa for 1 minute, and check for fluid leakage.

Note: Test **d)** using high pressure shall not be performed prior to tests **b)** and **c)**. And if other tests are to be performed subsequently to that, return the piston at least 1 mm before starting the other tests.

5.2.5 Records

Keep records of the following (**A.1**):

a) Fluid leakage

b) Other noteworthy items

5.3 Required fluid volume test procedure

5.3.1 Purpose

This test shall be performed to check the fluid volume required to ensure that the caliper assembly performs its basic function.

5.3.2 Test equipment

The following devices and instruments shall be utilized in the test (**Figure 4**):

Documents
Document Sharing Hub

Full document details: JASO C459 2010

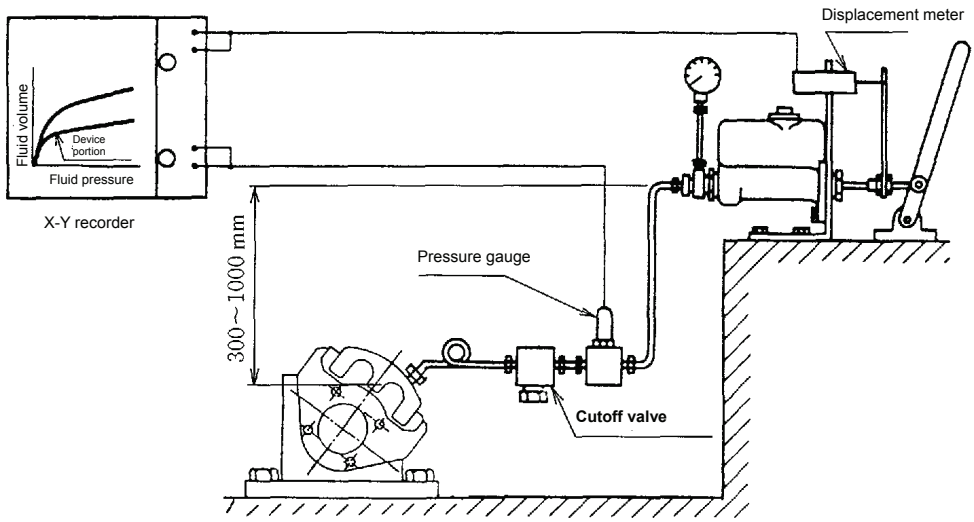

Figure 4 Example of required fluid volume test equipment

a) Pressurizing device

1) Use the manual pressurizing device specified in **4.3 a)**.

2) The pressurizing device shall be fixed at a location 300 to 1000 mm higher than the caliper assembly.

3) The relationship between the pressurizing device's piston stroke (travel) and required fluid volume shall be found beforehand.

b) Mounting jig Mounting jig specified in **4.3 c).**

c) Piping

1) When installing piping, ensure that, during pressure application and reduction, the motion of the caliper assembly is not constrained by a force greater than that generated in an actual vehicle.

2) A short brake tube shall be used for the piping between the caliper assembly and cutoff valve in order to minimize the required fluid volume in that area.

d) Recording device Shall be capable of recording the piston stroke (travel) of the pressurizing device against fluid pressure.

5.3.3 Condition of braking device

Standard products specified in **4.2** shall be used.

5.3.4 Test procedure

The test procedure shall be as follows:

a) Fix the caliper assembly to the mounting jig, and bleed the air sufficiently.

b) Close the cutoff valve, apply pressure up to 10 MPa, and record the stroke (travel) of the pressurizing device as the portion corresponding to the required fluid volume of the remaining system, excluding the caliper assembly.

c) Open the cutoff valve, and push back the piston of the caliper assembly to provide a clearance of at least 0.5 mm per pad.

d) Apply a fluid pressure of 1.0 MPa for five seconds. Repeat this action 15 times to achieve a proper setting. Note that the duration necessary for increasing and decreasing the pressure is at least two

Documents
Document Sharing Hub
Full document details: JASO C459 2010

seconds.

e) After leaving it alone for two minutes, slowly (over a span of at least two seconds) increase the pressure to 10 MPa. Record the stroke of the pressurizing device as the portion corresponding to the required fluid volume of the entire system, including the caliper assembly.

f) Repeat steps **c)** to **e)** five times.

g) Change the fluid pressure in **d)** to 10 MPa, and repeat steps **c)** to **e)** five times.

h) Find the required fluid volume of the caliper system from the difference between the recorded strokes (travel distances) in **e)** and **b)**.

5.3.5 Records

Keep records of the following (**A.2**):

a) Relationship between fluid pressure and required fluid volume (average of five results obtained for each setting fluid pressure)

b) Other noteworthy items

5.4 Residual drag torque test procedure

5.4.1 Purpose

This test shall be performed to check the residual drag force to ensure that the caliper assembly performs its basic function.

5.4.2 Test equipment

The following devices and instruments shall be utilized in the test (**Figure 5**):

a) **Pressurizing device** Manual pressurizing device specified in **4.3 a)**. However, ensure that the pressurizing device is fixed at a location 300 to 1000 mm higher than the caliper assembly.

b) **Mounting jig** Mounting jig specified in **4.3 c)**. However, ensure that mounting surfaces of the caliper assembly and disc are parallel to within 0.05 mm.

c) **Disc** Generally, use a disc that is used in the actual vehicle. However, it is permissible to use an equivalent disc that has been machined to the same precision as a disc used in the actual vehicle.

d) **Disc drive unit** The rotational speed shall be 50 min^{-1} or less. However, a unit that is driven manually may also be used.

e) **Torque measuring device** The torque measuring device shall be an electric type capable of measuring up to 3000 N·cm. However, a torque wrench may be used if the disc is to be rotated manually.

f) **Piping** When installing piping, ensure that, during pressure application/reduction and disc rotation, the motion of the caliper assembly is not constrained by a force greater than that generated in an actual vehicle.

Documents
Document Sharing Hub

Full document details: JASO C459 2010

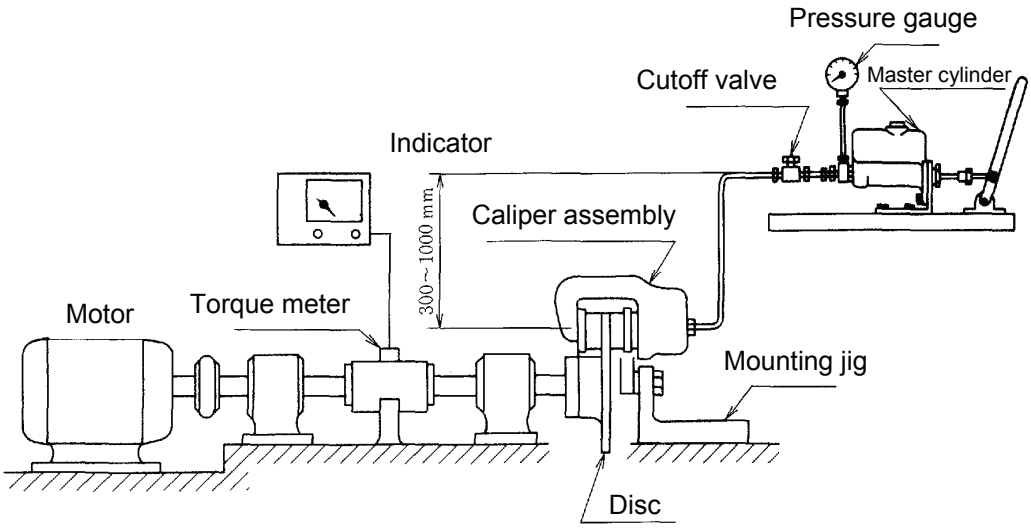

Figure 5 Example of residual drag torque test equipment

5.4.3 Condition of braking device

Standard products specified in **4.2** shall be used.

5.4.4 Test procedure

The test procedure shall be as follows:

a) Clean the disc's friction surfaces with acetone or similar product.

b) Fix the caliper assembly to the mounting jig, and bleed the air sufficiently.

c) Push back the piston of the caliper assembly to provide a clearance of at least 0.5 mm per pad.

d) Spin the disc and adjust the zero point of the residual drag torque indicator.

e) Apply a fluid pressure of 1.0 MPa for five seconds. Repeat this action 15 times to achieve a proper setting. Note that the duration necessary for increasing and decreasing the pressure is at least two seconds.

f) After leaving it alone for two minutes, rotate the disc. Measure the maximum and minimum torque of the first and tenth revolutions.

g) Change the fluid pressure in **e)** to 10 MPa, and repeat steps **c)** to **f)**.

5.4.5 Records

Keep records of the following (**A.3**):

a) Maximum and minimum residual drag torque (of the first and tenth revolutions for each preset fluid pressure)

b) Disc surface runout

c) Other noteworthy items

5.5 Pressure and fracture resistance strength test procedure

5.5.1 Purpose

This test shall be performed to check the yield point and pressure and fracture resistance strength, while tracking the process of deformation caused by fluid pressure in the caliper assembly.

5.5.2 Test equipment

The following devices and instruments shall be utilized in the test (**Figure 6**):

a) **Pressurizing device** Manual pressurizing device specified in **4.3 a)**. However, it shall be capable of

Documents
Document Sharing Hub
Full document details: JASO C459 2010

applying a fluid pressure of at least 50 MPa.

b) Mounting jig Mounting jig specified in **4.3 c)**.

c) Displacement indicator The displacement indicator will be used to measure the displacement of the caliper assembly in the axial direction at a given fluid pressure during the test.

The indicator shall be accurate to ±1 % or better.

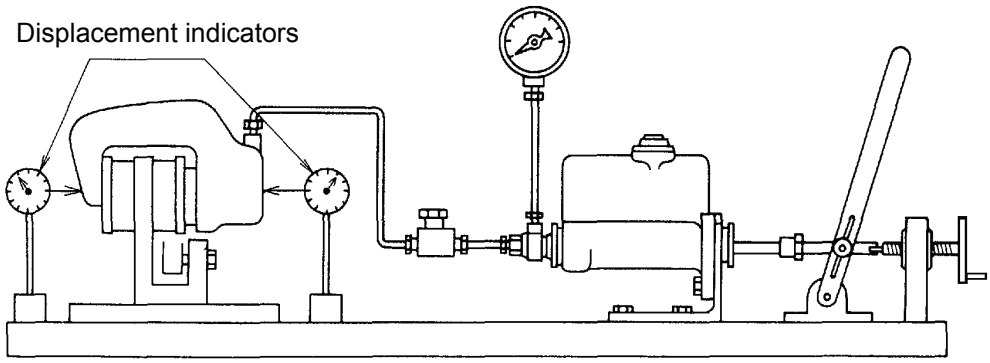

Figure 6 Example of pressure and fracture resistance strength test equipment

5.5.3 Condition of braking device

Standard products specified in **4.2** shall be used. If, however, the parking brake is integrated with the service brake, parts related to the parking brake can be removed before the test.

5.5.4 Test procedure

The test procedure shall be as follows:

a) As preparation for the test, provide a flat area at the measuring point to prevent measurement errors caused by roughness on the casting surface. As a rule, the measuring point shall be on the effective diameter line. If, however, that is not possible, alternative points shall be selected (**Figure 7**).

b) Fix the caliper assembly to the mounting jig, and bleed the air sufficiently.

c) Attach a displacement gauge to measure the displacement of the caliper assembly in the axial direction at the position on the effective diameter line.

d) Apply a fluid pressure of 10 MPa for five seconds. Repeat this action 15 times to obtain a proper setting, and adjust the zero point of the displacement indicator.

e) Gradually increase the fluid pressure, and calculate the amount of caliper deformation in the axial direction from the values indicated by the displacement gauge. Record the relationship between that and the fluid pressure (**Figure 7**).

f) Continue measuring up to the pressure at which the fluid pressure and deformation lose their proportional relationship. If there is a risk of the caliper assembly breaking and the displacement indicator becoming damaged as a result of the increasing pressure, the indicator can be removed.

g) While watching for fluid leakage and abnormalities in the components, increase the pressure until fracture occurs. If, however, no fracture occurs within the capacity limit of the pressurizing device, stop the test and record that fact.

5.5.5 Records

Keep records of the following (**A.4**):

Documents
Document Sharing Hub
Full document details: JASO C459 2010

a) Amount of caliper assembly deformation in axial direction

b) Fracture pressure, fracture mode or deformation state

c) Other noteworthy items

a) Example 1

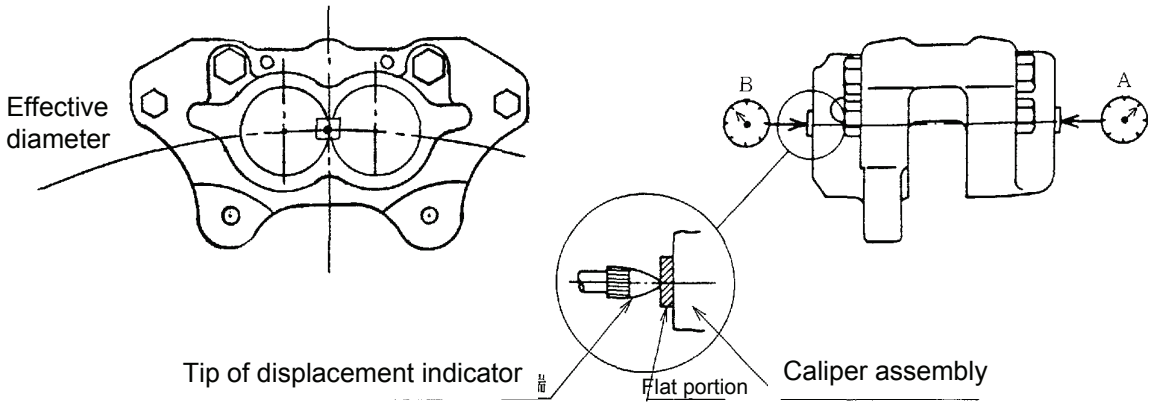

Axial-direction deformation = |Indicated value A + Indicated value B|

b) Example 2

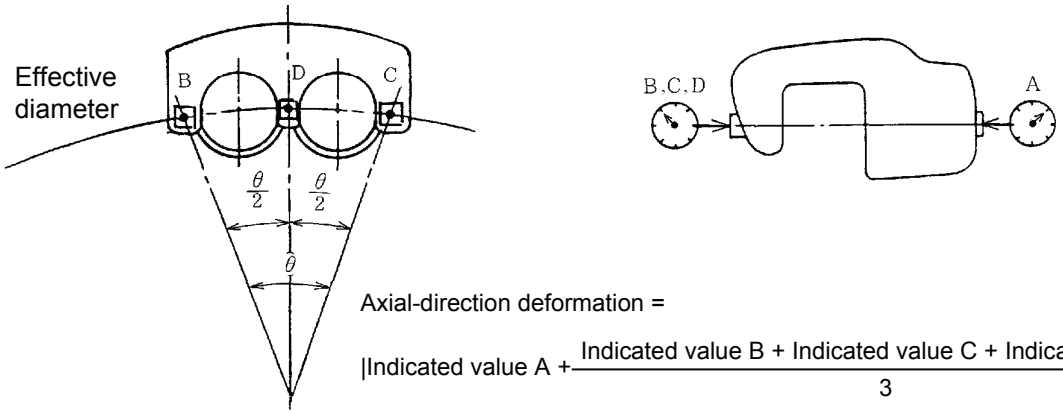

Axial-direction deformation =

$$\left|\text{Indicated value A} + \frac{\text{Indicated value B} + \text{Indicated value C} + \text{Indicated value D}}{3}\right|$$

Figure 7 Examples of displacement indicator installation

5.6 Torque fracture strength test procedure

5.6.1 Purpose

This test shall be performed to check the yield condition and fracture of the caliper assembly, while tracing the process of permanent deformation caused by braking.

5.6.2 Test equipment

An inertia dynamometer shall be used.

5.6.3 Condition of braking device

Standard products specified in **4.2** shall be used.

5.6.4 Test procedure and records

The detailed test procedure and records are described in **JASO C421** 6.1(fracture strength test). (5.6 of **Table B.1**)

5.7 Torque fracture strength test procedure (I)

AVA Documents
Document Sharing Hub

Full document details: JASO C459 2010

5.7.1 Purpose

This test shall be performed to check the durability of a caliper assembly under load conditions that are more severe than normal.

5.7.2 Test equipment

An inertia dynamometer shall be used.

5.7.3 Condition of braking device

Standard products specified in **4.2** shall be used.

5.7.4 Test procedure and records

The detailed test procedure and records are described in **JASO C 421** 6.2 (durability strength test). (5.7 of **Table B.1**)

See **Annex B** (**5.7** of **Table B.1**) for contents of the test. Also, the detailed test procedure such as the calculation and recording method of inertia and control torque is described in the durability strength test in **JASO C421**.

5.8 Torque durability strength test procedure (II)

5.8.1 Purpose

This test shall be performed to check the durability of a caliper assembly under normal load conditions.

5.8.2 Test equipment

A cyclic test machine specified in **JASO C 441** shall be used.

5.8.3 Condition of braking device

Standard products specified in **4.2** shall be used.

5.8.4 Test procedure and records

The detailed test procedure and records are described in **JASO C 441.** (5.8 of **Table B.1**)

5.9 High fluid pressure durability strength test procedure

5.9.1 Purpose

This test shall be performed to check the durability of a caliper assembly under fluid pressure conditions that are more severe than normal.

5.9.2 Test equipment

The following devices and instruments shall be utilized in the test:

a) **Pressurizing device** Automatic pressurizing device specified in **4.3 b)**

b) **Mounting jig** Mounting jig specified in **4.3 c)**

5.9.3 Condition of braking device

Standard products specified in **4.2** shall be used.

5.9.4 Test procedure

The test procedure shall be as follows:

a) Measure the dimensions of each component of the caliper assembly as needed.

b) Fix the caliper assembly to the mounting jig, and bleed the air sufficiently.

c) The high fluid pressure durability strength test shall be performed without interruption under the conditions shown in **Table 1**. Observe and record any leakage discovered from the seal edges after the test.

d) After the completion of the 100,000th cycle, measure the dimensions of each component of the caliper

Documents
Document Sharing Hub

Full document details: JASO C459 2010

assembly again as needed. Check the caliper opening, pad deformation or crushing, seal wear or damage, and other details.

Table 1 High fluid pressure durability strength test conditions

Fluid pressure: MPa	15±0.5
Cycle rate: Cycles/h	1000±100
Cycles required: Cycles	10×10^4

5.9.5 Records

Keep records of the following (**A.5**):

a) Fluid leakage

b) Cracks or destruction

c) Caliper opening, pad deformation or crushing, permanent deformation of components, seal wear and damage, etc.

d) Other noteworthy items

5.10 Normal temperature operational durability test procedure

5.10.1 Purpose

This test shall be performed to check the fluid pressure operational durability of the caliper assembly's piston seal, particularly under normal temperature conditions.

5.10.2 Test equipment

The following devices and instruments shall be utilized in the test:

a) **Pressurizing device** Automatic pressurizing device specified in **4.3 b)**

b) **Mounting jig** Mounting jig specified in **4.3 c)**

5.10.3 Condition of braking device

Standard products specified in **4.2** shall be used. The pad thickness, however, shall be in a half-worn condition.

5.10.4 Test procedure

The test procedure shall be as follows:

a) Before the test, if necessary, measure and record the dimensions relevant to the piston seal (seal dimensions, hardness, etc.) and the basic performance of the caliper assembly, such as the residual drag torque and required fluid volume.

b) Fix the caliper assembly to the mounting jig, and bleed the air sufficiently.

c) Perform the normal temperature operational durability test under the test conditions specified in **Table 2**. Observe and record any leakage discovered from the seal edges after the test.

Table 2 Normal temperature operational durability test conditions

Temperature: °C	4 to 35
Fluid pressure: MPa	10±0.3
Cycle rate: Cycles/h	1000±100
Cycles required: Cycles	100×10^4

d) Perform the fluid leakage test as specified in **5.2**.

e) Measure and record as specified in **a)** as needed.

f) Disassemble the caliper assembly, and observe and record the condition of the seal, cylinder inner surface, and piston.

Documents
Document Sharing Hub

Full document details: JASO C459 2010

5.10.5 Records

Keep records of the following (**A.6**):

a) Fluid leakage discovered after the test.

b) Results of the fluid leakage test.

c) Condition of the seal, cylinder inner surface, and piston after the test.

d) Changes in the dimensions relevant to the piston seal (seal dimensions, hardness, etc.), required fluid volume, and residual drag torque as needed.

e) Other noteworthy items

5.11 High temperature operational durability test procedure

5.11.1 Purpose

This test shall be performed to check the fluid pressure operational durability of the caliper assembly's piston seal, particularly under high-temperature conditions.

5.11.2 Test equipment

The following devices and instruments shall be utilized in the test:

a) **Pressurizing device** Automatic pressurizing device specified in **4.3 b)**

b) **Mounting jig** Mounting jig specified in **4.3 c)**

c) **Constant-temperature oven** Shall be capable of maintaining the caliper assembly in a (120±5)°C atmosphere.

5.11.3 Condition of braking device

Standard products specified in **4.2** shall be used. The pad thickness, however, shall be in a half-worn condition.

5.11.4 Test procedure

The test procedure shall be as follows:

a) Before the test, if necessary, measure and record the dimensions relevant to the piston seal (seal dimensions, hardness, etc.) and the basic performance of the caliper assembly, such as the residual drag torque and required fluid volume.

b) Fix the caliper assembly to the mounting jig, and bleed the air sufficiently.

c) Perform the high temperature operational durability test under the test conditions specified in **Table 3**. After the test, observe and record any leakage discovered from the seal edges.

Table 3 High temperature operational durability test conditions

Temperature:	°C	120±5
Fluid pressure:	MPa	10±0.3
Cycle rate:	Cycles/h	1000±100
Cycles required:	Cycles	14×10^4

d) After completion of the test, promptly suspend heating and operation, and relieve the residual pressure. Open the door of the constant-temperature oven, and cool for 60 minutes.

e) After cooling for 60 minutes, set the caliper assembly outside the oven and allow it to cool at room (ambient) temperature for (25±5) hours.
After cooling, record any leakage observed from the seal edges.

f) Perform a fluid leakage test as specified in **5.2**.

Documents
Document Sharing Hub
Full document details: JASO C459 2010

g) Measure and record as specified in **a)** as needed.

h) Disassemble the caliper assembly, and observe and record the condition of the seal, cylinder inner surface, and piston.

5.11.5 Records

Keep records of the following (**A.7**):

a) Fluid leakage discovered after the test.

b) Results of the leakage test.

c) Condition of the seal, cylinder inner surface, and piston after the test.

d) Changes in the dimensions relevant to the piston seal (seal dimensions, hardness, etc.), required fluid volume, and residual drag torque as needed.

e) Other noteworthy items

5.12 Vibration durability test procedure

5.12.1 Purpose

This test shall be performed to check the vibration durability of the caliper assembly.

5.12.2 Test equipment

The following devices and instruments shall be utilized in the test (**Figure 8**):

a) **Vibrator** The vibrator or shake table shall be capable of performing the vibration durability test specified in **JIS D 1601**. With the caliper assembly and mounting jig placed on top, the vibrator shall be capable of continuous vibration under the test conditions specified in **Table 4**.

b) **Pressurizing device** The automatic pressurizing device specified in **4.3 b)** shall be used. However, ensure that the pressurizing device is fixed at a location 300 to 600 mm higher than the caliper assembly.

c) **Mounting jig** The mounting jig installable so as to enable the calliper assembly vibration in the three-dimensional direction, obtained by combining the vertical, longitudinal, and horizontal directions. However, the rigidity of the jig shall be sufficiently high to prevent resonance.

d) **Piping** In the piping system, the brake hose shall be connected to the caliper assembly joint section so as not to restrict the vibration of the caliper assembly vibration.

Documents
Document Sharing Hub

Full document details: JASO C459 2010

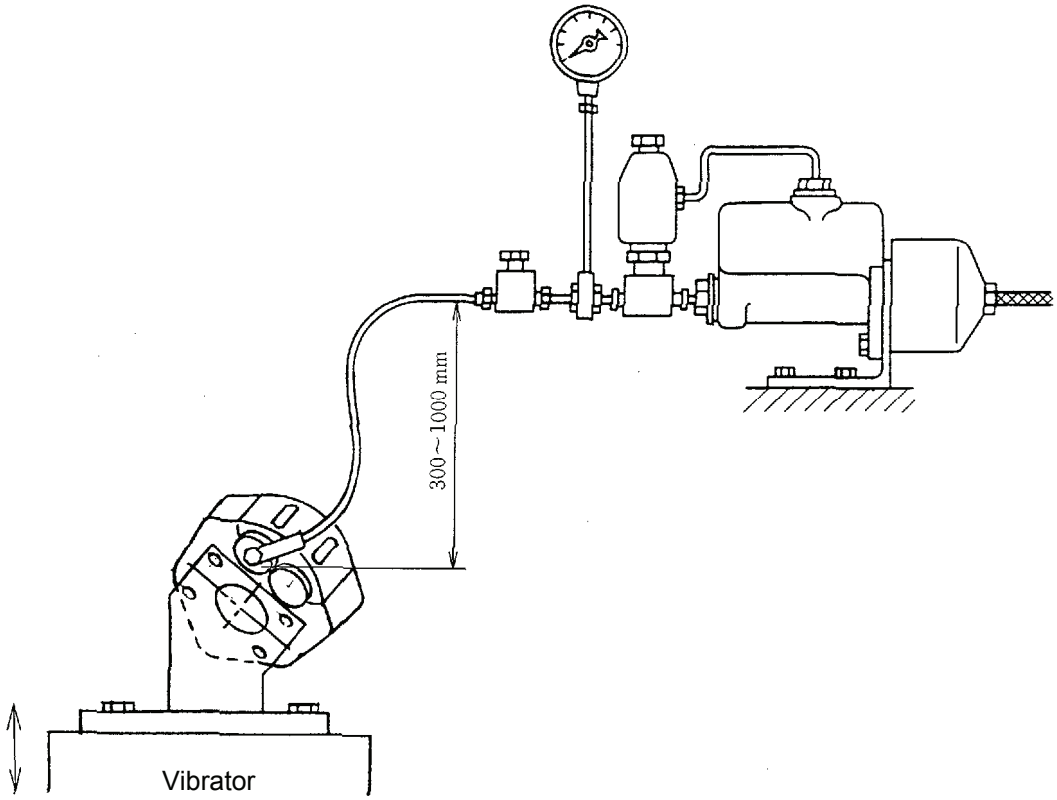

Figure 8 Example of vibration durability test equipment

Table 4 Vibration durability test conditions

Vibration acceleration: m/s^2	±200 (three-dimensional direction)
Vibration frequency: Hz	60
Vibrations: number	1000×10^4
Applied fluid pressure: MPa	3.5; however, fluid pressure shall be applied in 1-minute intervals and held for 1 second each time.

Note: If there are resonance points in the caliper parts at a vibration frequency of 60 Hz, the test frequency can be changed after discussion between the parties concerned.

5.12.3 Condition of braking device

Standard products specified in **4.2** shall be used as follows:

a) The pad thickness shall be in a 2/3 worn condition.

b) The tightening torque of bolts and screws shall be set at the lower limit.

5.12.4 Test procedure

The test procedure shall be as follows:

a) Before the test, measure the dimensions of each brake component if necessary.

b) Fix the caliper assembly to the mounting jig, and bleed the air sufficiently.

c) Perform the vibration durability test through continuous operation under the test conditions indicated in **Table 4**. The waveform, however, should be as close to a sine wave as possible.
Incidentally, if an abnormality occurs, the test shall be stopped.

Documents
Document Sharing Hub
Full document details: JASO C459 2010