Torsion bar for Automobiles

1. Scope

This standard specifies the torsion bar (hereinafter referred to as "bar") that has a circular cross section, which is used for automobile suspension or for tilting a tilt cab mechanism.

2. Normative references

The following standards, when referred to in this standard, constitutes a part of the specifications of this standard. As required, the most recently updated version of the applicable standard (including addenda) shall be applied.

JIS B0103: Spring's vocabulary
JIS G0558: Methods of measuring decarburized depth of steel
JIS G0565: Method for magnetic particle testing of ferromagnetic materials and classification of magnetic particle indication
JIS G4051: Carbon steels for machine structural use
JIS G4801: Spring steels
JIS Z2243: Brinell hardness test -- Test method
JIS Z2245: Rockwell hardness test -- Test method

3. Definitions

Definitions of main terms used in this standard, in addition to be in conformity with **JIS B0103**, shall be as follows:

a) Length of bar
Length indicated by symbol *L* in **Figure 1**.

b) Diameter of bar
Diameter indicated by symbol *d* in **Figure 1**.

c) Length of grip portion
Length indicated by symbol l_0 in **Figure 1**.

d) Major diameter of grip portion
Diameter indicated by symbol D_0 in **Figure 1**.

e) Length of taper portion
Length indicated by symbol l_t in **Figure 1**.

f) Length of parallel portion
Length indicated by symbol *l* in **Figure 1**.

g) Maximum design torque
Maximum possible torque of bar in use.

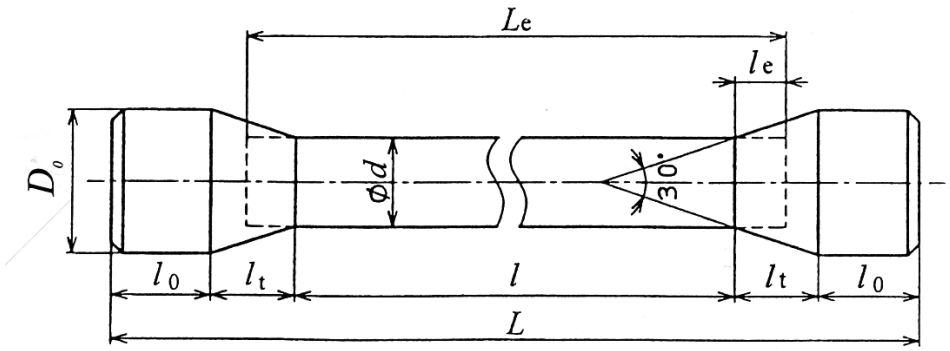

Figure 1 Shape of bar and symbols for portions of bar

Documents
Document Sharing Hub
Full document details: JASO C612 2004

4. Material

The material of the bar shall be in conformity with SUP6, SUP7, SUP9, SUP9A, and SUP12 of **JIS G4801**, and S45C of **JIS G4051**. The standard diameter of the bar shall be as indicated in **Table 1**. Materials or dimensions other than the foregoing may be specified upon agreement between the concerned parties.

Table 1 Standard diameter of bar **Unit**: mm

13.0	13.2	13.4	13.6	13.8	14.0	14.2	14.4	14.6	14.8
15.0	15.2	15.4	15.6	15.8	16.0	16.2	16.4	16.6	16.8
17.0	17.2	17.4	17.6	17.8	18.0	18.2	18.4	18.6	18.8
19.0	19.2	19.4	19.6	19.8	20.0	20.2	20.4	20.6	20.8
21.0	21.2	21.4	21.6	21.8	22.0	22.2	22.4	22.6	22.8
23.0	23.2	23.4	23.6	23.8	24.0	24.2	24.4	24.6	24.8
25.0	25.3	25.7	26.0	26.3	26.7	27.0	27.3	27.7	28.0
28.3	28.7	29.0	29.3	29.7	30.0	30.3	30.7	31.0	31.3
31.7	32.0	32.3	32.7	33.0	33.3	33.7	34.0	34.3	34.7
35.0	35.3	35.7	36.0	-	-	-	-	-	-

5. Formulas

5.1 Symbols and units to be used in formulas

Figure 1 and **Table 2** indicate the symbols and units to be used in formulas.

Table 2 Symbols and units to be used in formulas

Symbol	Meaning of symbol	Unit
d	Diameter of bar	mm
d_0	Width across flats (S) if bar end is shaped with a hexagon Standard pitch circle diameter if bar end is shaped with serrations	mm
L	Overall length of bar	mm
L_e	Total effective length of bar	mm
l	Length of bar where diameter is consistently d	mm
l_t	Length of taper portion	mm
l_e	Equivalent length of taper portion (length obtained by converting taper diameter into d)	mm
l_0	Length of grip portion	mm
T	Torsional torque	N·mm
ϕ	Torsional angle	rad
G	Shear modulus (7.55×10^4)	N/mm^2
k_T	Torsional spring constant	N·mm/ rad
τ	Torsional stress	N/mm^2
P	External force applied to arm end	N
k	Vertical spring constant applied to arm end	N/mm
R	Length of arm	mm
δ	Deflection at arm end (at force bearing point)	mm
α	Angle between arm centre line and horizontal line while bearing load P	rad
β	Angle between arm centre line and horizontal line while bearing no load	rad

Remark: $1N/mm^2=1MPa$

Documents
Document Sharing Hub
Full document details: JASO C612 2004

5.2 General formula and equivalent length

The torsional spring constant, torsional angle, and torsional stress of the bar are as follows:

$$k_T = \frac{T}{\phi} = \frac{\pi d^4 G}{32 L_e} \qquad \text{..... (1)}$$

$$\phi = \frac{32\,TL_e}{\pi d^4 G} \qquad \text{..... (2)}$$

$$\tau = \frac{16\,T}{\pi d^3} = \frac{\phi d G}{2\,L_e} \qquad \text{..... (3)}$$

Where total effective length L_e is obtained by adding equivalent length l_e of the taper portion to length l with the constant diameter d, per the following formula:

$$l_e = \frac{l_t}{3}\left[\frac{d}{d_0} + \left(\frac{d}{d_0}\right)^2 + \left(\frac{d}{d_0}\right)^3\right] \qquad \text{..... (4)}$$

$$L_e = l + 2l_e \qquad \text{..... (5)}$$

5.3 Formula for bar combined with arm

When a bar is used in combination with an arm as indicated in **Figure 2**, the spring constant P/δ at the force bearing point in the direction of the load is not constant. It varies by the attachment angle of the arm and the operating angle of the bar. Therefore, the formula is expressed by a function that includes the angle between the arm and the horizontal line, as follows:

$$P = \frac{k_T(\alpha + \beta)}{R\cos\alpha} = \frac{k_T}{R} C_1 \qquad \text{..... (6)}$$

$$k = k_T\{1 + (\alpha + \beta)\tan\alpha\}\frac{1}{R^2\cos^2\alpha} = \frac{k_T}{R^2} C_2 \qquad \text{..... (7)}$$

$$\delta = \frac{R\cos\alpha}{\dfrac{1}{\alpha + \beta} + \tan\alpha} = RC_3 \qquad \text{..... (8)}$$

C_1, C_2, and C_3 are indicated in nomographs shown in **Figures 3**, **4**, and **5**.

Documents
Document Sharing Hub
Full document details: JASO C612 2004

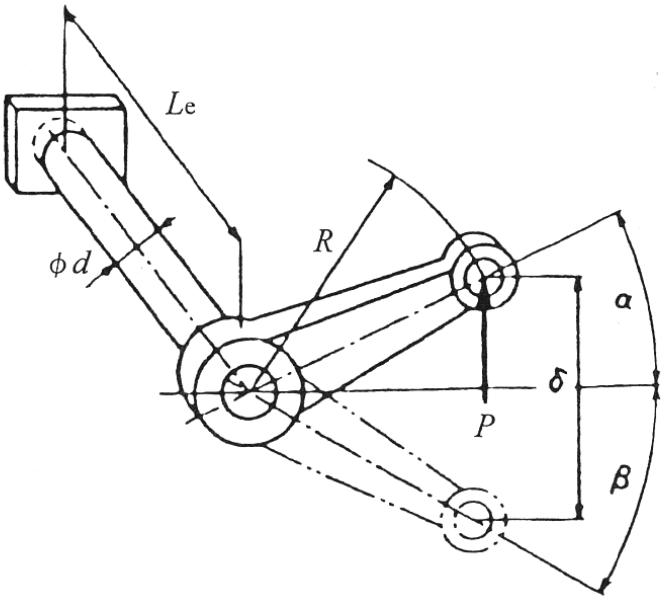

Figure 2 Loading mechanism of bar

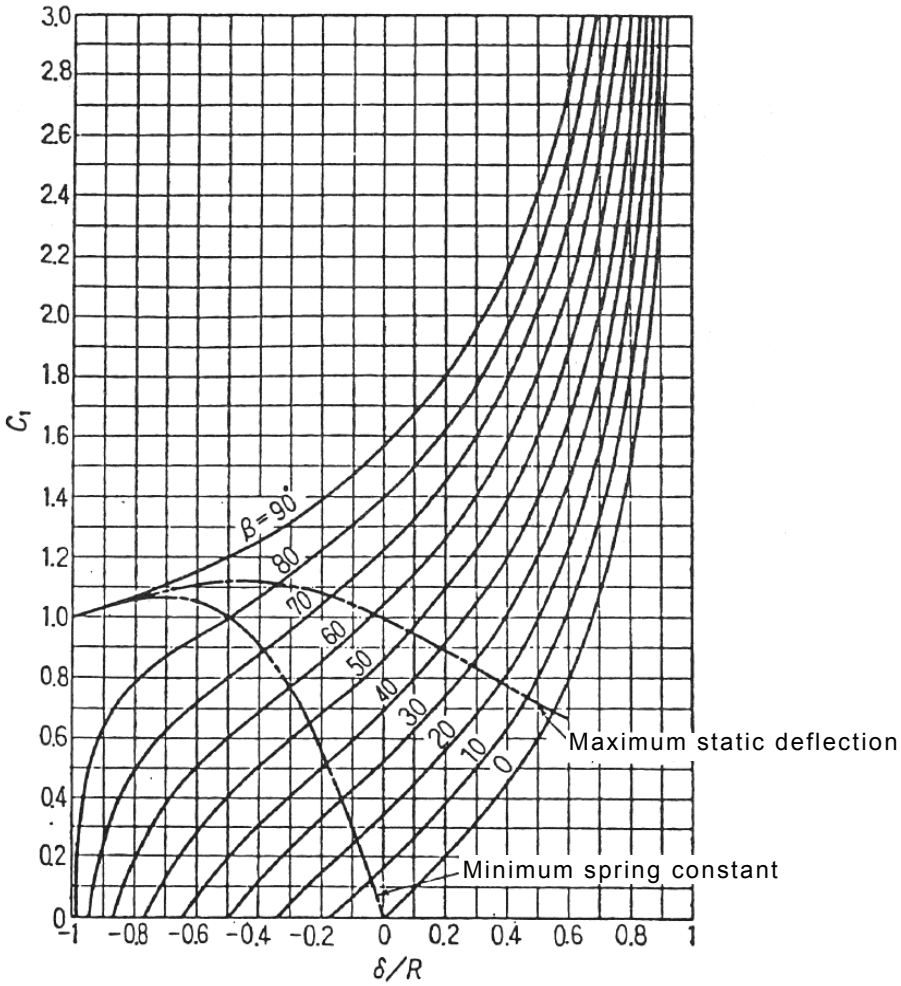

Figure 3 Variation of characteristic by position of arm

Documents
Document Sharing Hub
Full document details: JASO C612 2004

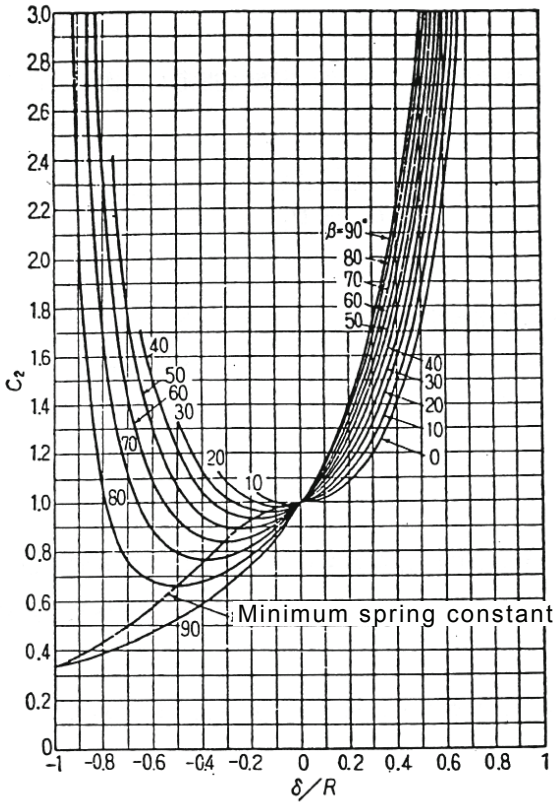

Figure 4 Variation of spring constant by position of arm

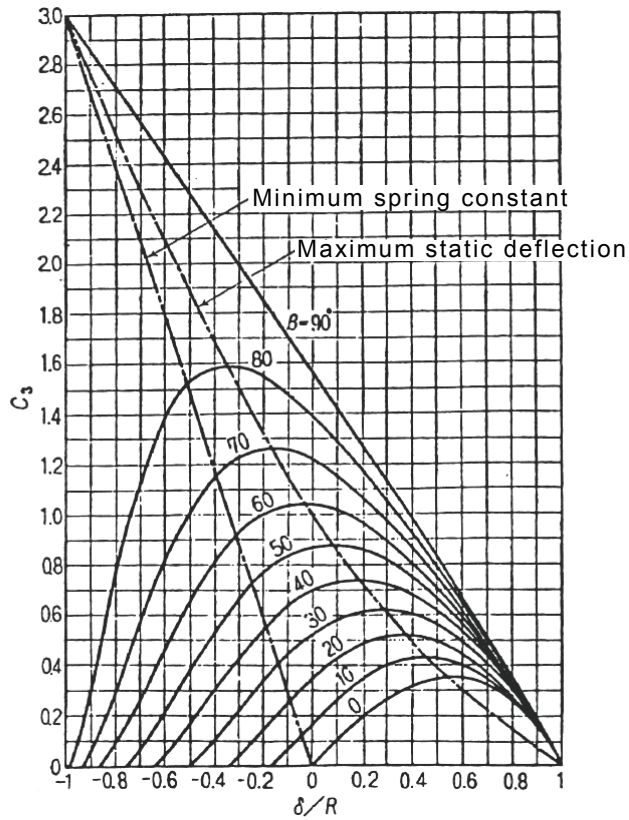

Figure 5 Variation of static deflection by position of arm

Documents
Document Sharing Hub
Full document details: JASO C612 2004