Automobile Parts - Disc Wheels

1. Scope

This standard specifies the types, names, performances, test procedures, and inspection methods of steel and light alloy disc wheels used for automobiles (hereinafter referred to as "wheel").
This standard, however, shall not be applied to wheels for temporary tyres, motorcycles, industrial vehicles, construction vehicles, and agricultural vehicles.

Remark: A wheel comprising either or both the rim and disc made of light alloy is referred to as a light alloy wheel.

2. Normative reference

The following standards, when referred to in this standard, constitutes a part of the specifications of this standard. As required, the most recently updated version of the applicable standard (including addenda) shall be applied.

JIS B0401-2: ISO system of limits and fits -- Part 2: Tables of standard tolerance grades and limit deviations for holes and shafts
JIS B4650: Torque wrenches
JIS D0201: Automobile parts -- General rules of electroplating
JIS D0202: General rules of coating films for automobile parts
JIS D2701: Wheel nuts for automobiles
JIS D4102: Wheels/rims -- Classification, designation and marking
JIS D4202: Automobile tyres -- Designation and dimensions
JIS D4103: Automobile parts -- Disc wheels -- Performance requirements and marking
JIS D4207: Tyre valves for automobiles
JIS D4218: Automobile parts -- Wheels -- Contours of rims
JIS D4220: Fastening methods and dimensions of disc wheels for automobiles
JATMA YEAR BOOK: -- Japan Automobile Tyre Manufacturers Association Standard

3. Type

Wheel types and applicable rim contours shall be classified by usage as indicated in **Table 1**.

Table 1 Wheel types and applicable rim contours

Wheel type by usage	Applicable rim contour	
	Type	Symbol
For mini-sized passenger cars and mini-sized trucks	Divided rim	DT
For passenger cars	5° tapered drop-centre rim	5° DC
For light trucks and light buses	Semi-drop-centre rim	SDC
	15° tapered drop-centre rim	15° DC
For trucks and buses	Flat base rim	IR and IRA

Documents
Document Sharing Hub
Full document details: JASO C614 2004

4. Designation of each portion

The designation of each portion of a wheel shall be in conformity with **JIS D4102** paragraphs **2** (definition of terms), **3** (designation of dimensions of each portion of rim and disc), **4** (wheel types), and **5** (rim types), and **Figures 1** to **6** in this standard.

Remark: **Figures 1** to **6** show typical examples in which designations bearing the * mark indicate those that are not specified in **JIS D4102**.

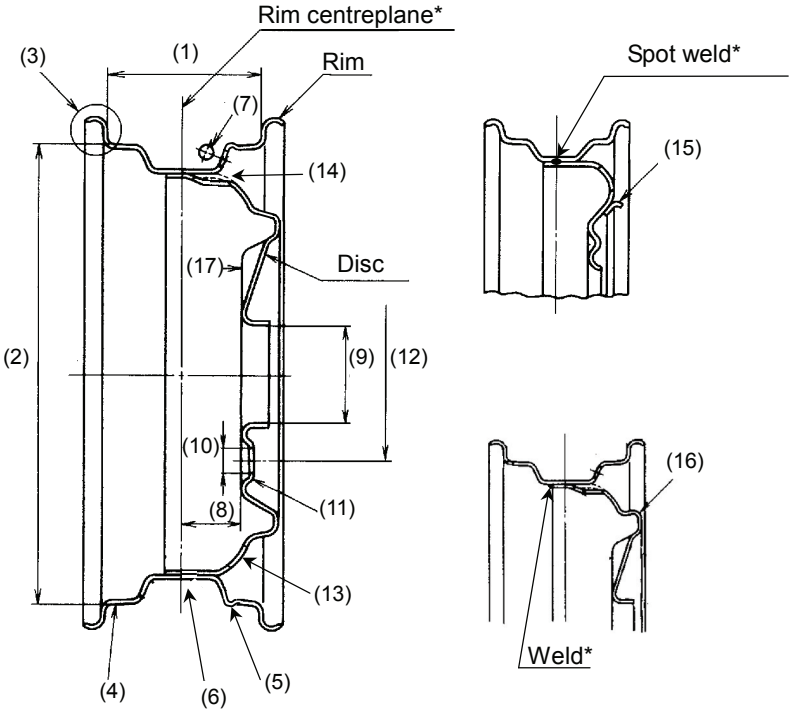

No.	Designation
1	Rim width
2	Rim diameter
3	Flange
4	Bead seat
5	Hump
6	Well
7	Valve hole
8	Offset (inset)
9	Centre hole diameter
10	Bolt hole diameter
11	Nut seat*
12	Pitch circle diameter of nut seats*
13	Ornamental hole*
14	Window*
15	Peg for cap stop*
16	Bulge for cap stop*
17	Attachment face*

Figure 1 5° tapered drop-centre rim (5° DC)

AVA Documents
Document Sharing Hub
Full document details: JASO C614 2004

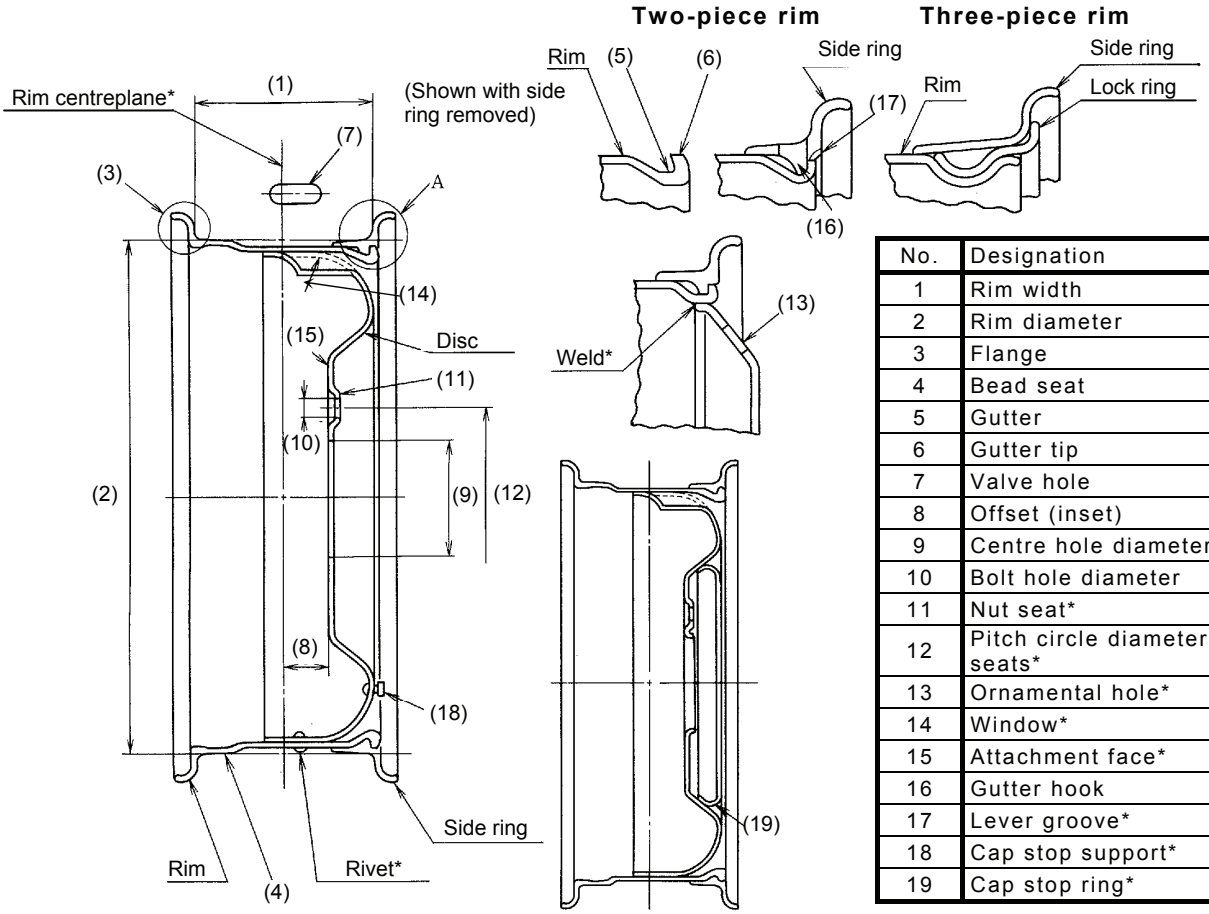

No.	Designation
1	Rim width
2	Rim diameter
3	Flange
4	Bead seat
5	Gutter
6	Gutter tip
7	Valve hole
8	Offset (inset)
9	Centre hole diameter
10	Bolt hole diameter
11	Nut seat*
12	Pitch circle diameter of nut seats*
13	Ornamental hole*
14	Window*
15	Attachment face*
16	Gutter hook
17	Lever groove*
18	Cap stop support*
19	Cap stop ring*

Figure 2 Semi-drop-centre rim (SDC)

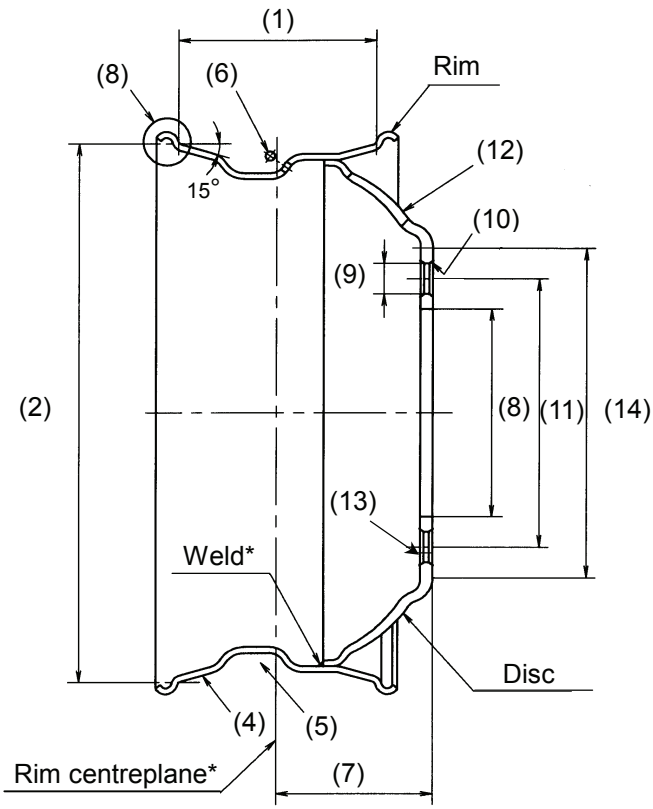

No.	Designation
1	Rim width
2	Rim diameter
3	Flange
4	Bead seat
5	Well
6	Valve hole
7	Offset (outset)
8	Centre hole diameter
9	Bolt hole diameter
10	Nut seat*
11	Pitch circle diameter of nut seats*
12	Ornamental hole*
13	Attachment face*
14	Attachment face diameter

Figure 3 15° tapered drop-centre rim (15° DC)

Documents
Document Sharing Hub
Full document details: JASO C614 2004

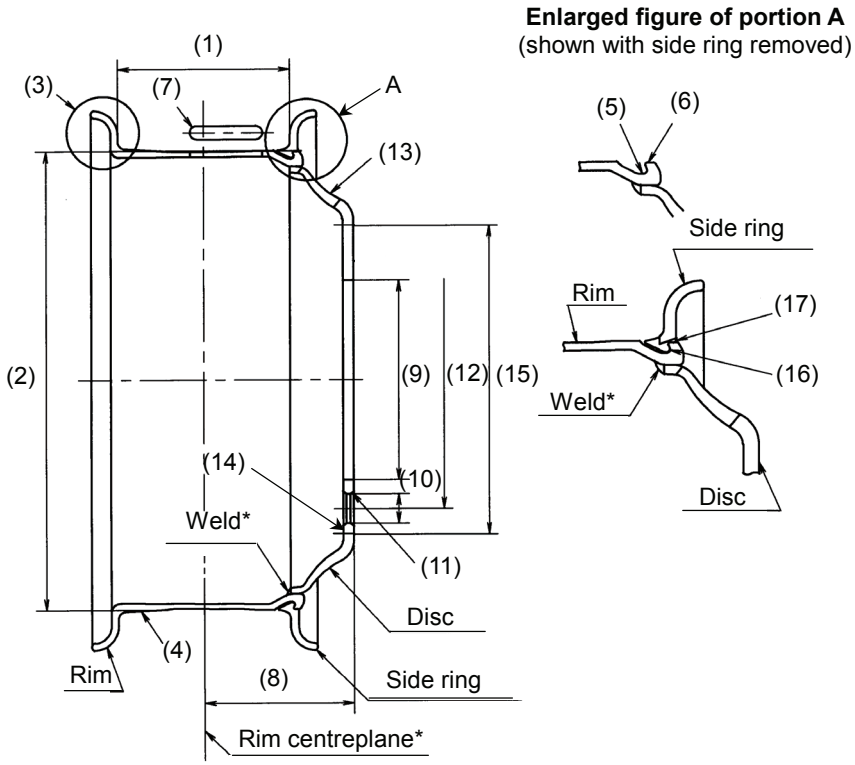

No.	Designation
1	Rim width
2	Rim diameter
3	Flange
4	Bead seat
5	Gutter
6	Gutter tip
7	Valve hole
8	Offset (outset)
9	Centre hole diameter
10	Bolt hole diameter
11	Nut seat*
12	Pitch circle diameter of nut seats*
13	Ornamental hole*
14	Attachment face*
15	Attachment face diameter
16	Gutter hook
17	Lever groove*

Remark: Refer to **JIS D4218** for IRA.

Figure 4 Flat base rim (IR and IRA)

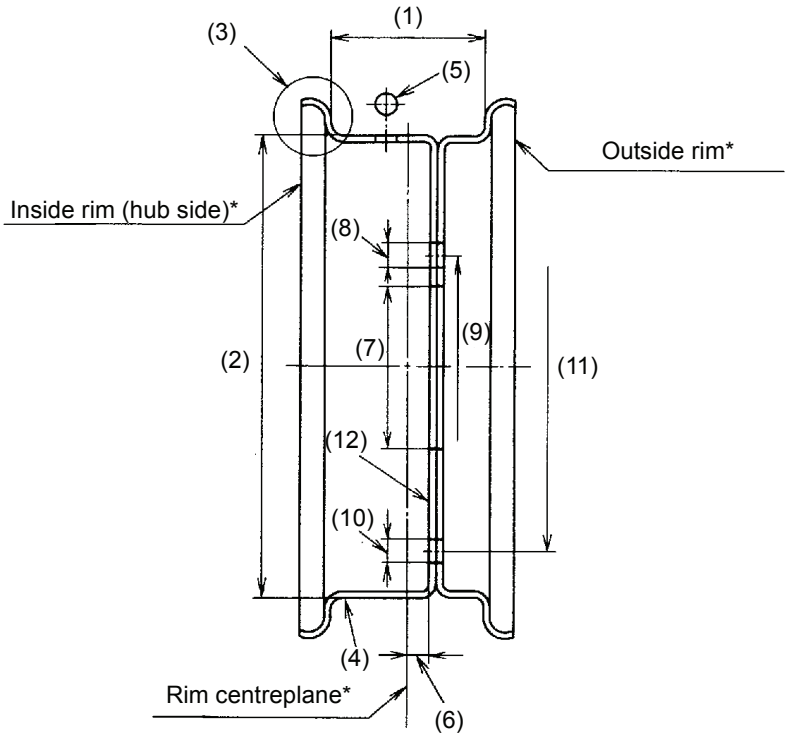

No.	Designation
1	Rim width
2	Rim diameter
3	Flange
4	Bead seat
5	Valve hole
6	Offset (inset)
7	Centre hole diameter
8	Bolt hole diameter
9	Pitch circle diameter of bolt holes(1)
10	Clamping bolt hole diameter*
11	Pitch circle diameter of clamping bolt holes*
12	Attachment face*

Note:(1)

It may be referred to as the "pitch circle diameter of bolt holes" if nut seats are not provided.

Figure 5 Divided rim (DT)

Documents
Document Sharing Hub
Full document details: JASO C614 2004

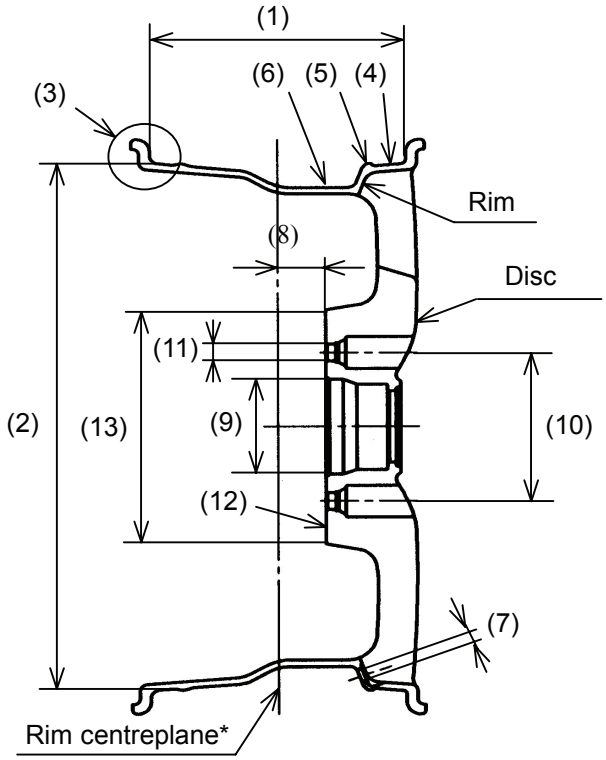

a) Light alloy 1-piece wheel

No.	Designation
1	Rim width
2	Rim diameter
3	Flange
4	Bead seat
5	Hump
6	Well
7	Valve hole
8	Offset (inset)
9	Centre hole diameter
10	Pitch circle diameter of nut seats*
11	Bolt hole diameter
12	Attachment face*
13	Attachment face diameter
14	Pitch circle diameter of clamping bolt holes*

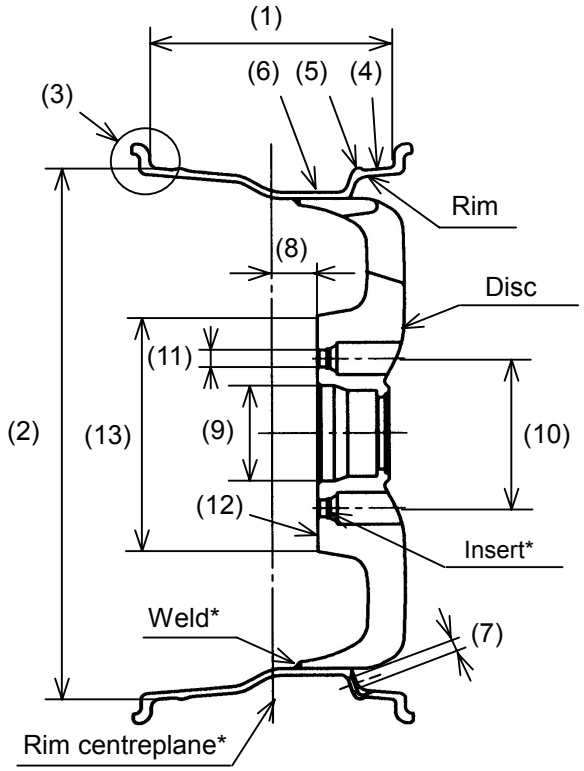

b) Light alloy 2-piece wheel

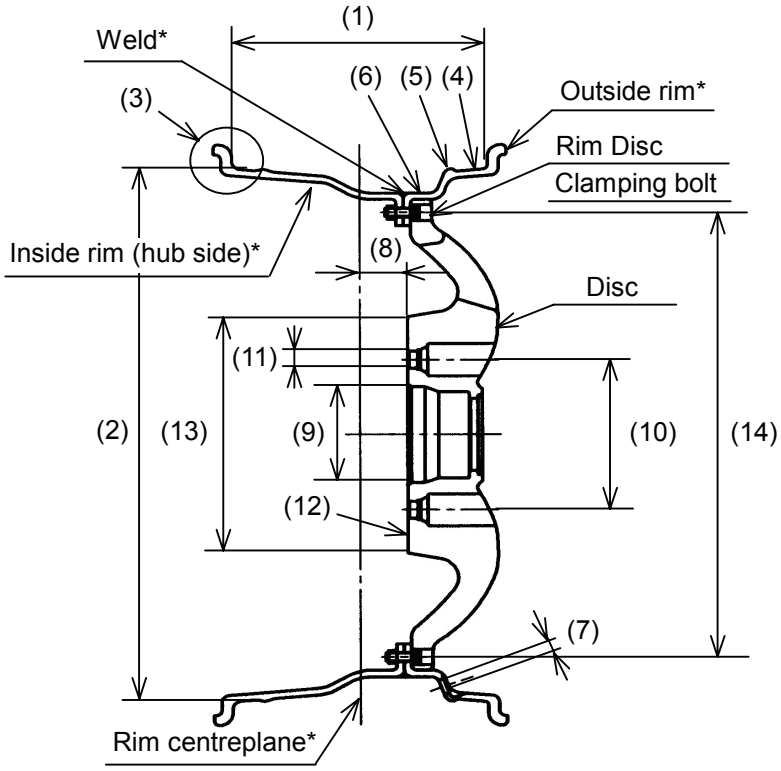

c) Light alloy 3-piece wheel

Figure 6 Light alloy wheels

Documents
Document Sharing Hub
Full document details: JASO C614 2004

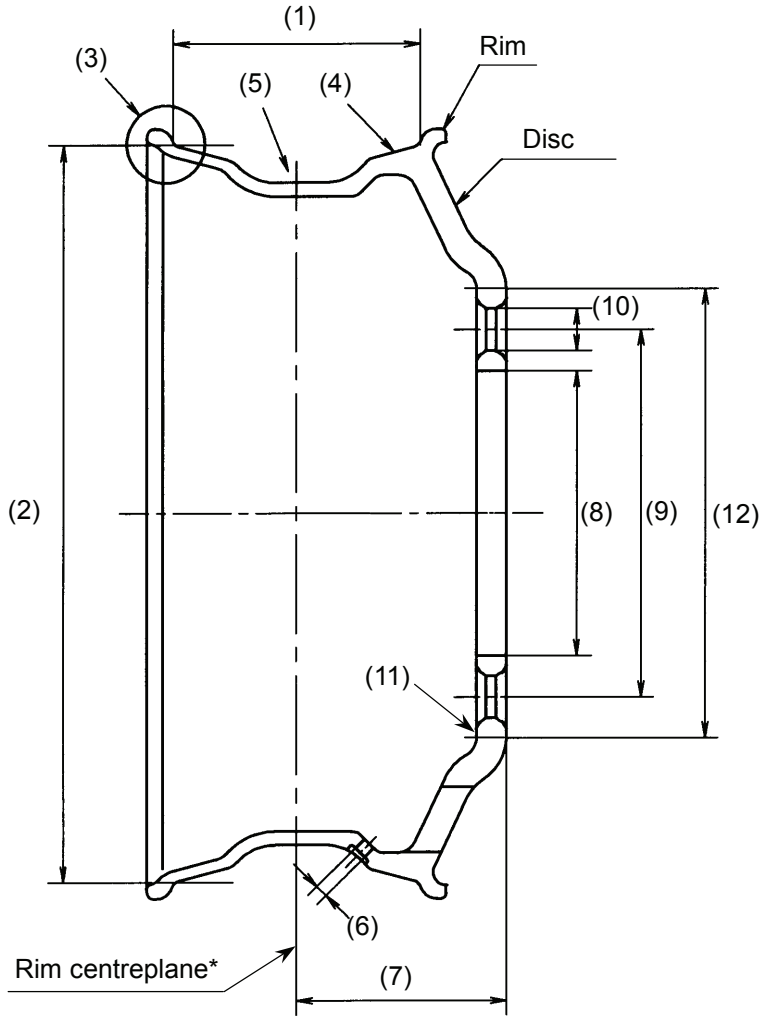

No.	Designation
1	Rim width
2	Rim diameter
3	Flange
4	Bead seat
5	Well
6	Valve hole
7	Offset (outset)
8	Centre hole diameter
9	Pitch circle diameter of nut seats*
10	Bolt hole diameter
11	Attachment face*
12	Attachment face diameter

d) Wheels for trucks and buses

Figure 6 Light alloy wheels (continuation)

Documents
Document Sharing Hub
Full document details: JASO C614 2004

5. Performance

5.1 General performance

General performance shall be in conformity with paragraph **4.1** of **JIS D4103** (General performance).

5.2 Rotational bending durability

Rotational bending durability shall be in conformity with paragraph **4.2** (Rotational bending durability) of **JIS D4103**.

5.3 Radial load durability

Radial load durability shall be in conformity with paragraph **4.3** (Radial load durability) of **JIS D4103**.

5.4 Shock resistance for passenger cars

Shock resistance for passenger cars shall be in conformity with paragraph **4.4** (Shock resistance for passenger cars) of **JIS D4103**.

5.5 Shock resistance for commercial vehicles

Shock resistance for commercial vehicles shall be in conformity with paragraph **4.5** (Shock resistance for commercial vehicles) of **JIS D4103**. This performance shall be applicable only to light alloy wheels for commercial vehicles.

5.6 Air tightness of rims

No air leakage shall be permitted to occur at the rim when the test prescribed in paragraph **8.6** is being conducted. This performance shall be applied only to wheels for tubeless tyres.

5.7 Strength of joint between rim and disc

No breakage shall be permitted to occur at the joint when the test prescribed in paragraph **8.7** is being conducted.

5.8 Rigidity of the seat of a nut

No deformation exceeding 0.6 mm shall be permitted to occur at the seat of a nut when the test prescribed in paragraph **8.8** is being conducted. This performance shall be applied only to steel wheels using installation methods T_1S and S_1S in accordance with **JIS D4220**.

5.9 Static unbalance of wheel

The tolerance of mass eccentricity of the wheel, as measured in accordance with paragraph **8.9**, shall be in accordance with **Table 2**.

Remark: Static unbalance of wheel (g·cm) = mass eccentricity (cm) × mass of wheel (g)

Table 2 Tolerance of mass eccentricity of wheel **Unit**: cm

Wheel type by usage \ Nominal rim diameter	Max. 12	(*) 12.5	13	(*) 13.5	14	(*) 14.5	15	(*) 15.5	16	17	17.5	18	19	19.5	20	22.5	24
For mini-sized passenger cars, mini-sized trucks, and passenger cars	0.09		0.09		0.10		0.11		0.11	0.12		0.12	0.12		0.12		
For light trucks and light buses with a single wheel	0.13	0.13	0.13	0.13	0.14	0.14	0.15	0.15	0.16		0.16						
For light trucks and light buses with dual wheels	0.15		0.15		0.16		0.18		0.20		0.20						
For trucks and buses												0.22		0.22	0.24	0.24	0.24

Remark 1: A wheel with a removable side ring shall be measured with the side ring attached.

Remark 2: A wheel with a split type side ring shall have the split of the side ring positioned 180° from the valve hole of the rim.

Remark 3: Other than a valve hole, the split of a split type side ring, and a lever groove, objects that are shaped to create a significant static unbalance in design shall be excluded.

Remark 4: The use of wheels whose nominal rim diameter bears the (*) mark is not recommended in new designs.

AVA Documents Document Sharing Hub

Full document details: JASO C614 2004

6. Dimensions and tolerances

6.1 Rims

6.1.1 Contours of rims

The dimensions of the contours of rims shall be in conformity with **JIS D4218**. The dimensions of the flange widths shall be as indicated in **Table 3**, which are measured in accordance with paragraph **9.1**.

Table 3 Dimensions of flange widths

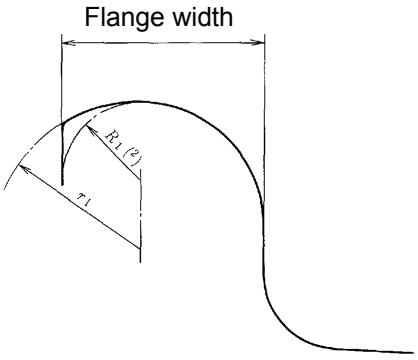

Unit: mm

Type of rim contour	Dimension of flange width			
	Standard dimension	Tolerance		Mismatch of flange widths
5° DC	B (minimum) of **JIS D4218** Annex 1 or value indicating B	+3 0		Within 2
SDC	B (minimum) of **JIS D4218** Annex 1 + minimum R of tip of flange	Flange symbols E, F, and GS	+4 0	Within 3
IR and IRA		Flange symbol S	+5 0	
		Flange symbols T, V, and WI	+6 0	Within 4
15° DC	In conformity with **JIS D4218**, paragraph 7 (15° tapered drop centre rim)			Within 5

Note:(2)

R_1 of flange shall be in conformity with R_1 of **JIS D4218**.

6.1.2 Circumferential dimension of rims

The circumferential dimension of a rim shall be in conformity with **JIS D4218** or the **JATMA Year Book**, which is in compliance with **JIS D4202**. The measurement method shall be in compliance with paragraph **9.2**, and the dimensions at measuring point A shall be as indicated in **tables 4** and **5**.

Documents
Document Sharing Hub
Full document details: JASO C614 2004

Table 4 Circumferential dimension of rims (5° DC and SDC)

Unit: mm

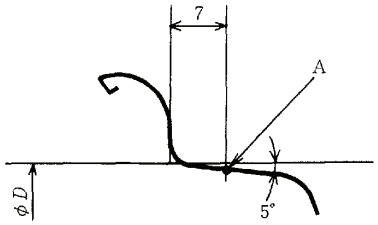

Type of rim contour	Nominal rim diameter	D	Circumference at D		Circumference at A	
			Standard dimension	Tolerance	Standard dimension	Tolerance
5° DC SDC(3)	10	253.2	795.5	±1.2	791.6	±1.2
	12	304.0	955.0		951.2	
	13	329.4	1034.8		1031.0	
	14	354.8	1114.6		1110.8	
	15	380.2	1194.4		1190.6	
	16	405.6	1274.2		1270.4	
	17	436.6	1371.6		1367.8	
	18	462.0	1451.4		1447.6	
	19	487.4	1531.2		1527.4	
	20	512.8	1611.0		1607.2	

Note:(3)

Excluding 7.00N

Table 5 Circumferential dimension of rims (15° DC, IR, and IRA)

Unit: mm

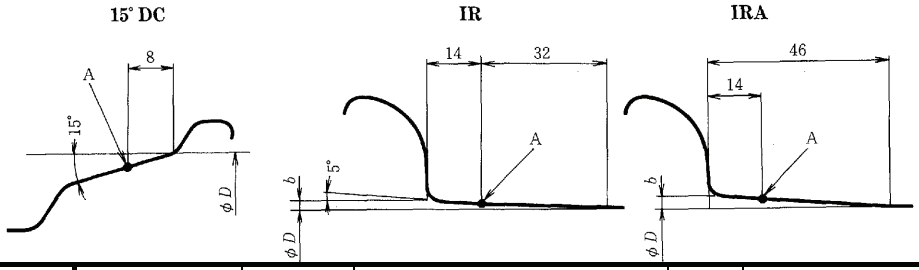

Type of rim contour	Nominal rim diameter	D	Circumference at D		b	Circumference at A	
			Standard dimension	Tolerance		Standard dimension	Tolerance
15° DC	12.5 (*)	317.5	997.5	±1.2	-	984.0	±1.2
	13.5 (*)	342.9	1077.3			1063.8	
	14.5 (*)	368.3	1157.0			1143.6	
	15.5 (*)	393.7	1236.8			1223.4	
	17.5	444.5	1396.4			1383.0	
	19.5	495.3	1556.0			1542.6	
	22.5	571.5	1795.4			1782.0	
IR	18	457.2	1436.3		2.0	1441.2	
	20	508.0	1596.0			1600.8	
	24	609.6	1915.1			1920.0	
IRA	18	457.2	1436.3		2.5	1447.3	
	20	508.0	1596.0			1606.9	
	24	609.6	1915.1			1926.0	

Remark: The use of wheels whose nominal rim diameter bears the (*) mark is not recommended in new designs.

AVA Documents
Document Sharing Hub
Full document details: JASO C614 2004

6.1.3 Protrusion of rivet head of rim

When a rim and disc are assembled with rivets, the protrusion of the heads of the rivets from the rim surface shall be as indicated in **Table 6.**

Table 6 Protrusion of rivet head of rim Unit: mm

Type of rim contour	Protrusion
5° DC	Max. 1.0
SDC	Max. 1.5

6.2 Side ring

When a tyre is mounted on a rim with a split type side ring and inflated to the maximum air pressure in accordance with the Air Pressure - Load Correspondence Table indicated in the **JATMA YEAR BOOK**, the clearance of the split of the side ring shall be as indicated in **Table 7**, provided that the tyre bead is properly seated on the side ring, and the side ring is properly mounted on the rim base.

Table 7 Clearance at split of side ring Unit: mm

Type of rim contour	Clearance
SDC	2 to 6
IR and IRA	2 to 7

6.3 Disc Portion

6.3.1 Flatness of disc attachment face

The flatness of the disc attachment face shall be as follows:

a) Steel wheel

The flatness of the contact face along the circumference[(4)] of the disc attachment face shall be as indicated in **Table 8**.

Table 8 Flatness of disc attachment face on steel wheel Unit: mm

Type of rim contour		Flatness
5° DC	For single wheel	Max. 0.2
	For dual wheels	Max. 0.5
SDC 15° DC	For single wheel	Max. 0.4
	For dual wheels	Max. 0.5
IR and IRA		Max. 0.5

Note:[(4)]

Its location shall be in the vicinity of the diameter (D_4) of the attachment area in conformity with **JIS D4102**.

b)Light alloy wheel

The flatness along the circumference[(4)] of the face for attaching a machined disc shall be a maximum of 0.1 mm. However, for attaching a stamped disc, the flatness shall be as indicated in **Table 8**.

6.3.2Position of attachment hole

The coaxiality between the hub hole centre line and the pitch circle centre line of the nut seats or the pitch circle centre line of the bolt holes shall be as indicated in **Table 9**.

Table 9 Coaxiality of attachment hole position Unit: mm

Type of rim contour		Coaxiality			
		Attachment method T_2, S_2	Attachment method T_1D, S_1D, T_2, S_2	Attachment method T_1S, S_1S, F_1L	Attachment method FI, F
5° DC		---	Max. ϕ0.3	Max. ϕ0.3	Max. ϕ0.6
SDC 15° DC	For single wheel	---	---	Max. ϕ0.4	
	For dual wheels	Max. ϕ0.6	---	---	
R and IRA		Max. ϕ0.6	---	---	

Remark: The attachment method shall be in conformity with **JIS D4220**.

Documents
Document Sharing Hub
Full document details: JASO C614 2004