Road vehicles - Bench test procedures for steering ball joints

1. Scope

This standard specifies the bench test procedures for the ball joint used in the automotive steering system (hereinafter referred to as "ball joint").

Remark:

This standard does not cover the dust cover on the inner ball joint side.

2. Normative reference

The following standards contain which, through reference in this Standard, constitute provision of this Standard. The most recent editions of the standard indicated below shall be applied.

JIS K 6259 Rubber, vulcanized or thermoplastics - Determination of ozone resistance
JIS Z 2371 Methods of salt spray testing
JIS Z 8901 Test powders and test particles
JASO Z 213 Glossary of terms relating to steering systems of automobiles

3. Definitions

Definitions of main terms used in this standard shall be as follows.

a) Outer ball joint

A ball joint consisting of the tie rod ends as specified in JASO Z 213

b) Inner ball joint

A ball joint consisting of the rack ends as specified in JASO Z 213

4. Types of tests

The following types of tests shall be as follows.

a) Oscillation angle test
b) Torque test
c) Rigidity test
d) Rigidity test after application of heavy load
e) Extrusion and drawing strength test
f) Ball stud static strength test
g) Assembly static strength test
h) Fatigue strength test
i) Abrasion durability test
j) Muddy water durability test
k) Dust cover ozone deterioration test
l) Dust cover low temperature test
m) Dust cover heat resistance test
n) Dust cover chemical resistance test
o) Corrosion resistance test

5. Common test conditions

The common test conditions shall be as follows.

a) Unless otherwise specified, the test shall be conducted in an atmosphere at the room temperature.
b) A test piece shall be mounted by a sufficiently rigid means to the extent that the purpose of the test might not be impaired.
c) A mounting jig shall be so shaped as not to impair the purpose of testing.

AVA Documents
Document Sharing Hub

Full document details: JASO C715 2005

6. Ball joint test procedure

6.1 Oscillation angle test

This test shall be conducted as follows to evaluate the ball joint in terms of oscillation angle.

a) Test setup

Mount the ball joint onto the jig as shown in **Figure 1**.

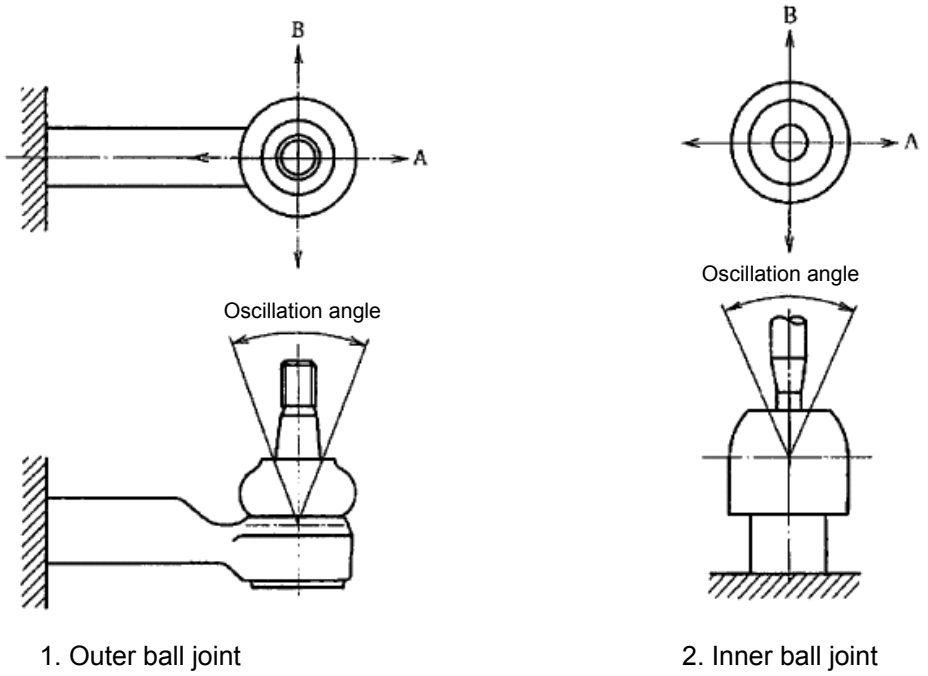

Figure 1 Ball joint mounting procedure

b) Test conditions

Measurements shall be taken in direction A, and in direction B that is perpendicular to direction A, from the position at which the ball stud is placed in the upright position as shown in **Figure 1**.

c) Test steps

To determine the oscillation angle, use a measuring instrument as shown in **Figure 2**.

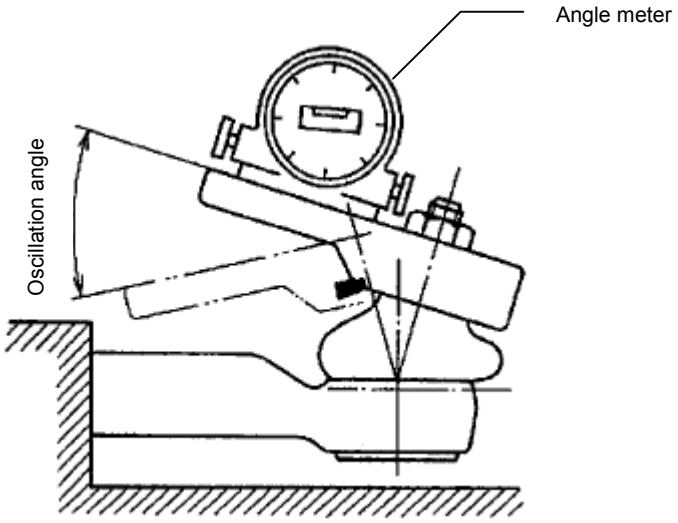

Figure 2 Oscillation angle measuring instrument

Documents
Document Sharing Hub
Full document details: JASO C715 2005

In the relationship between the oscillation angle and the oscillation torque, the torque may rise at the end of oscillation as shown in **Figure 3**. An angle up to the starting point of such rising torque, therefore, shall be taken tactually for the maximum oscillation angle (see **Figure 3**).

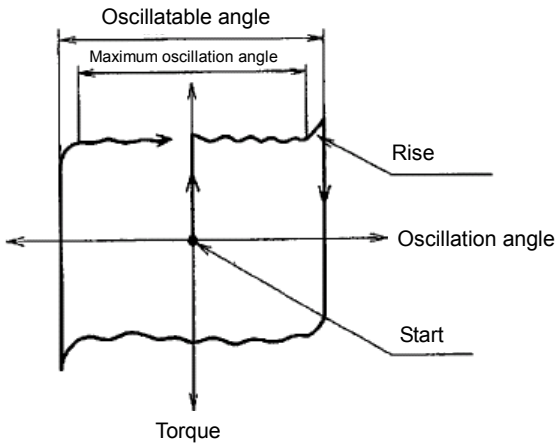

Figure 3 Torque-angle curves

d) Measurement items and records

Measure and record the following items for the oscillation angle test.

1) Oscillatable angle[1]

An oscillation angle mechanically oscillatable

2) Maximum oscillation angle

The maximum uniformly oscillatable angle at which the ball stud does not interfere with any part, but a stable steady-state torque is available

Note:[1]

The oscillatable angle may be taken for the maximum oscillation angle as agreed between the parties concerned in delivery.

6.2 Torque test

This test shall be conducted as follows to evaluate the ball joint in terms of rotation and oscillating torques.

a) Test setup

Mount the ball joint onto the jig as shown in Figure 4. Set the jig so that the dust cover has the normal dimension of installation[2]. To determine torque, use a torque gauge or any measuring instrument that meets the test conditions specified in **6.2 b**).

Note:[2]

The normal dimension of installation shall comply with **Figure 5**.

Documents
Document Sharing Hub
Full document details: JASO C715 2005

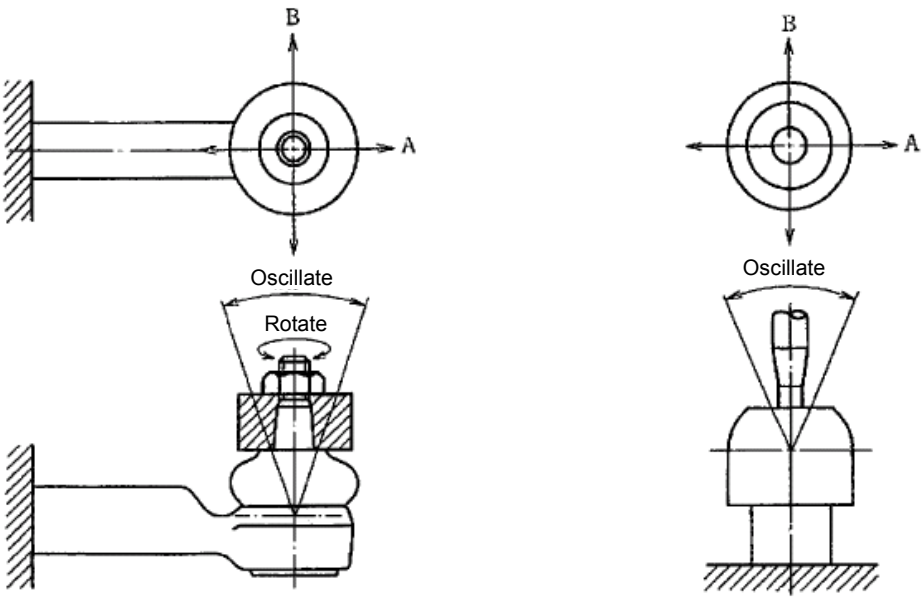

1. Outer ball joint

2. Inner ball joint

Figure 4 Conditions of ball joint mounted for torque test

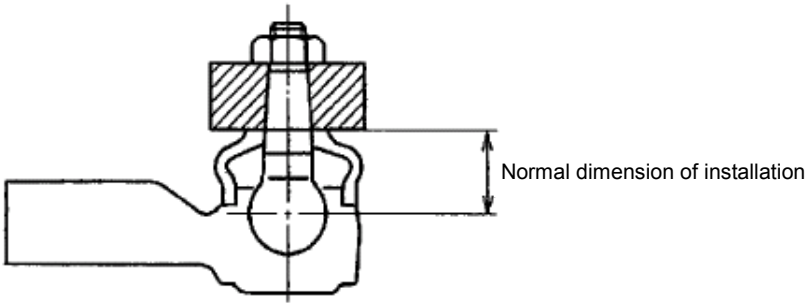

Figure 5 Normal dimension of installation of dust cover

b) Test conditions

The test conditions shall comply with **Table 1.**

Table 1 Ball joint torque test conditions

	Measurement item	Measurement procedure	Measuring rate(3)	Measurement temperature
Outer ball joint	Rotation torque (N·m)	Rotating reciprocally within ± 40° or between the maximum steering angles, with the ball stud in an upright position as shown in **Figure 4**	3 through 18°/s	Room temperature (5 to 35 °C), or specified (low or high temperature) as required
Inner ball joint	Oscillation torque (N·m)	Oscillating within ± 20° or at the maximum steering angle in direction A, and in direction B that is perpendicular to direction A, as shown in **Figure 4**	3 through 18°/s	

Note:(3)

Measure frequency dependence characteristics as necessary. Measurement conditions are to be set up between the parties concerned. Examine the relationship between torque and frequency when the measurement frequency is varied with a predetermined displacement angle. Typical conditions are, for example: displacement angle: ± 2°; measurement frequencies: 0.1, 1, 2, .. 16 Hz (in 2-Hz increments).

Documents
Document Sharing Hub
Full document details: JASO C715 2005

c) Test steps

Prior to measurement, give five reciprocating oscillations through the maximum oscillation angle to the ball stud, and five each clockwise and counterclockwise rotations through 360°. Then, leave the ball stud to stand for 24 h or more and, and determine the first starting torque and steady-state torque. Then, give five reciprocating oscillations through the maximum oscillation angle, and five each clockwise and counterclockwise rotations through 360°. Then, determine both the starting and steady-state torques.

d) Measurement items and records

Measure and record the following items.

1) Test conditions of **b)** (measurement procedure and measuring rate)

2) Starting torque

3) Steady-state torque (maximum, minimum, and mean value = (max + min) / 2)[4]

4) Torque-angle curves[5] (see **Figure 6**)

5) Ambient temperature during measurement

Note:[4]

If a torque wrench is used for taking measurements, stable values can be set as mean values, and the maximum and minimum values may be omitted.

Note:[5]

The torque-angle curves may be omitted if the torque value is directly read on a torque wrench.

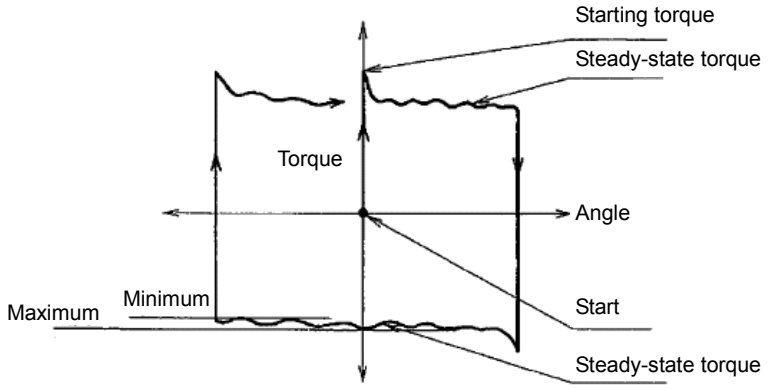

Figure 6 Torque-angle curves

6.3 Rigidity test

This test shall be conducted as follows to evaluate the ball joint in terms of rigidity.

a) Test setup

Mount the ball joint onto the jig as shown in **Figure 7.**

Documents
Document Sharing Hub
Full document details: JASO C715 2005

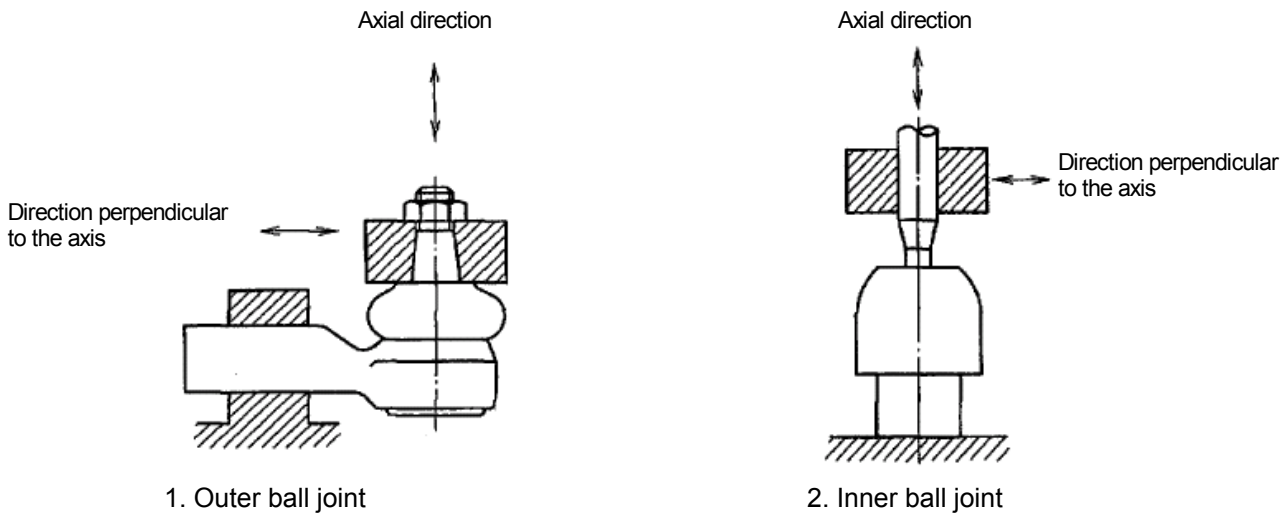

Figure 7 Conditions of ball joint mounted for rigidity test

b) Test conditions

1) Loading direction:

With the ball stud in the upright position, apply tensile and compressive loads to it in its axial direction, and in the direction perpendicular to the axial direction, up to the specified load value[(6)].

Note:[(6)]

By rule of thumb, the parties concerned in delivery shall determine the specified load. However, as an indication, set the specified load to be 1.6 times larger than the normal maximum load.

c) Test steps

1) Leave the test piece to stand for 24 h or more after assembly.

2) After loading of up to the specified load for one cycle, apply the specified load statically in both tensile and compressive directions. Then, measure the displacement in the ball stud.

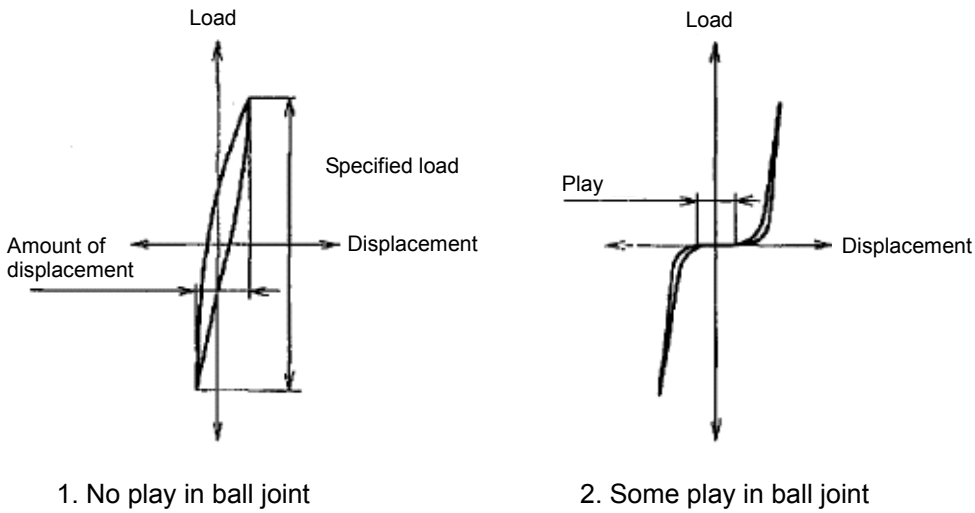

Figure 8 Load-displacement curves

d) Measurement items and records

Measure and record the following items.

Documents
Document Sharing Hub
Full document details: JASO C715 2005

1) Specified load and amount of displacement
2) Load-displacement curves (see **Figure 8**)
3) Play

6.4 Rigidity test after application of heavy load

This test shall be conducted as follows to evaluate the ball joint in terms of play that may be produced in the ball joint when a large input is applied to it.

a) Test setup

Mount the ball joint onto the jig in the same manner as in **Figure 7 of 6.3.**

b) Test conditions

1) Loading direction:

With the ball stud in the upright position, apply tensile and compressive loads to it in its axial direction, and in the direction perpendicular to the axial direction, up to the specified load value **(Note:**[6]**).**

c) Test steps

1) Leave the test piece to stand for 24 h or more after assembly.
2) After loading of up to the specified load for ten cycles, measure the load-displacement in the ball stud by the rigidity measurement test procedure.

d) Measurement items and records

Measure and record the following items.

1) Load-displacement curves during loading (see **Figure 8**)
2) Load-displacement curves (see **Figure 8**) and play after loading (measurement procedure shall comply with **6.3 Rigidity test.**)

6.5 Extrusion and drawing strength test

This test shall be conducted as follows to evaluate the ball joint in terms of breaking strength of the socket main body or at the caulked portion.

a) Test setup

Mount the ball joint onto the jig as shown in **Figure 9.**

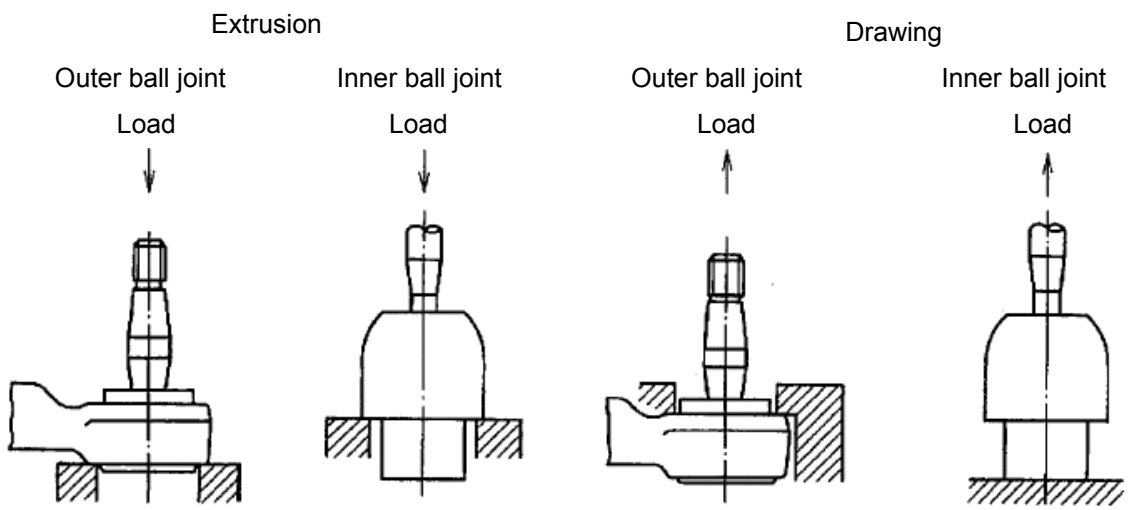

Figure 9 Conditions of ball joint mounted for extrusion and drawing strength test

b) Test conditions

1) Loading direction: Extrusion and drawing directions
2) Load: 0 to load causing breakdown (N)

Documents
Document Sharing Hub
Full document details: JASO C715 2005