JASO

Automobiles - Clock Extension Peripheral Interface (CXPI) -Part 2: Transport Protocol and Network Layer services

JASO D 015-2 : 2016

Issued 2016-3-18

Japanese Automobile Standards Organization
Society of Automotive Engineers of Japan Inc.

Documents
Document Sharing Hub

Full document details: JASO D015-2 2016

TABLE OF CONTENTS

INTRODUCTION 1
1 SCOPE 1
2 REFERENCES 1
3 TERMS AND DEFINITIONS 1
4 SYMBOLS AND ABBREVIATED TERMS 2
4.1 Symbols 2
4.2 Abbreviated Terms 2
5 NETWORK LAYER SERVICE 3
5.1 General 3
5.2 Format description of network layer services 3
5.3 Internal operation of network layer 4
5.4 Service data unit specification 4
5.5 Services provided by network layer to higher layers 6
6 TRANSPORT LAYER PROTOCOL 7
6.1 Protocol functions 7
6.2 Single frame transmission 7
6.3 Transport layer protocol data units 7
6.4 Protocol control information specification 8
6.5 Network layer timing 9
7 DATA LINK LAYER USAGE 11
7.1 Data link layer service parameters 11
7.2 Data link layer interface services 11
7.3 Mapping of the N_PDU fields 12
7.4 Transport layer PDU structure 12
8 NODE CONFIGURATION AND IDENTIFICATION 14
8.1 General 14
8.2 CXPI product identification 14
8.3 Slave node model 15
9 DIAGNOSTIC COMMUNICATION REQUIREMENTS 22
9.1 Definition of diagnostic classes 22
9.2 Diagnostic messages 23
9.3 Using the transport layer 23
9.4 Slave node diagnostic timing requirements 24
9.5 Response Pending 26
10 CXPI NODE CAPABILITY LANGUAGE (NCL) 26
10.1 General 26
10.2 Plug and play workflow concept 27
11 NODE CAPABILITY FILE (NCF) DEFINITION 28
11.1 General 28
11.2 Global structure definition 28
11.3 Node definition 28
ANNEX A (INFORMATIVE) APPLICATION METHOD OF THE SUPPLIER ID 32
A.1 Application method 32
ANNEX B (INFORMATIVE) DESCRIPTION EXAMPLE OF NODE CAPABILITY FILE 33
B.1 General 33
B.2 Global structure definition 33
B.3 Node definition 33
B.4 NCF example 38
B.5 Overview of NCF syntax 39

AVA Documents
Document Sharing Hub

Full document details: JASO D015-2 2016

FOREWORD

This standard was issued by the Standards Board, through deliberations at the Standards Committee in accordance with the Standards Board organization rules based on the bylaws of the Society of Automotive Engineers of Japan.
This standard is protected under copyright law.
Attention is drawn to the possibility that some of the elements of this technical paper may conflict with patent rights, applications for patents after opening to the public, or utility model rights. The Standards Committee of the Society of Automotive Engineers of Japan is not responsible for identifying such patent rights, applications for patents after opening to the public, and utility model rights.

There are following part in the **JASO D 015**.
JASO D 015-1 Part1：General Information and Use Cases Definition
JASO D 015-2 Part2：Transport Protocol and Network Layer Services
JASO D 015-3 Part3：Protocol Specification
JASO D 015-4 Part4：Unified diagnostic services on Clock extension peripheral interface (UDSonCXPI)
JASO D 015-5 Part5：Protocol Conformance Test Specification

Documents
Document Sharing Hub
Full document details: JASO D015-2 2016

Japanese Automobile Standard

JASO
D 015-2: 2016

Automobiles - Clock eXtension Peripheral Interface (CXPI)

-Part 2: Transport protocol and Network Layer Services

INTRODUCTION

The objective of this standard "Clock Extension Peripheral Interface" (abbreviation: CXPI) communication protocol is to define a specification which enables the arbitration without destructing even if the protocol sends the PWM (Pulse Width Modulation) waveform which is superimposed the data and clock on communication bus and also multiple peripherals send the UART (Universal Asynchronous Receiver Transmitter) at the same time.

1 SCOPE

The standard defines the transport protocol and network layer services tailored to meet "the method 1" event trigger method of CXPI communication protocol for Automobiles - CXPI communication protocol for mainly HMI (Human Machine Interface) of road vehicles electric system.

2 REFERENCES

The following standards contain sections which, through reference in this text, constitute sections of this standard. For dated references, it shall apply the version but not the revised version (including the supplemental version). For the undated references, the latest edition of the normative document referred to applies (including the supplemental version).

JIS X 0001: 1994 Glossary of terms used in information processing - Fundamental terms
JIS X 0005: 2002 Glossary of terms used in information processing (Representation of data)
JIS X 0009: 1997 Glossary of terms used in information processing (Data communication)
JIS X 0025: 1994 Glossary of terms used in information processing (Local area networks)
JIS X 0026: 1995 Glossary of terms used in information processing (Open Systems Interconnection)
ISO 15765-2, Road vehicles－Diagnostic communication over Controller Area Network (DoCAN) －Part2： Transport protocol and network layer services
ISO 14229-1:2013, Road vehicles - Unified diagnostic services (UDS) - Part 1: Specification and requirements
ISO 14229-2:2012, Road vehicles - Unified diagnostic services (UDS) - Part 2: Session layer services
JASO D 015-3:2015, Road vehicles - Clock Extension Peripheral Interface (CXPI) - Part3: Protocol specification
JASO D 015-4:2015, Road vehicles - Clock Extension Peripheral Interface (CXPI) - Part4: Unified Diagnostic Services on Clock eXtension Peripheral Interface (UDSonCXPI)

3 TERMS AND DEFINITIONS

For the purposes of this standard, the following terms and definitions, other than those given in **JIS X 0001**, **JIS X 0005**, **JIS X 0009**, **JIS X 0025** and **JIS X 0026** apply.

3.1
Broadcast NAD
(0x7F) Any slave node receiving a message with a NAD equal to the broadcast NAD, the message will be received and processed. The broadcast NAD is used during node configuration.

Documents
Document Sharing Hub

Full document details: JASO D015-2 2016

3.2
Configured NAD
Each of the slave nodes requires a unique Configured NAD which is used for node configuration and identification services as well as UDS services.

a) The master node can assign new Configured NADs to slave nodes supporting the "Assign NAD" service. The Configured NAD is in the range [0x01 – 0x7D].

b) The configured NAD is assigned with a static configuration.

3.3
Functional NAD
(0x7F) Used to broadcast diagnostic requests.

3.4
Initial NAD
Each of the slave nodes has an Initial NAD. The combination of Initial NAD, Suppler ID and Function ID has to be unique in a CXPI cluster. The Initial NAD value is constant/static and may be derived before entering the operational state (regular CXPI communication) from a pin configuration, EEPROM or slave node position detection algorithms. The Initial NAD is used to assign a unique configured NAD. If no initial NAD is defined for a slave node (NCF) the value is identical to the configured NAD. The Initial NAD is in the range of [0x01 – 0x7D].

3.5
CXPI cluster
Consists of CXPI bus and all nodes of a CXPI network.

3.6
Server
Function that is part of an electronic control unit and that provides the diagnostic services.

3.7
Client
Function that is part of the tester and that makes use of the diagnostic services.

3.8
CXPI data field
CXPI frame consists of the PID field, frame information, data and CRC. The data are defined as CXPI data field.

4 SYMBOLS AND ABBREVIATED TERMS

4.1 Symbols

ms	millisecond

4.2 Abbreviated Terms

API	Application Programming Interface
BNF	Bachus-Naur Format
L_Data	data Link Data
MRF	Master Request Frame
N_AI	Network Address Information
N_As	Network layer timing parameter As
N_As_{max}	Network layer timing parameter As max
NAD	Node ADdress for slave nodes
NCF	Node Capability File

Documents
Document Sharing Hub
Full document details: JASO D015-2 2016

NCL	Node Capability Language
N_Data	Network Data
N_NAD	Network Node ADdress for slave nodes
N_PCI	Network Protocol Control Information
N_PCItype	Network Protocol Control Information type
N_PDU	Network Protocol Data Unit
N_SDU	Network Service Data Unit
N_TAtype	Network Target Address type
N_USData	Network layer Unacknowledged Segmented Data transfer service name
NRC	Negative Response Code
NWL	NetWork Layer
OBD	On-Board Diagnostics
OSI	Open Systems Interconnection
PDU	Protocol Data Unit
PID	Protected ID
RSID	Response Service IDentifier
SF	SingleFrame
SID	Service ID
SRF	Slave Response Frame

5 NETWORK LAYER SERVICE

5.1 General

This part specifies an unconfirmed network layer communication protocol for the exchange of data between network nodes, e.g. from ECU to ECU or between external test equipment and an ECU.
In order to describe the function of the network layer, services provided to higher layers and the internal operation of the network layer shall be considered.
All network layer services have the same general structure. To define the services, three types of service primitives are specified:

a) **a service request primitive**, used by higher communication layers or the application to pass control information and data required to be transmitted to the network layer;

b) **a service indication primitive**, used by the network layer to pass status information and received data to upper communication layers or the application;

c) **a service confirmation primitive**, used by the network layer to pass status information to higher communication layers or the application.

This service specification does not specify an application programming interface, but only a set of service primitives that are independent of any implementation.

5.2 Format description of network layer services

All network layer services have the same general format. Service primitives are written in the form:

```
service_name.type    (
                     parameter A,
                     parameter B
                     [,parameter C, ...]
                     )
```

where "service_name" is the name of the service, e.g. N_USData, "type" indicates the type of the service primitive, and "parameter A, parameter B [,parameter C, ...]" are the N_SDU as a list of values passed by the service primitive. The brackets indicate that this part of the parameter list may be empty.

AVA Documents
Document Sharing Hub
Full document details: JASO D015-2 2016

The service primitives define how a service user (e.g. diagnostic application) cooperates with a service provider (e.g. network layer). The following service primitives are specified in this International Standard: request, indication and confirm.

a) **Using the service primitive request (service_name.request)**, a service user requests a service from the service provider.

b) **Using the service primitive indication (service_name.indication)**, the service provider informs a service user about an internal event of the network layer or the service request of a peer protocol layer entity service user.

c) **With the service primitive confirm (service_name.confirm)**, the service provider informs the service user about the result of a preceding service request of the service user.

5.3 Internal operation of network layer

The main purpose of the network layer is to transfer messages that fit in a single CXPI frame.

Figure 1 shows an example of an unsegmented message transmission.

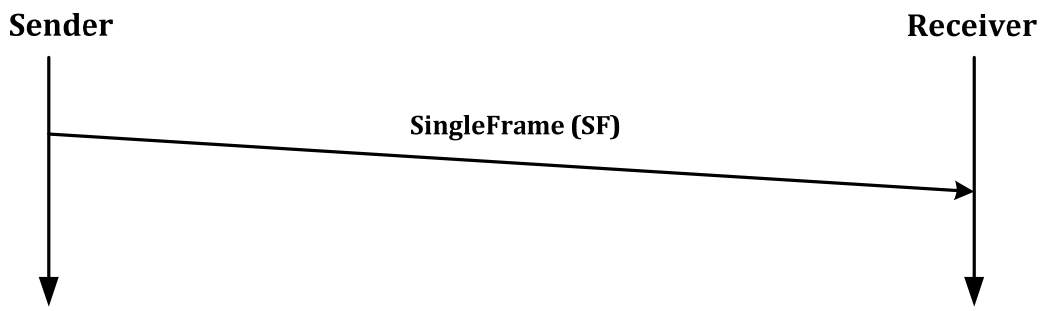

Figure 1 - Example of an unsegmented message

5.4 Service data unit specification

5.4.1 General

In the following subclauses all network layer service parameters are described which are used by the CXPI network layer services.

5.4.2 N_AI

5.4.2.1 N_AI description

The N_AI is used to identify the communicating peer entities of the network layer. For request messages the N_AI consists of a CXPI master node request identifier and a N_NAD. For response messages the N_AI consists of a CXPI slave node response identifier and a N_NAD.

ID 0x1F (Master Request Frame: MRF) is assigned to the message transmissions sent by the master node.

ID 0x5F (Slave Response Frame: SRF) is assigned to the message transmissions sent by any slave node.

Additionally a N_NAD comprises the slave node addressed by the request/response and also the addressing type (physical, functional).
These parameters refer to addressing information. As a whole, the N_AI parameters are used to identify the message senders and recipients as well as the communication model for the message (N_TAtype).

5.4.2.2 N_NAD, Network NAD

Type:1 byte unsigned integer value
Range:0x00 – 0xFF

Documents
Document Sharing Hub
Full document details: JASO D015-2 2016

Description:Two communication models are specified:

a) 1 to 1 communication, called physical addressing, and

b) 1 to n communication called functional addressing.

Depending on the N_NAD value the communication model is given, **Table 1** shows the N_NAD values.

Table 1 - N_NAD values

N_NAD value	Description
0x00	Sleep frame (see **JASO D 015-3**)
0x01 – 0x7D	Physical addressing type for diagnostic communication
0x7E	Functional addressing type for diagnostic communication
0x7F	Broadcast addressing type
0x80 – 0xFF	Reserved

Physical addressing shall only be supported for SingleFrame communication. Responses on requests are expected. The N_NAD value shall always be validated against the configured NAD in a slave node.
Functional addressing shall only be supported for SingleFrame communication. The master node is the only node transmitting functional messages.
Broadcast addressing shall be used for node configuration. It shall not be used for diagnostic communication.

5.4.3 <DataLength>
Type:8 bits
Range:0x01 - 0xFF
Description:This parameter includes the length of data to be transmitted / received.

5.4.4 <MessageData>
Type:string of bytes
Range:not applicable
Description:This parameter includes all data the higher layer entities exchange.

5.4.5 <N_Result>
Type:enumeration
Range:N_OK, N_TIMEOUT_As, N_UNEXP_PDU, N_ERROR, N_UNEXP_NEW_REQ
Description: This parameter contains the status relating to the outcome of a service execution. If two or more errors are discovered at the same time, then the network layer entity shall use the parameter value first found in this list in the error indication to the higher layers.

a) N_OK

This value means that the service execution has completed successfully; it can be issued to a service user on both the sender and receiver side.

b) N_TIMEOUT_As

This value is issued to the protocol user when the timer N_As has passed its timeout value N_As_{max}; it can be issued to service user on the sender side.

c) N_UNEXP_PDU

This value is issued to the service user upon reception of an unexpected protocol data unit; it can be issued to the service user on the receiver or transmitter side.

d) N_ERROR

Documents
Document Sharing Hub
Full document details: JASO D015-2 2016

This is the general error value. It shall be issued to the service user when an error has been detected by the network layer and no other parameter value can be used to better describe the error. It can be issued to the service user on both the sender and receiver side.

e) N_UNEXP_NEW_REQ

This value is issued;

1) to the lower priority service instances with an active diagnostic communication as parameter of N_USData.indication upon service call of a new higher priority call of N_USData.request,

2) when a N_USData.request can't be accepted due to a currently active diagnostic communication with a higher priority,

3) this value is issued to the service user upon service call of a new N_USData.request with the same priority.

5.5 Services provided by network layer to higher layers

5.5.1 General

The service interface defines a set of services that are needed to access the functions offered by the network layer, i.e. transmission/reception of data and setting of protocol parameters.
The communication services, of which the following are defined, enable the transfer of up to 252 bytes of data.

a) N_USData.request
This service is used to request the transfer of data.

b) N_USData.indication
This service is used to provide received data to the higher layers.

c) N_USData.confirm
This service confirms to the higher layers that the requested service has been carried out (successfully or not).

5.5.2 Specification of network layer service primitive

5.5.2.1 N_USData.request

The service primitive requests transmission of <MessageData> with <DataLength> bytes from the sender to the receiver peer entities identified by the address information in N_NAD (see **5.4.2.2** for parameter definition) and N_TAtype.
Each time the N_USData.request service is called, the network layer shall signal the completion (or failure) of the message transmission to the service user by means of the issuing of an N_USData.confirm service call:

```
N_USData.request    (
                        N_NAD
                        N_TAtype
                        <MessageData>
                        <DataLength>
                        )
```

5.5.2.2 N_USData.confirm

The N_USData.confirm service is issued by the network layer. The service primitive confirms the completion of an N_USData.request service identified by the address information in N_TAtype. The parameter <N_Result> provides the status of the service request (see **5.4.5** for parameter definition).

```
N_USData.confirm    (
                        N_TAtype
                        <N_Result>
                        )
```

5.5.2.3 N_USData.indication

The N_USData.indication service is issued by the network layer. The service primitive delivers <MessageData> with <DataLength> bytes received from a peer protocol entity identified by the address information in N_TAtype to the adjacent upper layer (see **5.4.2.2** for parameter definition).

AVA Documents
Document Sharing Hub
Full document details: JASO D015-2 2016

```
N_USData.indication(
                    N_NAD
                    N_TAtype
                    <MessageData>
                    <DataLength>
                    )
```

The N_USData.indication service call is issued after the reception of a SingleFrame (SF) message.
If the network layer detects any type of error in a SingleFrame (SF), then the message shall be ignored by the network layer and no N_USData.indication shall be issued to the adjacent upper layer.

6 TRANSPORT LAYER PROTOCOL

6.1 Protocol functions

The transport layer protocol performs the following functions:

a) transmission/reception of messages up to 255 data bytes;

b) reporting of transmission/reception completion (or failure).

6.2 Single frame transmission

Figure 2 shows the transmission of a normal frame, which consists of Byte 1 = N_AI (N_NAD), Byte 2 = N_PCI and Byte 3 - Byte 12 = N_Data (N_Data is variable) or a long frame, which consists of Byte 1 = N_AI (N_NAD), Byte 2 ... Byte3 = N_PCI and Byte 4 - Byte 255 = N_Data (N_Data is variable). For the actual message payloads of a SF (see **6.3.2** and see also **7.3**), normal frame is 1 ... 10 data bytes, long frame is 11 - 252 data bytes.

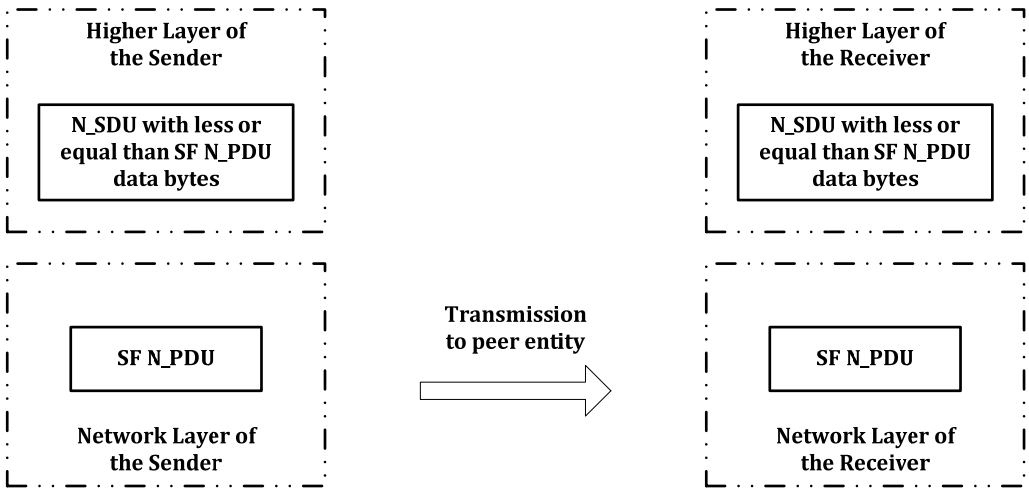

Figure 2 - Example of a SingleFrame (SF) transmission

6.3 Transport layer protocol data units

6.3.1 Protocol data unit types

The communication between the peer protocol entities of the network layer in different nodes is done by means of exchanging N_PDUs.
6.3 specifies one type of transport layer protocol data units

Documents
Document Sharing Hub
Full document details: JASO D015-2 2016

SingleFrame (SF N_PDU), which is used to establish a communication path between the peer network layer entities, to exchange communication parameters, to transmit user data and to release communication resources.

6.3.2 SF N_PDU

The SF N_PDU is identified by the SingleFrame protocol control information (SF N_PCI). The SF N_PDU shall be sent out by the sending network entity and received by all network entities. Only the one entity that is addressed by the N_AI shall process this request for the duration of the message transmission. Other nodes which are not addressed have to reject already pending connections. The SF N_PDU shall be sent out to transfer an unsegmented single service request to the data link layer.

6.3.3 Protocol data unit field description

6.3.3.1 N_PDU format

The protocol data unit (N_PDU) enables the transfer of data between the network layer in one node and the network layer in one or more other nodes (peer protocol entities). All N_PDUs consist of three fields, as specified in **Table 2**.

Table 2 - N_PDU format

Address information	Protocol control information	Data field
N_AI	N_PCI	N_Data

6.3.3.2 Address information (N_AI)

The N_AI is used to identify the communicating peer entities of the network layer. The N_AI information received in the N_SDU - N_NAD - shall be copied and included in the N_PDU. N_AI and N_NAD use same values.
This field contains address information that identifies the type of message exchanged and the recipient(s) and sender between whom data exchange takes place.
NOTE For a detailed description of address information, see **5.4.2**.

6.3.3.3 Protocol control information (N_PCI)

This field identifies the type of N_PDUs exchanged. It is also used to exchange other control parameters between the communicating network layer entities.
NOTE For a detailed specification of all N_PCI parameters, see **6.4**.

6.3.3.4 Data field (N_Data)

The N_Data in the N_PDU is used to transmit the service user data received in the <MessageData> parameter in the N_USData.request service call.
The size of N_Data differs between normal frame and long frame.

6.4 Protocol control information specification

6.4.1 N_PCI

Each N_PDU is identified by means of an N_PCI, see **Table 3** and **Table 4**.

Table 3 - Summary of N_PCI bytes

N_PDU name	N_PCI bytes		
	Byte #1		Byte #2
	Bits 7 – 4	Bits 3 – 0	Bits 7 – 0
SF – Normal frame	N_PCItype = 0000b	SF_DL	N/A
SF – Long frame	N_PCItype = 0000b	0000b	SF_DL

Documents
Document Sharing Hub
Full document details: JASO D015-2 2016

Table 4 - Definition of N_PCItype values

Value	Description
0x0	**SingleFrame (SF)** For unsegmented messages, the network layer protocol provides an optimized implementation of the network protocol with the message length embedded in the N_PCI byte only. SF shall be used to support the transmission of messages that can fit in a single CXPI frame.
0x1 – 0xF	**Reserved** This range of values is reserved.

6.4.2 SingleFrame N_PCI parameter definition

6.4.2.1 SF N_PCI bytes

Table 5 provides an overview of the SF N_PCI bytes.

Table 5 - Overview of SF N_PCI bytes

N_PDU name	SF N_PCI bytes								
	Byte #1								Byte #2
	7	6	5	4	3	2	1	0	Bits 7 – 0
SF – Normal frame	0	0	0	0	SF_DL				N/A
SF – Long frame	0	0	0	0	0	0	0	0	SF_DL

6.4.2.2 SingleFrame_DataLength (SF_DL) parameter definition

The parameter SingleFrame Data Length (SF_DL) is used in the SF N_PDU to specify the number of service user data bytes. See **Table 6**. Value of SF_DL is equal to length of N_Data. Therefore, it does not need any byte padding.

Table 6 - Definition of SF_DL values

Value	Description
0x00	**Invalid** This range of values is invalid. If the low nibble of N_PCI byte #1 value is 0000b, it shall be assigned the value of the service parameter <DataLength> in the 8 bits of N_PCI byte #2 value.
0x01 – 0x0A	**SingleFrame_DataLength (SF_DL) normal frame** The SF_DL of normal frame is encoded in the low nibble of N_PCI byte #1 value. It shall be assigned the value of the service parameter <DataLength>.
0x0B – 0xFC	**SingleFrame_DataLength (SF_DL) long frame** The SF_DL of long frame is encoded in the 8 bits of N_PCI byte #2 value. It shall be assigned the value of the service parameter <DataLength>.
0xFD – 0xFF	**Invalid** This range of values is invalid.

6.5 Network layer timing

6.5.1 Timing constraints

The timing constraints for the transport layer are defined in **Table 7**. The properties shall be within a defined range. Since CXPI is slower than CAN, the values have to be adjusted accordingly. The recommended baud rate is greater than 9.6 kbps. These properties are part of the transport layer and will not have any constraint on the node configuration.

Documents
Document Sharing Hub
Full document details: JASO D015-2 2016

Performance requirement values are the binding communication requirements to be met by each communication peer in order to be compliant with the specification. Since the CXPI schedules vary with the specific use case a certain application may define specific performance requirements within the ranges defined in **Table 7**.

Timeout values are defined to be higher than the values for the performance requirements to ensure a working system and to overcome communication conditions where the performance requirement can absolutely not be met (e.g. high bus load). Specified timeout values in **Table 7** or values given by the node (i.e. the NCF) shall be treated as the upper limit for any given implementation.

The network layer shall issue an appropriate service primitive to the network layer service user upon detection of an error condition.

If a communication path is established between peer protocol entities identified by N_AI (see **5.4.2** and **6.3.3.2** for further details), a single set of network layer timing parameters is assigned statically to this communication path.

Table 7 - Network layer timing parameter definition

Timing parameter	Description	Data CXPI layer service		Timeout	Performance requirement ms
		Start	End	ms	
N_As	Time for transmission of the CXPI frame (MRF or SRF) on the transmitter side	When the transport layer requests a diag-nostic frame to be transmitted	When the diagnostic frame has been confirmed as transmitted	1 000	N/A

Figure 3 shows the network layer timing parameters of an un-segmented message, while **Table 7** defines the network layer timing parameter values and their corresponding start and end positions based on the data CXPI layer services.

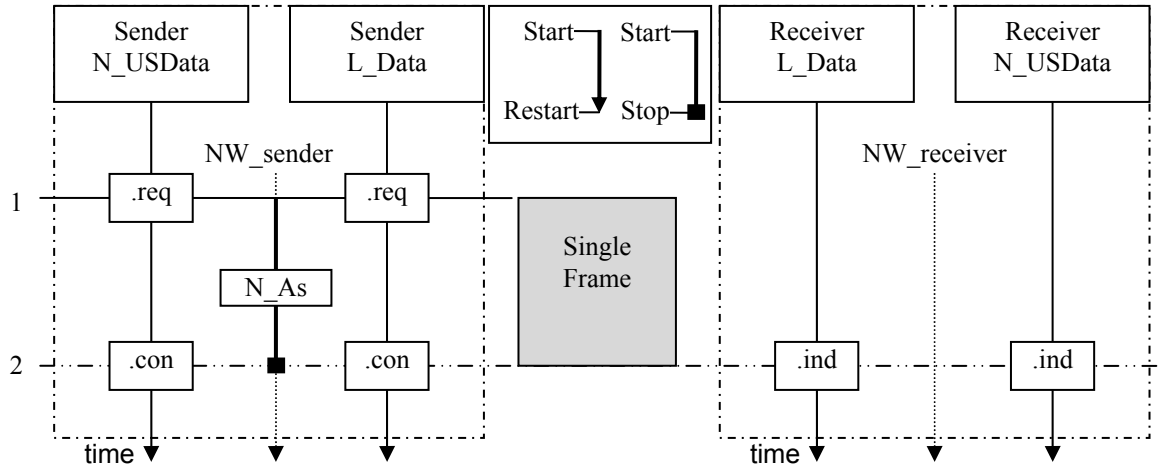

Note 1 Sender N_USData.req: the session layer issues an un-segmented message to the transport/network layer.

Sender L_Data.req: the transport/network layer transmits the SingleFrame to the data CXPI layer and starts the N_As timer. This diagram shows the timing relationship between the data CXPI and the transport layers and does not imply actual bus message scheduling.

Note 2 Receiver L_Data.ind: the data link layer issues to the transport/network layer the reception of the CXPI frame.

Receiver N_USData.ind: the transport/network layer issues to the session layer the completion of the un-segmented massage.

Sender L_Data.con: the data link layer confirms to the transport/network layer that the CXPI frame has been transmitted successfully. The sender stops the N_As timer.

Sender N_USData.con: the transport/network layer issues to the session layer the completion of the un-segmented message.

Figure 3 - Placement of network layer timing parameters

Figure 4 illustrates the parameters in the time domain. The intention of the figure is to show the transport layer timing parameters, not to require a certain implementation. The behaviour for the master node and the slave node in the lower layers are generalized.

Documents
Document Sharing Hub
Full document details: JASO D015-2 2016