Automotive parts - Test methods and general performance requirements for wiring harness connectors

1. Scope

This standard specifies the general required performance and test methods of the single pole and multi-pole connectors for automotive wiring harnesses. This standard applies to the connectors removable for the repair and/or the maintenance after wiring harnesses are installed in the automobile. This standard does not apply to the connectors installed to wiring boards, or to the joint connectors inside electronic devices.

2. Normative reference

The following standards, when referred to in this standard, constitute a part of the specifications of this standard. As required, the most recently updated version of the applicable standard (including addenda) shall be applied.

JASO D605	Electric connector for automobiles
JASO D611	Automotive parts – Unscreened low-voltage cables
JASO D620	Automotive parts – Copper alloy strips for electric and electronic connectors
JASO D805	Automobile parts – Glossary of terms relating to electrical,electronic and optical connectors
JIS C3406	Low-voltage cables for automobiles
JIS C60068-2-27	Environmental testing – Part2 – 27 －Tests – Test Ea: Shock
JIS D0207	General rules of dust test for automobile parts
JIS Z2371	Methods of salt spray testing
ISO 6722	Road vehicles – 60V and 600V single core cables – Dimensions, test methods and requirements

3. Definitions

Definitions of main terms used in this standard shall be based on **JASO D805** and as follows.

3.1 Connector repeated mating/unmating test

A test to check the durability performance by repeated mating and unmating of a connector in consideration of inspection, mounting and dismounting of accessories, or other operations after installation in the automobile.

3.2 High water jet test

A test to check for water ingress into a connector when water splashed during driving or the vehicle is washed.

3.3 Combined environmental test

A test to check the effect of repeated current application and pause on mated connectors while changing the temperature and humidity environment as well as applying vibrating.

AVA Documents
Document Sharing Hub

Full document details: JASO D616 2011

3.4 Current cycling test

A test to check the effect of repeated current application and pause on mated connectors in a high temperature environment.

3.5 Temperature and humidity cycling test

A test to check the effect of changes in the temperature and humidity environment and their repetition on mated connectors.

4. Relationship between required performance items and test items

The relationship between the required performance items and the test items is shown in **Table 1**.

Table 1 Relationship between required performance items and test items

Required performance			Test														
Performance item				Durability characteristics													
	Required performance item	Test method item	Initial characteristics	Connector repeated mating/unmating test	Thermal ageing test	High-pressure water jet test	Combined temperature/vibration test	Salt spray test	Current cycling test	Impact resistance test	Thermal shock test	Temperature and humidity cycling test	Drop impact test	Dust test	Chemical fluids test	Flowing gas corrosion test
				6.16	**6.17**	**6.18**	**6.19**	**6.20**	**6.21**	**6.22**	**6.23**	**6.24**	**6.25**	**6.26**	**6.27**	**6.28**
Visual examination	**5.1**	**6.2**	×	×	×	○	To be determined by consultation between the parties concerned	○	To be determined by consultation between the parties concerned	×	×	×	×	×	To be determined by consultation between the parties concerned	To be determined by consultation between the parties concerned
Connector mating force and unmating force	**5.2**	**6.3**	×	×	×	–		–		–	–	×	–	–		
Tensile strength for crimped connection	**5.3**	**6.4**	×	–	×	–		–		–	×	–	–	–		
Housing lock strength	**5.4**	**6.5**	×	–	×	–		–		–	×	×	–	–		
Terminal insertion force	**5.5**	**6.6**	×	–	–	–		–		–	–	–	–	–		
Terminal retention in housing	**5.6**	**6.7**	×	–	×	–		○		–	×	×	–	–		
Connection resistance (voltage drop)	**5.7**	**6.8**	×	×	×	–		○		–	×	×	–	×		
Leakage current	**5.8**	**6.9**	–	–	–	–		○		–	–	×	–	–		
Sealing ability	**5.9**	**6.10**	○	○	○	–		–		–	○	○	–	–		
Insulation resistance	**5.10**	**6.11**	×	–	–	○		○		–	–	×	–	–		
Withstand voltage	**5.11**	**6.12**	×	–	–	○		○		–	–	×	–	–		
Temperature rise	**5.12**	**6.13**	×	×	×	–		–		–	–	–	–	–		
Circuit continuity monitoring	**5.13**	**6.14**	–	–	–	–		–		×	–	–	–	–		
Resistance fluctuation monitor	**5.14**	**6.15**	–	–	–	–		–		–	×	×	–	–		

"X" is applied to non-waterproof connectors and waterproof connectors. "○" is applied only to waterproof connectors.
The numerals written vertically in each item of the durability characteristics indicate the test method item number of the applicable test.

Documents
Document Sharing Hub
Full document details: JASO D616 2011

5. Required performance

For each item of the required performance, the specified test shall be performed respectively, and the results shall conform to the relevant required performance. For each durability test, the initial characteristics shall be evaluated before the test, the performance of the location with a mark added shall be evaluated after the test, and the specified required performance shall be satisfied respectively. However, the leakage current, momentary shut-off monitor, and resistance fluctuation monitor shall be evaluated during the test instead of before and after the test.

5.1 Visual examination

No harmful crack, discoloration, or deformation shall exist. In addition, for waterproof connectors, no water ingress shall occur.

5.2 Connector mating force and unmating force

The matingforce and unmating force shall conform to the required performance determined between the parties concerned.

5.3 Tensile strength for crimped connections

The tensile strength of the conductor crimp shall be equal to or more than the minimum tensile strength specified in **Table 2**. However, if the required performance determined between the parties concerned is satisfied, it shall be considered acceptable.

Table 2 Minimum tensile strength of conductor crimps

Nominal cross-sectional area of cable mm^2	Minimum tensile strength N
0.13	50 [a)]
0.22	33
0.3	60 [a)]
0.35	50
0.5	90
0.75	117
0.85	130
1	140
1.25	180
1.5	200
2	270
3	300
5	490
8	784
10	981
Note:[a)] The high tensile strength depends on the specification of the cable.	

5.4 Housing lock strength

The strength shall be 100 N or more.

5.5 Terminal insertion force

When a cable of which the nominal cross-sectional area is up to 1 mm^2 is crimped, the insertion force shall be 15 N or less. When the nominal cross-sectional area exceeds 1 mm^2, the insertion force shall be 30 N or less. For waterproof connectors, the insertion force including wire seal shall be adopted.

AVA Documents
Document Sharing Hub
Full document details: JASO D616 2011

5.6 Terminal retention in housing

The terminal retention force shall be 100 N or more. When the tensile strength of conductor crimp is less than 100 N, the holding force shall be equal to or more than the tensile strength of conductor crimp.

5.7 Connection resistance (voltage drop)

For the male tab width of 1.8 mm or less, the connection resistance shall be 10 mΩ or less at initial stage and 30 mΩ or less after durability test. For the male tab width exceeding 1.8 mm, the connection resistance shall be 5 mΩ or less at initial stage and 10 mΩ or less after durability test.

5.8 Leakage current

The leakage current shall not exceed the following values.

Non-waterproof connector: 1 mA

Waterproof connector: 50 μA

5.9 Sealing ability

For both the internal pressure application test and external pressure application test, bubble formation shall occur at 50 kPa or more.

5.10 Insulation resistance

The insulation resistance shall be 100 MΩ or more.

5.11 Withstand voltage

Neither dielectric breakdown nor flashover shall occur.

5.12 Temperature rise

When the material of female terminal is brass, 40°C shall not be exceeded, and when the material is copper alloy specified in **JASO D620**, 60°C shall not be exceeded.

5.13 Circuit continuity monitoring

Resistance fluctuation of 7 Ω or more and for 1 μs or more shall not occur. (Refer to **Figure 1**.)

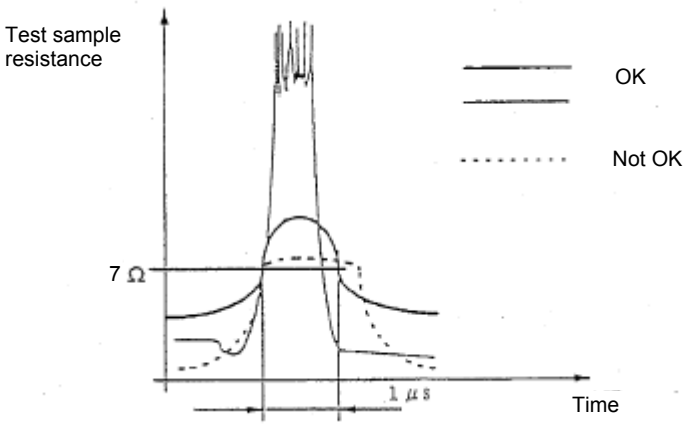

Figure 1 Circuit continuity monitoring waveform (example)

5.14 Resistance fluctuation monitor

The fluctuation rate shall be 500% or less. However, the fluctuation of cable resistance caused by environmental change shall be excluded.

Documents
Document Sharing Hub
Full document details: JASO D616 2011

6. Test method

6.1 General

6.1.1 Preconditioning

As the pre-test conditions, test samples shall be held at temperature of (20±15)°C and relative humidity of 45 to 85 %RH for 24 hours.

6.1.2 Test conditions

Unless otherwise specified, all the tests shall be performed with the connectors mated at temperature of (20±15)°C.

Test samples shall be manufactured with unused tabs and housings in accordance with the dimensions specified in **5.1** (Tab shape and dimension) of **JASO D605** or in **Figure 2**. A housing provided with a locking device shall be combined with an appropriate mating part with which locking is possible.

Cables shall conform to **ISO 6722**, **JIS C3406**, or **JASO D611**.

Care shall be taken not to allow the test samples to affect each other in a heating chamber, for example.

Unit: mm

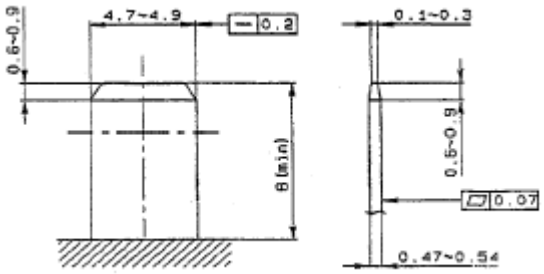

Figure 2 Additional tab shape and dimension

Documents
Document Sharing Hub
Full document details: JASO D616 2011

6.1.3 Number of test samples

The number of test samples for acceptance/rejection judgement shall be in accordance with **Table 3**.

Table 3 Number of test samples

Requirements	Minimum number of test samples[a)]
Visual examination	5
Connector mating force and unmating force	5
Tensile strength for crimped connection	20
Housing lock strength	5
Terminal insertion force	20 [b)]
Terminal retention in housing	20 [b)]
Connection resistance (voltage drop)	20 [b)]
Leakage current	5
Sealing ability	5
Insulation resistance	5
Withstand voltage	5
Temperature rise	5
Circuit continuity monitoring	5
Resistance fluctuation monitor	5

Note:[a)]
In the case of tensile strength of the conductor crimp, terminal insertion force, terminal holding force, and conntection resistance (voltage drop), the number of samples denotes the number of terminals. In the other cases, the number of samples denotes the number of connectors.
Note:[b)]
According to the number of poles of connector, the number of samples shall be the following.
– Single pole connector: 20 connectors
– Two-pole connector: 10 connectors
– Three-pole connector: 7 connectors
– Four poles or more: 5 connectors

6.2 Visual examination

For the visual examination, check visually the required performance from an appropriate distance and in a proper light.

6.3 Connector mating force and unmating force

For the connector mating force and unmating force, perform mating/unmating operations at a constant speed between 25 and 100 mm/min, and measure the load at that time. The unmating force shall be measured when the housing lock remains released.

6.4 Tensile strength for crimped connections

For the tensile strength for crimped connections, fix the terminal, pull the cable at a constant speed between 25 and 100 mm/min, and measure the load when rupture occurs. Unless otherwise specified, insulator crimping portions shall be removed from the test samples.

When two cables or more are crimped, use different samples respectively. Pull each cable at a constant speed between 25 and 100 mm/min, and measure the load when rupture occurs.

AVA Documents
Document Sharing Hub
Full document details: JASO D616 2011

6.5 Housing lock strength

For the housing lock strength, to avoid the effect of terminal disengagement force, insert the terminal with a cable crimped only to the tensile side, apply the housing lock, and install the connector, which is on the side where the terminal is not inserted, to the fixture. Then, pull the other side in the five directions as shown in **Figure 3** at a constant speed between 25 and 100 mm/min, and measure the load when the housing lock is unmated or damaged. The fixture shall securely fix the housing. During measurement, no deformation shall be caused to the male and female housings by the fixture.

Depending on the connector type, the test temperature may be changed by consultation between the parties concerned.

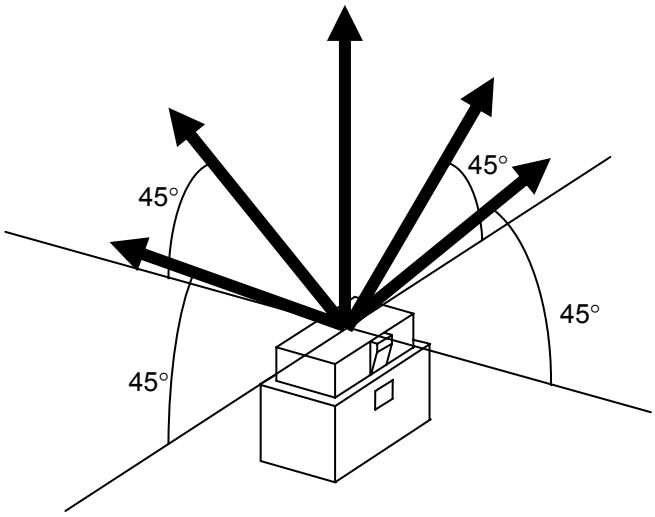

Figure 3 Connector tensile direction

6.6 Terminal insertion force

For the terminal insertion force, measure the insertion load up to the normal housing position of the terminal with a cable crimped. Take care not to cause buckling of the cable, and perform measurement at a constant speed between 25 and 100 mm/min.

For waterproof connectors, perform measurement using a cable with the maximum diameter which is applicable to the wire seal. For non-waterproof connectors, the cable diameter is not specified.

6.7 Terminal retention in housing

For the terminal retention in housing force, insert a terminal with a cable crimped up to the normal housing position. Then, pull it at a constant speed between 25 and 100 mm/min, and measure the load when the terminal latch portion, terminal crimping portion, or the cable is damaged or ruptured.

Note that the terminal shall be completely latched while the measurement is performed. In addition, depending on the connector type, the test temperature may be changed by consultation between the parties concerned.

6.8 Connection resistance (voltage drop)

The connection resistance shall be obtained by subtracting the conductor resistance between the measurement point and the measurement reference point from the value obtained between the measurement points. Set the measurement point as closely as possible to the measurement reference point. (Refer to **Figure 4** or **Figure 5**.)

Perform measurement by the following methods considering the current application conditions.

Documents
Document Sharing Hub
Full document details: JASO D616 2011