Durability testing methods for automotive electronic equipment

1. Scope

This standard stipulates the standardized testing methods for evaluating the durability of automotive electronic equipment (hereinafter referred to as "equipment") used with 12-V or 24-V nominal voltage power supplies under specific ambient conditions.

Remark The following standards are quoted in this standard.

JIS C 1102: Direct acting indicating analogue electrical measuring instruments, and their accessories

JIS D 1601: Vibration testing methods for automobile parts

JIS Z 8703: Standard atmospheric conditions for testing

JASO D 001: General rules of environmental testing methods for automotive electronic equipment

2. Definitions

The definitions of the main terms used in this standard are listed below.

(1) **Automotive electronic equipment:** The general term for automotive components with a structure or configuration allowing mounting on a motor vehicle, including electronic sensors, control units (or computers), displays, and audio/visual systems.

(2) **Transient voltage:** A transient voltage occurring in the power supply circuit to an electrical device before conditions return to normal after a fluctuation has occurred in the electrical circuits incorporating the device, or a voltage occurring in a device's electrical circuits due to connection or induction caused by high-tension cables.

3. Test categories

Testing is categorized as shown in **Table 1**.

Table 1: Test categories

Test category	Test item number
Transient voltage endurance test	**5.1**
Thermal shock endurance test	**5.2**
High-temperature high-humidity electrical test	**5.3**
Vibration endurance test	**5.4**

4. General conditions

4.1 Test location conditions

Unless otherwise specified, the ambient conditions of the test location are to be constant at 20°C ±15°C and 65% ±20% humidity, as stipulated in **JIS Z 8703.**

4.2 Test apparatus

Unless otherwise specified, test apparatuses are to be as follows.

(1) **Ammeter:** An instrument with accuracy of class 0.5 or better, as stipulated in **4.1 (Tolerances)** in **JIS C 1102.**

(2) Voltmeter: An instrument with accuracy of class 0.5 or better, as stipulated in **4.1 (Tolerances)** in **JIS C 1102.**

(3) **Power supply unit:** A unit that provides a stable DC power supply (a battery or unit with low impedance similar to a

AVA Documents Document Sharing Hub
Full document details: JASO D902 1995

battery), may be varied from 8 V to 38 V, and for which supply voltage fluctuations due to equipment operation do not exceed ±0.3 V.

(4) **Input device:** A signal generator for the test component, such as sensors used in the vehicle, or a device with similar characteristics.

(5) **Load device:** A passive device for the test component, such as actuators used in the vehicle, or a device with similar characteristics.

Dummy devices may be used if they have no direct effects on the test results.

4.3 Test components

Test components are to be devices adjusted as specified in the specifications manual, and are to be tested beforehand as described in **4.5**.

Test components are to be those agreed upon by the delivery supervisors.

4.4 Test voltage and sustention

Unless otherwise specified, the test voltage is to be 14 V (for a 12-V system) or 28 V (for a 24-V system).

The test voltage is to be monitored and sustained correctly using a voltmeter, as stipulated in **4.2 (2)**.

4.5 Normal power supply voltage test

The voltage is to be applied after connecting the power supply unit, input device, and load device to the test component, and the equipment characteristics are to be recorded for at least three different voltages in a range from 10 V to 16 V (for a 12-V system) or 20 V to 32 V (for a 24-V system), including the maximum and minimum for the applicable range.

5. Test method

5.1 Transient voltage endurance test

5.1.1 Objectives

To evaluate durability against transient voltages generated by the operation of other electrical or electronic devices mounted in the vehicle.

5.1.2 Test apparatus

Includes equipment to generate the transient voltage stipulated in **Table 2** (see **Figure 2**), power supply unit, and input and load devices.

5.1.3 Operation

The power supply unit and input and load devices are to be connected to the test component in the same configuration as in the actual vehicle, and the equipment to generate the transient voltage is to be connected to the test component to enable operation during the test. The test component is to be tested as described in **4.5,** by applying and then removing the transient voltage stipulated in **Table 2** and recording the resultant device characteristics.

Table 2: Transient voltage endurance test conditions

Category	Test type		Test conditions						Test cycles	Transient voltage location
			V_P V	τ µs	t s	R_i Ω	Wave-form	Transient voltage generating unit		
12-V system	Type B	B-1	-80	60000	0.5–30	8	Fig. 1	Fig. 2	10000	Power supply terminals
		B-2	-260	2000		80			10000	
24-V system	Type E		-320	26000		210			10000	

Remark 1: Components permanently connected to the power supply voltage are to be tested subject to agreement of the delivery

AVA Documents Document Sharing Hub

Full document details: JASO D902 1995

supervisors.

2: Type B or E here: Exponentially attenuating negative electrode transient voltage stipulated in Table 3 of **JASO D 001**.

V_p: Maximum value of transient voltage

τ: Attenuation time constant (time required for voltage to attenuate to 36.8% of maximum)

t: Repeat period

R_i: Output impedance of transient voltage generator

Figure 1: Voltage waveform for transient voltage endurance test type B and E

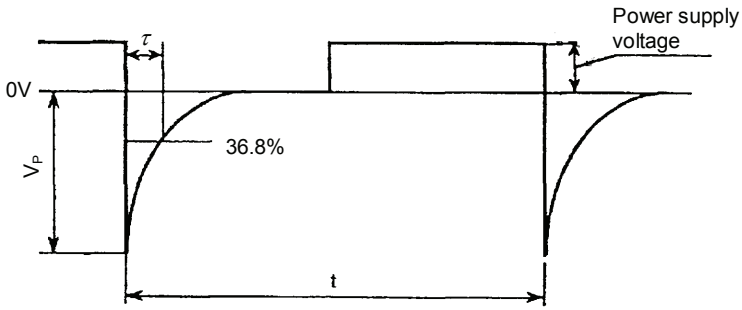

Remark: The time taken to reach the maximum transient voltage V_p from 0 V must not exceed 1 μs.

Figure 2: Voltage generator circuit for transient voltage endurance test type B and E

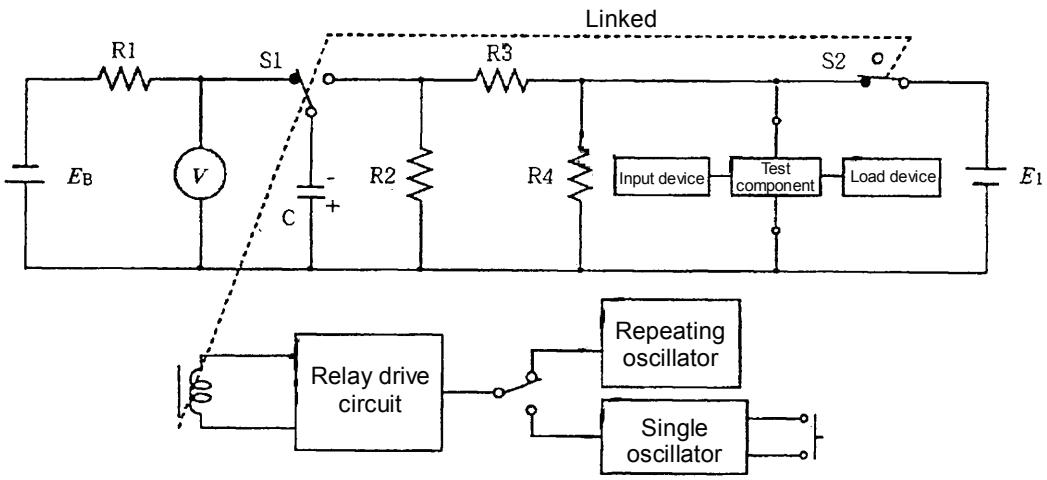

E_B: Capacitor charging power supply

E_1: Power supply unit

V: Voltmeter

Remark 1: When the relay is de-energized, S2 is on, and S1 switches to the left to charge C.

2: When the relay is energized, S2 switches off, the power supply voltage applied to the device is cut off, and S1 switches to the right to discharge C.

3: The constants for each circuit are shown in **Table 3.**

Documents
Document Sharing Hub
Full document details: JASO D902 1995

Table 3: Constants for transient voltage endurance test type B and E generator circuits

Test type		Voltage setting V	Resistance R1	Resistance R2 Ω	Resistance R3 Ω	Resistance R4 Ω	Capacitor C μF	**Remarks**
Type B	B-1	-100	Determined by capacity of charging power supply.	50 (10)	10 (10)	40 (10)	2400	Select any combination.
		-80		20 (10)	8 (10)	∞	3000	
	B-2	-260		60 (5)	80 (5)	∞	33	—
Type E		-457		27 (100)	300 (10)	700 (10)	1000	Select any combination.
		-320		13 (100)	210 (10)	∞	2000	

Remark 1: Values in parentheses are resistor power rating reference values. **Units: W**

2: The standard values for resistors and capacitors are actual values, not indicated values.

5.2 Thermal shock endurance test

5.2.1 Objectives

To evaluate the degradation of characteristics—and in particular the service life—of solder connections due to thermal fatigue in the course of device use.

5.2.2 Test apparatus

Includes the following two constant-temperature chambers, or a combination of the two that allows the test component to be brought to the specified temperature within five minutes of placement within the chamber.

(1) Constant-temperature chamber capable of maintaining temperature at -40°C ±2°C

(2) Constant-temperature chamber capable of maintaining temperature at 85°C ±2°C

5.2.3 Operation

The test component is to be placed inside a low-temperature constant-temperature chamber preset to -40°C and left for the period stipulated in **Table 5**. The test component is then to be removed and quickly placed in a high-temperature constant-temperature chamber preset as stipulated in **Table 4** and left for the period stipulated in Table 5. The component is then to be quickly placed in the low-temperature constant-temperature chamber preset as stipulated in Table 4 and left for the period stipulated in **Table 5**. These steps form one test cycle (see **Figure 3**), and this cycle is to be repeated 200 times continuously before removing the test component from the chamber and allowing it to sit for two hours or longer at room temperature; it is then to be tested as described in **4.5**. The device characteristics are to be recorded and the surface of the circuit board is to be inspected.

Table 4: Thermal shock endurance temperature setting

Condition category	Temperature setting	
	High temp.	Low temp.
Type 1	85°C	-40°C
Type 2	To be agreed upon by delivery supervisors	

Remark: Selection of condition categories is to be agreed upon by the delivery supervisors, with reference to the device's acceptable storage temperature.

Documents
Document Sharing Hub
Full document details: JASO D902 1995

Table 5: Standing and movement times at preset temperatures

Device characteristics and weight (kg)	T2, T4	T1, T3
Solder connection temperatures are to be as indicated at right if they can be measured. Otherwise, temperatures are to be as indicated below, in accordance with weight.	At least five minutes after temperature of solder connection has reached the chamber preset temperature ±2°C.	5 mins. max.
Less than 0.2 0.2 or more and less than 0.8 0.8 or more and less than 1.5 1.5 or more	0.5 h 1.0 h 1.5 h 2.0 h	

Remark: The permissible tolerances for the standing times T2 and T4 are between 0 and 15 minutes.

Figure 3: Thermal shock endurance test pattern

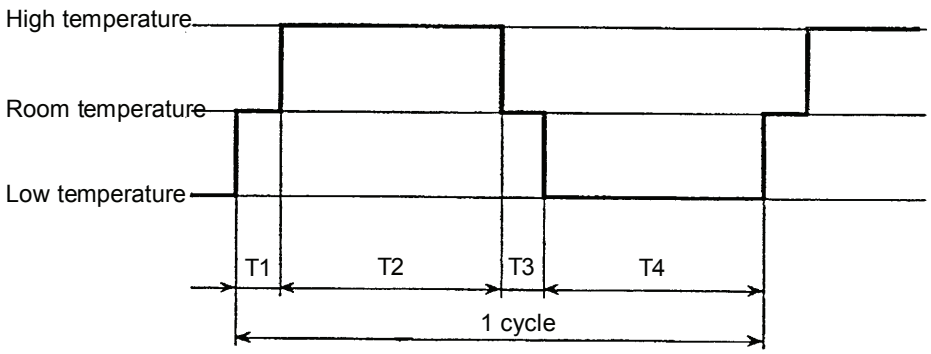

5.3 High-temperature high-humidity electrical test

5.3.1 Objectives

To evaluate the durability of devices used or stored in high-temperature, high-humidity environments.

5.3.2 Test apparatus

Includes high-temperature high-humidity chamber (capable of maintaining the temperature and humidity conditions stipulated in **5.3.3** for extended periods), power supply unit, and input and load devices.

5.3.3 Operation

Place the test component at room temperature into the high-temperature high-humidity chamber and connect to the power supply unit and input and load devices outside the chamber to enable operation. Gradually increase the temperature and humidity and apply the test voltage stipulated in **4.4** for the period stipulated in **Table 7** once the chamber has reached the temperature and humidity conditions stipulated in **Table 6**. The test component is not to be operated at this point.

The subsequent procedure is as follows.

Table 6: High-temperature high-humidity setting conditions

Condition category	Humidity setting
Type 1	60°C/90%
Type 2	85°C/85%
Type 3	To be agreed upon by delivery supervisors

Remark 1: Selection of condition categories is to be agreed upon by the delivery supervisors.

2: Temperature tolerance is ±2°C and humidity tolerance is ±5%.

Table 7: High-temperature high-humidity electrical test times

Condition category	Time setting (h)

Documents
Document Sharing Hub
Full document details: JASO D902 1995

Type 1	96
Type 2	240
Type 3	512
Type 4	1344
Type 5	To be agreed upon by delivery supervisors

Remark: Selection of condition categories is to be agreed upon by the delivery supervisors.

(1) Test promptly as described in **4.5** after allowing to stand for 1.5 h ±0.5 h at 25°C ±5°C and 65% ±20% humidity. Record the device characteristics and inspect visually.

(2) Next, where necessary, test promptly as described in **4.5** after allowing to stand for 22 h ±2 h at 25°C ±5°C and 65% ±20% humidity. Record the device characteristics and inspect visually.

(3) If a record of characteristics immediately after the high-temperature high-humidity electrical test is required, test promptly as described in **4.5** before removing the test component from the chamber (without removing surface water droplets), and record the device characteristics. Then record the device characteristics again, this time as described in **(1)** and **(2)** above and inspect visually.

5.4 Vibration endurance test

5.4.1 Objectives

To evaluate endurance against vibration experienced in the operating environment.

5.4.2 Test apparatus

The vibration generator must satisfy the following conditions.

(1) Vibration waveform and distortion The vibration applied to the test component is to be in the form of a sine wave, and the harmonic component content must not exceed 25% at the test component mounting location.

(2) Vibration amplitude tolerances The tolerances for the amplitude in the stipulated direction of vibration are to be within ±15% of the stipulated value within the stipulated frequency range.

(3) Vibration perpendicular to the stipulated direction of vibration The maximum amplitude of vibration perpendicular to the stipulated direction of vibration is to be within ±25% of the stipulated direction of vibration at the test component mounting location.

(4) Vibration frequency tolerance ±1 Hz for up to 50 Hz, and within ±2% for over 50 Hz.

(5) Sweep method Sweeping is to be continuous and logarithmic unless otherwise specified, but uniform sweeping is acceptable. One sweeping is to cover the specified frequency range in both directions; i.e., from 100 Hz to 2,000 Hz to 100 Hz.

Remark: If the vibration generator produces a magnetic field and the test component is sensitive to magnetic effects, the maximum magnetism tolerances are to be specified by the delivery supervisors.

5.4.3 Test categories

The tests are categorized as follows.

(1) Resonance point detection test: Test to determine the resonant frequencies for the device.

(2) Vibration endurance test: Excite with constant vibration to assess the durability of the device against this type of vibration.

(3) Sweep vibration endurance test: Excite by increasing and decreasing frequency at a constant rate to assess the durability of the device against this type of vibration.

Remark: The sweep vibration endurance test is to be used when vibration characteristics are not obtainable for new development products or when resonance points are unknown in the case of sealed or complex products. The test time period is to be agreed upon among the delivery supervisors, but a long period of time is normally required to sweep over a wide frequency range. The vibration endurance test should therefore ideally be conducted after the resonance point detection

Documents
Document Sharing Hub
Full document details: JASO D902 1995

test.

5.4.4 Test conditions

(1) Test sequence: Testing is to be conducted in the following sequence: resonance point detection test, vibration endurance test, sweep vibration endurance test. The resonance point detection test and sweep vibration endurance test may, however, be conducted together.

(2) Test component mounting: The test component should normally be mounted on the vibration rig in a configuration as close as possible to the actual vehicle mounting.

(3) Test component operation: The test component should normally be operational during testing.

(4) Vibration excitation: Simple vibration is to be applied to the mounted test component vertically, laterally, and longitudinally in sequence.

(5) Vibration acceleration detection: Vibration acceleration is normally to be measured at the test component mounting. It may, however, be measured on the vibration rig.

(6) Vibration condition category: As stipulated in **3.** (Vibration condition categories) in **JIS D 1601.**
Typical components corresponding to each category are listed in **Reference Table 1.**

5.4.5 Test method

(1) Resonance point detection method: As stipulated in 5.1 (Resonance point detection method) in **JIS D 1601.**

(2) Vibration endurance test method: As stipulated in "(1) No resonance" and "(2) With resonance" in **5.3** (Vibration endurance test method) in **JIS D 1601.**

(3) Sweep vibration endurance test method: As stipulated in **5.4** (Sweep vibration endurance test method) in **JIS D 1601.**

5.4.6 Test component measurement

(1) The test component is to be tested as described in **4.5** before and after the vibration endurance test, and the device characteristics are to be recorded.

(2) The characteristics measured during the vibration endurance test are to be agreed upon by the delivery supervisors. However, in the case of components in which on/off switching functions are susceptible to the effects of vibration, inspection is required during or after testing to verify satisfactory functionality over the entire test vibration frequency range (or at test vibration frequencies at which interference is likely).

Reference Table 1: Typical components corresponding to vibration test condition categories

Category	Location (example)	Typical component (for reference)
Type A	Vehicle interior	Meter, clock, audio system, door control, airbag system, wiper control, engine control unit, anti-lock braking system
Type B	Vehicle exterior	GPS, exterior temperature sensor, rear sonar
	Engine room	Igniter (body-mounted), pressure sensor
Type C	Engine	Intake air temperature sensor, airflow sensor
Type D	Below springs	Absorber hydraulic sensor
	Engine	Igniter, regulator, combustion pressure sensor

Related standards:

JIS C 0022 Basic environmental testing procedures Part 2: Tests, Test Ca: Damp heat, steady state

JIS C 0040 Environmental testing Part 2: Tests — Test Fc: Vibration (sinusoidal)

JIS D 0101 Glossary of terms relating to kinds of automobiles

JIS D 5005 Nominal voltages and test voltages for automotive electric equipments

IEC Pub. 68-2-6 Issue 5 (1982) Test Fc and guide: Vibration (sinusoidal) and revised document No. 1 (1983)

AVA Documents
Document Sharing Hub
Full document details: JASO D902 1995