Automotive parts - Performance and test method of locking fasteners

1. Scope

This standard specifies the locking performance of and the test procedures for the locking fasteners used in automotive applications, wherein the prevailing torque is generated to accomplish their locking function.

2. Normative references

The following standards, when referred to in this standard, constitutes a part of the specifications of this standard. As required, the most recently updated version of the applicable standard (including addenda) shall be applied.

JIS B0101: Screw threads and fasteners -- Vocabulary

JIS B0209-2: ISO general purpose metric screw threads -- Tolerances -- Part 2: Limits of sizes for general purpose external and internal screw threads -- Medium quality (fitting class)

JIS B1083: General rules for tightening of threaded fasteners

JASO F101: Hexagon head bolts and hexagon head screws

JASO F102: Hexagon nuts and hexagon thin nuts

3. Definitions

Definitions of main terms used in this standard, in addition to be in conformity with **JIS B0101** and **JIS B1083**, shall be as follows:

a) Driving torque

Torque generated while a threaded fastener is being driven in.

b) Initial removal torque

Initial torque measured during the removal of a threaded fastener, just as it starts to move, with no force acting on the seat face. It is called the **breakaway torque** when referring to fasteners that are pre-coated with an adhesive.

c) Prevailing torque

In this standard, it refers to dynamic torque measured at a specified turning angle in the removal direction of a threaded fastener. If no turning angle is specified (designated or prescribed), it is assumed to be the mean value of measurements taken at 90°, 180°, 270°, and 360°, without including the initial removal torque or the breakaway torque indicated in **b)**.

4. Type

Locking fasteners shall be classified in terms of the two types indicated in **Table 1**.

Table 1 Types of locking fasteners

Type	Feature	Product example	Advantage	Disadvantage
A	Low driving torque type	Nut with friction plate, nylon-fused bolt and nut	· Maintains a stable axial tension due to its low driving torque and minimal variances. · Can be expected to be reused several times.	· Also cannot be expected to provide a locking effect due to its low removal torque. · Nylon is susceptible to heat.
B	Low driving torque and high removal torque type	Adhesive pre-coated bolt and nut	· Can be expected to provide a locking effect due to its high removal torque. · Maintains a stable axial tension due to its low driving torque and minimal variances.	· Cannot be expected to be reused. As a product, it has a limited storage life. · The adhesive takes time to harden.

Documents
Document Sharing Hub
Full document details: JASO F125 2004

5. Requirements

Table 2 shows the type breakdown performance criteria of locking fasteners.

Table 2 Type breakdown performance criteria **Unit:** N·m

Type	Thread size	Driving torque (max)	Initial removal torque (min)	Breakaway torque lower limit (min)	Breakaway torque upper limit (max)	Prevailing torque (min)
A	M6 × 1.0	0.3	0.15	-	-	0.1
	M8 × 1.25	0.6	0.3	-	-	0.2
	M10 × 1.25	1.1	0.5	-	-	0.3
	M12 × 1.25	1.6	0.8	-	-	0.5
B	M6 × 1.0	1.8	-	1.5	6	0.8
	M8 × 1.25	2.8	-	4.0	15	2.0
	M10 × 1.25	5.5	-	11	53	4.0
	M12 × 1.25	7.2	-	16	95	7.0

6. Test procedures

6.1 Outline of test

As a substitute characteristic for locking performance, this test measures the initial removal torque (including breakaway torque) and prevailing torque. A torque measurement is obtained by joining a bolt and a nut, without applying a force on their seat surfaces.

6.2 Test equipment

The test equipment is described as follows.

6.2.1 Tester with data recording device

Consists of holders that determine the position and posture of a bolt head, a rotating device that turns a bolt or a nut at a constant speed, a torque measuring device, and a recorder with a maximum response time of 1 ms (see **Figure 1**).

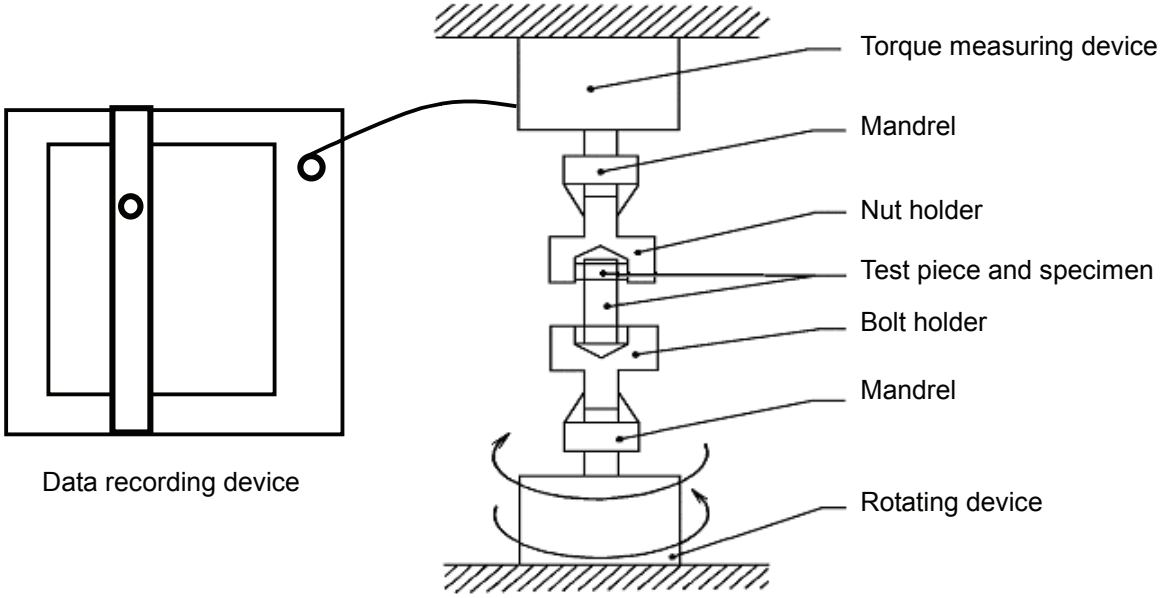

Figure 1 Tester with data recording device

Documents
Document Sharing Hub
Full document details: JASO F125 2004

6.2.2 Tester with direct-reading device

Consists of holders that determine the position and posture of a bolt head, and a torque wrench with a measurement accuracy of ±5 % (see **Figure 2**).

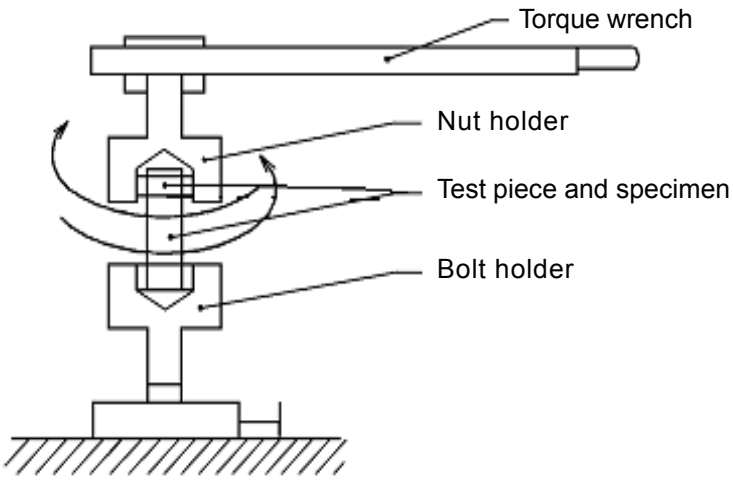

Figure 2 Tester with a direct-reading device

6.3 Test pieces

Test pieces are described in **6.3.1** and **6.3.2**.

Incidentally, the test pieces are specimens; as such, they are not intended to specify locking fasteners.

6.3.1 Bolts

Bolts, which are specified by **JASO F101**, shall be as follows:

Type: This standard does not designate any type in particular.

Threads: External threads having a **6 g** tolerance class as specified by **JIS B0209-2**.

Thread sizes: M6 × 1.0, M8 × 1.25, M10 × 1.25, and M12 × 1.25

While this standard does not designate any length in particular, the use of a bolt of a length that can affect the outcome of the tests shall be avoided. Furthermore, while this standard does not designate any thread length in particular, ample length shall be provided so as to prevent the incomplete thread portion from bearing any load.

Strength class: 8.8

Surface treatment: per agreement between concerned parties.

6.3.2 Nuts

Nuts, which are specified by JASO F102, shall be as follows:

Type: This standard does not designate any type in particular.

Threads: Internal threads having a **6 H** tolerance class as specified by **JIS B0209-2**.

Nominal thread sizes: M6 × 1.0, M8 × 1.25, M10 × 1.25, and M12 × 1.25

Strength class: 8N

Surface treatment: per agreement between concerned parties.

6.4 Test conditions

Test conditions shall be as follows.

6.4.1 Test quantity

The quantity to be tested shall be five pieces or more.

6.4.2 Joining position of bolt and nut

The joining position of the bolt and the nut shall be as follows:

Drive the bolt through until two complete threads at the end of the bolt protrude through the nut, without taking the incomplete threads into account.

Start measuring from this position (see **Figure 3**).

AVA Documents
Document Sharing Hub

Full document details: JASO F125 2004