Automotive parts - Polyamide (nylon) tube fittings - Performance requirements

1 Scope

This standard specifies the performance requirements of tube fittings (hereinafter referred to as "fittings") to be connected to polyamide tubes (hereinafter referred to as "tubes") specified in **JASO M317** and the tubes and fittings coupled together (hereinafter referred to as "tube assemblies").

The maximum working pressure of the tube assemblies (hereinafter referring to the gauge pressure) shall be 1250 kPa and the ambient temperature and the working air temperature shall be -40 to +100 °C.

Remarks There are two types of pressure specifications with the maximum working pressure of 1000 kPa and 1250 kPa for the applicable tubes. This standard specifies requirements for each pressure specifications.

2 Normative reference

The following standards contain which, thorough reference in this Standard, constitute provisions of this Standard. The most recent editions of the standard indicated below shall be applied.

JASO M317 Nylon tubes for air brake piping of automobiles

JASO Z202 Automotive parts - Pipe fittings - Glossary of terms

3 Definitions

Definitions of main terms used in this standard shall be based on **JASO Z202** and as follows.

3.1 Threaded lock type fittings

Connection type fittings with a sleeve set at the joint portion for leak prevention and a sleeve nut for threaded a tube.

3.2 Push-in fittings

Pipe fittings with a V-ring, etc. set at the joint portion for leak prevention which enables attachment/detachment of a tube by operating the holding and releasing mechanisms of the connector and has a structure to seal the tube.

4 Types

There are 2 types of fittings as shown in **Table 1** according to the structure of connection with the tubes.

Documents
Document Sharing Hub

Full document details: JASO F409 2006

Table 1 Types of fittings

Type	Structural drawing
Threaded lock type fitting	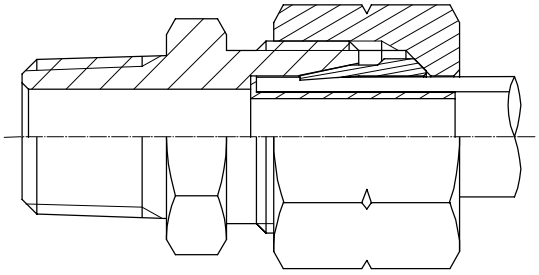
Push-in fitting	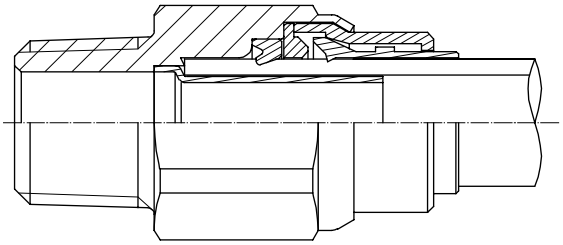
Remarks 1 See **Annex A** for the details of the threaded lock type fitting. **Remarks 2** The push-in fitting is shown as an example.	

Documents
Document Sharing Hub
Full document details: JASO F409 2006

5 Performance requirements

See **Table 2** for the performance requirements of the tube assemblies.

Table 2 Performance requirements

Item	Performance requirements		Test method
Airtightness	No leak shall be allowed under any temperature conditions.		See **6.1**
Holding power of fittings	It shall exceed the value specified in **Table 3**.		See **6.2**
Breaking pressure	23 °C	Tube assembly with a maximum working pressure of 1000 kPa: 4000 kPa min. Tube assembly with a maximum working pressure of 1250 kPa: 5000 kPa min.	See **6.3.1**
	100 °C	Tube assembly with a maximum working pressure of 1000 kPa: 2500 kPa min. Tube assembly with a maximum working pressure of 1250 kPa: 3130 kPa min.	See **6.3.2**
Repeated pressurisation	No damage or leak harmful to the test sample shall be allowed during the test and after the test, and the performance requirements for the breaking pressures (23 °C and 100 °C) shall be satisfied after the test. In addition, 80 % (average) of the breaking pressure of the test sample of the same lot (test result of **6.3.1** and **6.3.2**) shall be exceeded.		See **6.4**
Vibration resistance	No damage harmful to the test sample shall be allowed during the test and after the test, and the performance requirements for the airtightness and the breaking pressure (23 °C) shall be satisfied after the test. In addition, 80 % (average) of the breaking pressure of the test sample of the same lot (test result of **6.3.1**) shall be exceeded.		See **6.5**
Assembly repeatability	No leak shall be allowed.		See **6.6**
Impact resistance	No crack of the test sample shall be allowed during the test and after the test, and the performance requirements for the airtightness and the breaking pressure (23 °C) shall be satisfied after the test. In addition, 80 % (average) of the breaking pressure of the test sample of the same lot (test result of **6.3.1**) shall be exceeded.		See **6.7**
Remarks 1 The tightening torque of the threaded lock type fittings shall be agreed by parties concerned. **Remarks 2** The number of test samples used in the tests shall be agreed by parties concerned.			

Table 3 Holding power of fittings

Unit: N

Maximum working pressure of the tube / Nominal	1 000 kPa	1 250 kPa
4×1	171	231
6×1	286	386
8×1	400	540
10×1.25	625	843
12×1.5	900	1 215
15×1.5	1 157	1 562
16×2	1 599	2 159

AVA Documents
Document Sharing Hub
Full document details: JASO F409 2006

6 Test method

See **6.1** through **6.7** for the test method.

The tubes shall be used in the tests after the lapse of at least 72 hours after production and, unless otherwise specified, the tests shall be conducted at a temperature of 23±2 °C and a humidity of 45 to 75 %. Use the products of the same production lot for a set of evaluation tests specified in this section.

6.1 Airtight test

Put the fittings on both ends of the tube so that the tube length between the fittings is 150 mm or more. After leave it in a chamber at a room temperature, conduct the test in the order from **a)** to **f)**.

a) Raise the temperature in the chamber. When the ambient temperature reaches 100±2 °C, leave it at the same temperature for 1 hour.

b) Conduct the airtight test (see **Table 4**) at an ambient temperature of 100±2 °C.

c) Then, while leaving the test sample of **b)**, lower the temperature of the chamber. When the ambient temperature reaches -40±2 °C, leave it at the same temperature for 1 hour.

d) Conduct the airtight test (see **Table 4**) at an ambient temperature of -40±2 °C.

e) Then, while leaving the test sample of **d)**, raise the temperature of the chamber. When the ambient temperature reaches 23±2 °C, leave it at the same temperature for 1 hour.

f) Conduct the airtight test (see **Table 4**) at an ambient temperature of 23±2 °C.

Table 4 Airtight test condition

Item	Test condition
Test pressure	150 % of the maximum working pressure of the tube
Duration min	1
Fluid used for pressurisation	Dry air or inert gas

6.2 Test for the holding power of fittings

Put tube fittings on both ends of tube so that the tube length between the fittings shall be 150 mm or more. After attaching it to the tensile test machine, conduct the tensile test of the tube assembly under the conditions shown in **Table 5**. During the test, a pressure shall not be applied to the inside of the tube assembly.

Table 5 Test condition for the holding power of fittings

Item		Condition
Tensile rate	mm/min	25
Ambient temperature	°C	23±2

6.3 Breaking pressure test

6.3.1 Breaking pressure test at 23 °C

After putting the fittings on both ends of the tube so that the tube length between the fittings is 150 mm or more, conduct the test in the order from **a)** to **b)**.

a) Leave the test sample in the chamber at 23±2 °C for 1 hour.

b) Increase the pressure inside the test sample at a constant pressure rising rate, and break the tube assembly in 15 to 60 seconds. The maximum pressure during the test shall be the breaking pressure value.

AVA Documents
Document Sharing Hub
Full document details: JASO F409 2006

6.3.2 Breaking pressure test at 100 °C

After putting tube fittings on both ends of the tube so that the tube length between the fittings shall be 150 mm or more, conduct the test in the order from **a)** to **b)**.

a) Leave the test sample in the chamber at 100±2 °C for 1 hour.

b) Increase the pressure inside the test sample at a constant pressure rising rate, and break the tube assembly in 15 to 60 seconds. The maximum pressure during the test shall be the breaking pressure value.

6.4 Repeated pressurisation test

After putting the fittings on both ends of the tube, conduct the test in the order from **a)** to **b)**.

a) Conduct the repeated pressurisation test for 1000000 cycles under the conditions shown in **Table 6**.

b) Conduct the tests specified in **6.3.1** and **6.3.2**.

Table 6 Repeated pressurisation test condition

Item	Condition
Test pressure (when pressurised)	Maximum working pressure
Pressurisation cycle Hz	0.5 to 1.0
Fluid used for pressurisation	Dry air or inert gas
Ambient fluid	Air
Ambient temperature °C	100±2
Test sample installation method	See **Figure 1.**
Pressure wave form	See **Figure 2.**

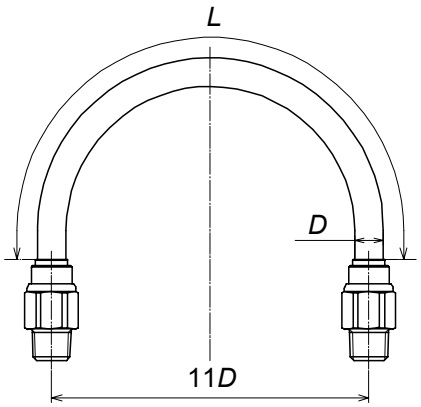

D: Outside diameter of the tube

L: Free length of the tube $L = \frac{11\pi D}{2} + 4D$

Figure 1 Test sample installation method

Documents
Document Sharing Hub
Full document details: JASO F409 2006

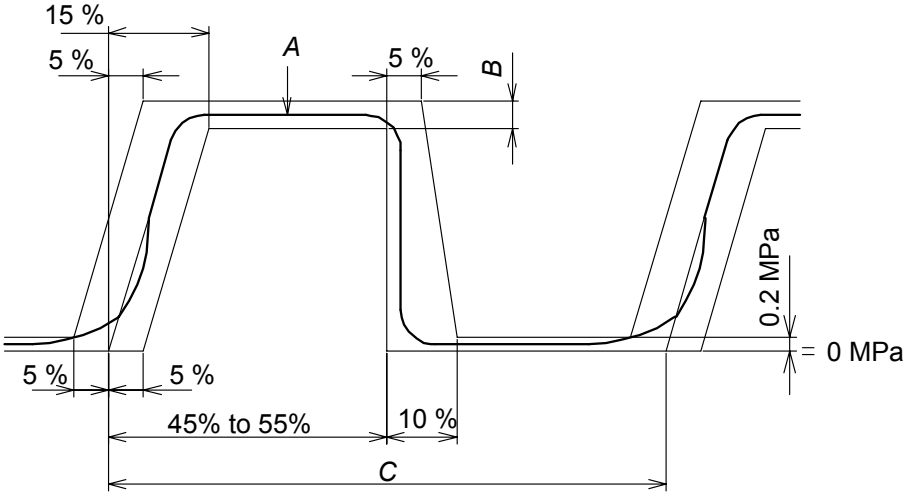

A: Test pressure

B: ±5 % of the test pressure

C: 1 cycle

Figure 2 Pressure wave form

6.5 Vibration test

Put the fittings on both ends of the tube. After attaching it to the vibration test machine, conduct the test in the order from **a)** to **c)**.

a) Conduct the vibration test of the tube assembly under the conditions shown in **Table 7** and **Figure 3**.

b) After the vibration test is finished, leave the test sample at 23±2 °C for 1 hour.

c) Conduct the airtight test under the conditions of **Table 4** and the test of **6.3.1** at the temperature of **b)**.

Table 7 Vibration test condition

Item			Condition 1	Condition 2
Vibrating method	Frequency	Hz	20 to 50	67
	Sweep rate	Hz/min	60	-
	Sweep rate	m/s^2	137.2	294
	Duration	h	(79.4)	8
	Number of cycles		10 000 000	(1 929 600)
	Vibrating direction		Vertical (79.4 hr)	Vertical (4 hr), lateral (2 hr) and longitudinal (2 hr)
Pressurisation method	Pressure		Maximum working pressure	Maximum working pressure
	Fluid		Dry air or inert gas	Dry air or inert gas
Ambience	Temperature	°C	100±2	100±2
	Fluid		Air	Air
Test sample installation method	Shape		L-shape	L-shape
	Bending radius		Minimum bending radius	Minimum bending radius
	Fixing		See **Figure 3.** (On the one end)	See **Figure 3.** (On the one end)
Remarks 1 See **JASO M317** for the minimum bending radius. **Remarks 2** Conduct the test under both Conditions 1 and 2.				

AVA Documents
Document Sharing Hub
Full document details: JASO F409 2006