Two-stroke cycle gasoline engine - Engine oils –Smoke test procedure

1. Scope

This standard specifies the test procedures for evaluating the exhaust smoke performance of lubricating oil used in two-stroke cycle gasoline engines such as motor-cycle engines, utility engines, and outboard engines, etc. (hereinafter referred to as “two-stroke oil”).

Remark: A corresponding international standard is shown below.

ISO 13738 Lubricants, industrial oils and related products (class L) - Family E (Internal combustion engine oils) - Specifications for two-stroke cycle gasoline engine oils (categories EGB, EGC and EGD) (MOD)

2. Applicable standards

The following standards, when referred to in this standard, constitute a part of the specifications of this standard. As required, the most recently updated version of the applicable standard (including addenda) shall be applied.

JIS K 2202 Motor gasoline

JIS K 2249 Crude petroleum and petroleum products -- Determination of density and petroleum measurement tables based on a reference temperature (15 centigrade degrees)

JIS K 2252 Petroleum products -- Testing method for reaction

JIS K 2254 Petroleum products -- Determination of distillation characteristics

JIS K 2255 Petroleum products -- Gasoline -- Determination of lead content

JIS K 2258 Crude oil and petroleum products -- Determination of vapour pressure -- Reid method

JIS K 2261 Petroleum products -- Motor gasoline and aviation fuels -- Determination of existent gum -- Jet evaporation method

JIS K 2280 Petroleum products -- Fuels -- Determination of octane number, cetane number and calculation of cetane index

JIS K 2283 Crude petroleum and petroleum products -- Determination of kinematic viscosity and calculation of viscosity index from kinematic viscosity

JIS K 2501 Petroleum products and lubricants -- Determination of neutralization number

JIS K 2270 Crude petroleum and petroleum products -- Determination of carbon residue

JIS K 2272 Crude oil and petroleum products -- Determination of ash and sulfated ash

JIS K 2513 Petroleum products -- Corrosiveness to copper -- Copper strip test

JIS K 2536 Liquid petroleum products -- Testing method of components Part 1: Fluorescent indicator adsorption method

JIS K 2541 Crude oil and petroleum products -- Determination of sulfur content

Documents
Document Sharing Hub
Full document details: JASO M342 2003

3. Definitions

Definitions of main terms used in this standard shall be as follows.

a) Exhaust smoke

Visible smoke that is emitted from an exhaust pipe, originating from two-stroke oil.

b) Standard reference oil

Two-stoke oil formulated in advance that is used for comparison to evaluate the performance of a candidate oil. It refers to JATRE-1.

c) Calibration oil

Two-stroke oil formulated in advance that is used to check if the engine to be evaluated is in normal condition. It refers to JATRE-1 and JATRE-3.

d) Candidate oil

Lubricating oil, the performance of which is evaluated in the test.

e) Premixed fuel

Premixed fuel containing reference fuel and two-stroke oil (either standard reference, calibration or candidate oil).

f) Mixing ratio

Volume ratio of reference fuel and two-stroke oil.

g) Breaking-in

Breaking-in to be performed prior to the test in order to stabilize the performance of the engine when a new engine or an engine of which the cylinders and the crankshaft system have been replaced is used for the test.

h) Smoke index

Comparative value obtained in the smoke test and indicates the performance of a candidate oil. It is expressed as a percentage, assuming the value of the standard reference oil to be 100.

4. Test equipment

The engine to be used for the test, its modification specifications, and the control equipment and measurement equipment that are required for the test shall be as follows.

4.1 Test engine

As specified in Section **4.2**, modify the engine with the specifications as shown in **Table 1** to obtain stable results from the test.

Table 1 Engine main specifications

Item	Specifications
Engine model	Suzuki SX800R
Number of cylinders and cooling system	Single cylinder, forced-air cooling
Bore diameter × stroke (mm)	46.0×42.0
Displacement (cm^3)	69
Compression ratio	5.6

Documents
Document Sharing Hub

Full document details: JASO M342 2003

4.2 Details of engine modification

4.2.1 Fuel tank

Remove the fuel tank integrated with the engine.

4.2.2 Fuel pressure adjuster

a) Preparation of fuel pressure adjuster

Prepare a suitable fuel pressure adjuster to stabilize fuel pressure. An example is shown in **Fig. 1**.

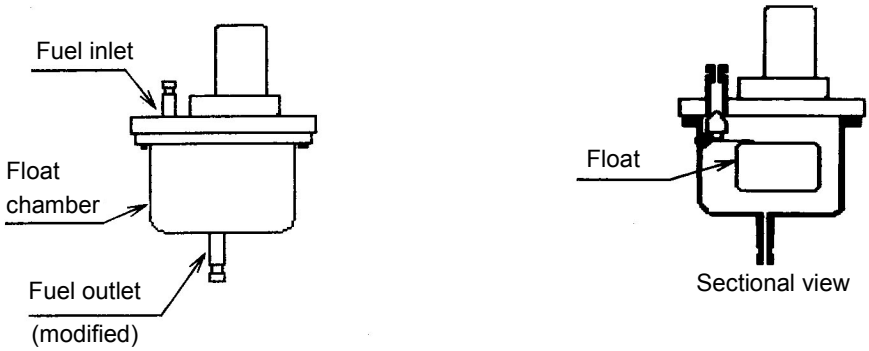

Fig. 1 Fuel pressure adjuster

b) Installation of fuel pressure adjuster

The fuel pressure adjuster shall be installed in place of the removed fuel tank. It shall be fixed with stays and bolts screwed into the tapped holes for fixing the fuel tank.

4.2.3. Muffler

The muffler shall be modified as follows.

a) Removal of glass wool

The glass wool is used inside a standard muffler to reduce the noise. However, since it absorbs unburnt oil in this evaluation for exhaust smoke performance, the glass wool inside shall be removed in accordance with the procedure shown in **Figs. 2 to 5**. After the glass wool is removed, the muffler shall be reassembled and it shall be confirmed that there is no exhaust gas leakage from the weld.

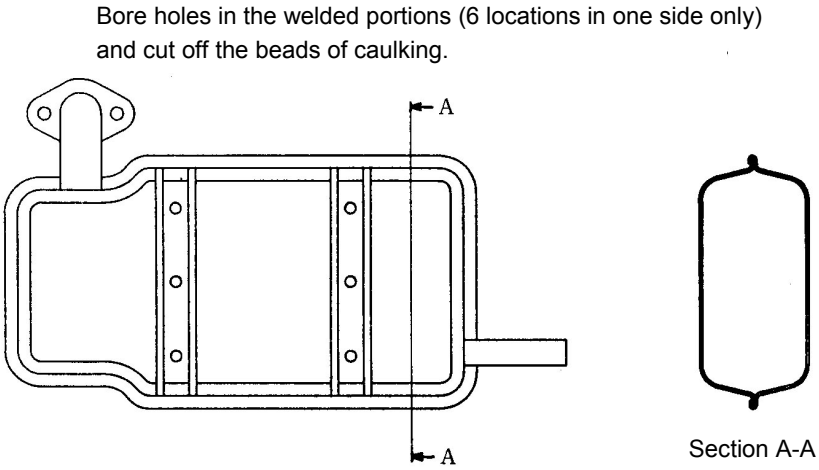

Fig. 2 Modification of muffler

Documents
Document Sharing Hub
Full document details: JASO M342 2003

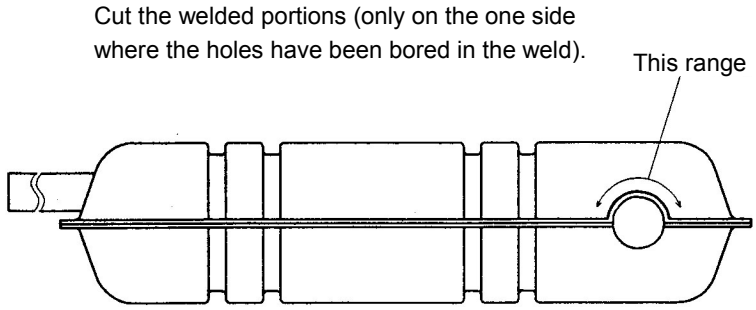

Fig. 3 Periphery of exhaust pipe and tail pipe

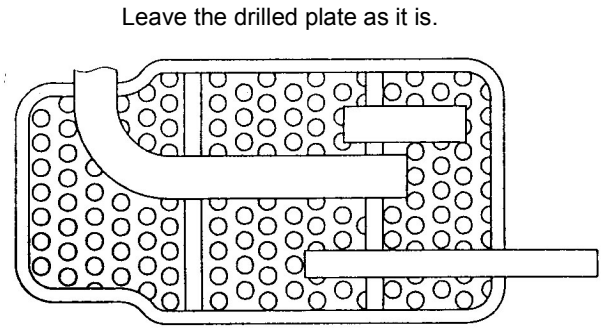

Fig. 4 Removal of glass wool

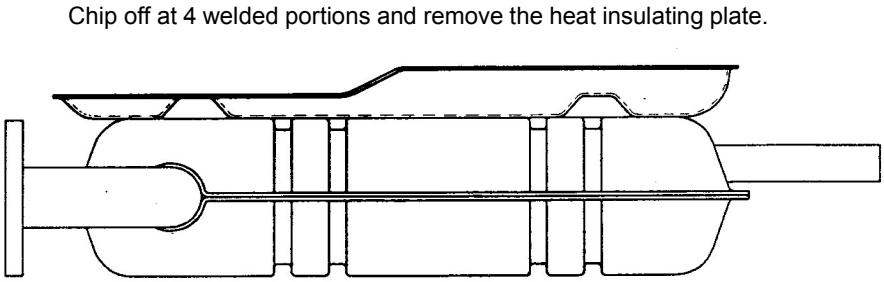

Fig. 5 Removal of heat insulating plate

b) Submuffler

Prepare the submuffler as shown in **Fig. 6** and connect it to the rear end of the muffler by welding. It is desirable for the submuffler to have a structure such that it can be disassembled at a flange to make inside inspection easier since the carbon accumulates inside the submuffler upon long-term use.

Documents
Document Sharing Hub
Full document details: JASO M342 2003

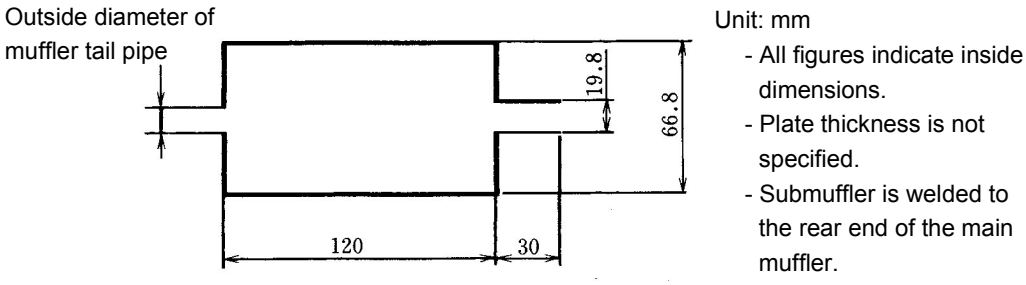

Fig. 6 Structure of submuffler

c) Exhaust pipe

Cut the exhaust pipe along Section A-A as shown in **Fig. 7** and re-weld it as shown in **Fig. 8** to change the installation direction.

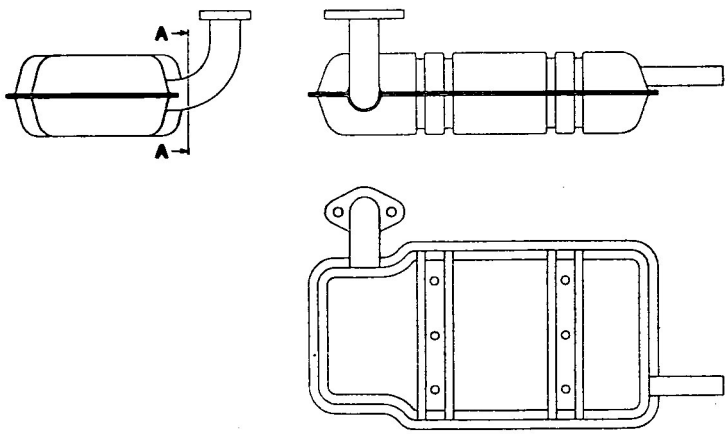

Fig. 7 Before modification

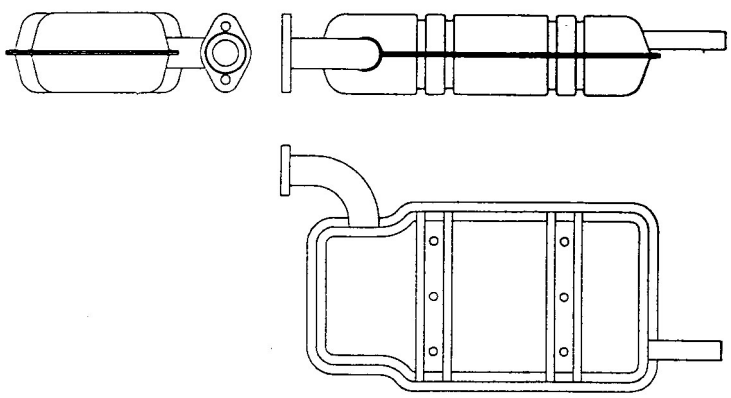

Fig. 8 After modification

Documents
Document Sharing Hub
Full document details: JASO M342 2003

d) Heat insulator

The heat insulator is used to remove oil remaining in the main and submuffler before measuring exhaust smoke. Prepare a mat-like heat insulator of approx.500mm x approx.300mm, and a thickness of approx. 20mm, such as a glass wool. The heat insulator shall be certainly used at operating conditions of 60 Hz, 800W. Attach the heat insulator all around the main muffler and submuffler as shown in **Fig. 9**.

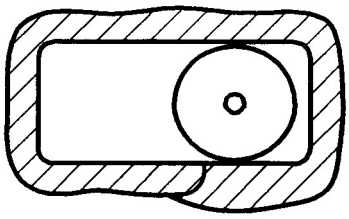

Fig. 9 Attachment of heat insulator

e) Control panel

To make operation of test preparation and the like easier, it is desirable to disconnect the control panel from the generator and connect it to the generator using an extension cord.

4.3 External cooling equipment

It is desirable to use external cooling equipment that is capable of cooling the generator main body and the muffler at the same time, as shown in **Fig. 10**.

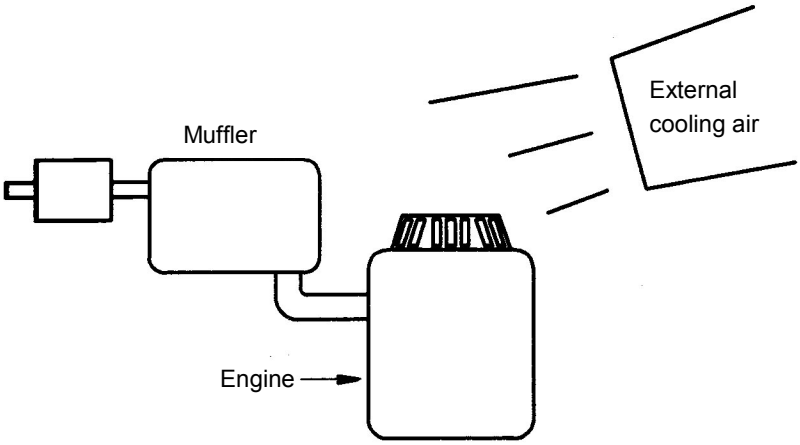

Fig. 10 External cooling equipment

4.4 Electric load absorber

The load absorber shall be an electric load that uses light bulbs, and shall be equivalent to the actual electric power consumption.

Documents
Document Sharing Hub
Full document details: JASO M342 2003

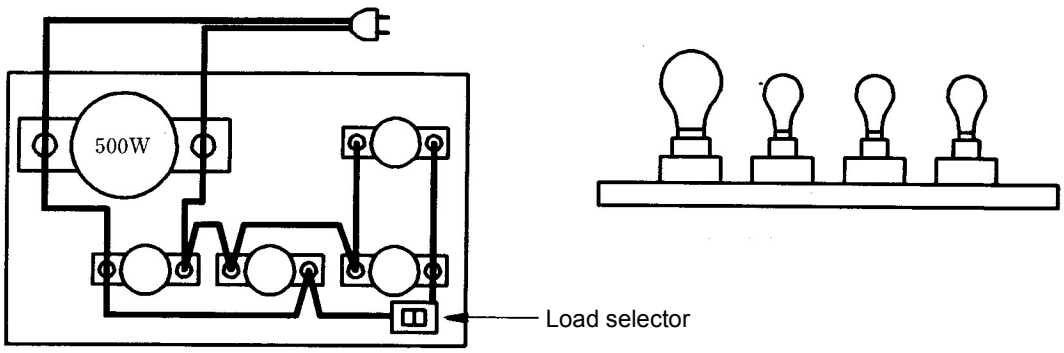

Fig. 11 Electric load absorber (example)

4.5 Measurement equipment

The measurement equipment shall be as follows.

a) Measurement equipment

Measurement equipment capable of measuring the items shown in Table **12** shall be used.

b) Equipment for evaluating exhaust smoke density

A light-absorbing type smoke meter shall be used. The output signals from the smoke meter shall be stabilized through approximately 1000 μF electrolytic capacitors connected in parallel, and then transmitted to a recorder.

c) Recording equipment

It is necessary to use recording equipment capable of continuously recording such as a pen recorder, and it is desirable to have built-in amplifiers for temperature sensors.

d) Thermometer

It is desirable to use a thermometer with accuracy within ±1°C and having an output unit to be connected to the recording equipment.

e) Tachometer

It is desirable to use a tachometer with accuracy within ±10r/min and having an output unit to be connected to the recording equipment.

f) Fuel flow meter

It is desirable to use a fuel flow meter capable of measuring a flow rate in the range of 0 to 1 L/h. A burette may be used as a fuel flow meter.

g) Ammeter

It is desirable to use an ammeter with accuracy within ±0.1A and having an output unit to be connected to the recording equipment.

h) Psychrometer

It is desirable to use a psychrometer with accuracy within ±1°C.

i) Barometer

It is desirable to use a barometer with accuracy within ±1kPa.

Documents
Document Sharing Hub
Full document details: JASO M342 2003