Two-stroke cycle gasoline engine - Engine oils - Exhaust system blocking test procedure

1. Scope

This standard specifies the test procedures for evaluating the degree of output reduction caused by lubricating oil used in two-stroke cycle gasoline engines such as motor cycle engines, utility engines, and outboard engines, etc. (hereinafter referred to as “two-stroke oil”) due to deposits such as carbons in the exhaust system.

Remark: A corresponding international standard is shown below.

ISO 13738: Lubricants, industrial oils and related products (class L) - Family E (Internal combustion engine oils) - Specifications for two-stroke cycle gasoline engine oils (categories EGB, EGC and EGD) (MOD)

2. Normative reference

The following standards, when referred to in this standard, constitutes a part of the specifications of this standard. As required, the most recently updated version of the applicable standard (including addenda) shall be applied.

JIS K 2202 Motor gasoline

JIS K 2249 Crude petroleum and petroleum products -- Determination of density and petroleum measurement tables based on a reference temperature (15 centigrade degrees)

JIS K 2252 Petroleum products -- Testing method for reaction

JIS K 2254 Petroleum products -- Determination of distillation characteristics

JIS K 2255 Petroleum products -- Gasoline -- Determination of lead content

JIS K 2258 Crude oil and petroleum products -- Determination of vapour pressure -- Reid method

JIS K 2261 Petroleum products -- Motor gasoline and aviation fuels -- Determination of existent gum -- Jet evaporation method

JIS K 2280 Petroleum products -- Fuels -- Determination of octane number, cetane number and calculation of cetane index

JIS K 2283 Crude petroleum and petroleum products -- Determination of kinematic viscosity and calculation of viscosity index from kinematic viscosity

JIS K 2501 Petroleum products and lubricants -- Determination of neutralization number

JIS K 2270 Crude petroleum and petroleum products -- Determination of carbon residue

JIS K 2272 Crude oil and petroleum products -- Determination of ash and sulfated ash

JIS K 2513 Petroleum products -- Corrosiveness to copper -- Copper strip test

JIS K 2536 Liquid petroleum products -- Testing method of components Part 1: Fluorescent indicator adsorption method

JIS K 2541 Crude oil and petroleum products -- Determination of sulfur content

3. Definitions

Definitions of main terms used in this standard shall be as follows.

AVA Documents Document Sharing Hub

Full document details: JASO M343 2003

a) Exhaust system blocking property

A degree of blocking caused by two-stroke oil, due to deposits inside the exhaust gas passage from the cylinder exhaust port to the exhaust pipe and muffler.

b) Standard reference oil

Two stoke oil that is used for comparison to evaluate the performance of a candidate oil. It refers to JATRE-1.

c) Calibration oil

Two stroke oil that is used to check if the engine to be evaluated is in normal condition. It refers to JATRE-1 and JATRE-3.

d) Candidate oil

Lubricating oil, the performance of which is evaluated in the test.

e) Premixed fuel

Premixed fuel containing reference fuel and two stroke oil. (either reference, calibration or candidate oil).

f) Mixing ratio

Volume ratio of reference fuel and two stroke oil.

g) Breaking-in

Breaking-in to be performed prior to the test in order to stabilize the performance of the engine when a new engine or an engine of which the cylinders and the crankshaft system have been replaced is used for the test.

h) Mode operation

Evaluation operation conducted while an electric load is applied intermittently according to the exhaust gas temperature.

i) Blocking index

Comparative value obtained in the exhaust system blocking test and indicates the performance of a candidate oil. It is expressed as a percentage assuming the value of the standard reference oil as 100.

4. Test equipment

The engine to be used for the test, its modification specifications, and the control equipment and measuring equipment that are required for the test shall be as follows.

4.1 Test engine

As specified in Section **4.2**, modify the engine with the specifications as shown in **Table 1** to obtain stable results from the test. Use two modified test engines for the test simultaneously.

Table 1 Engine main specifications

Item	Specifications
Engine model	Suzuki SX800R
Number of cylinders, cooling system	Single cylinder, forced-air cooling
Bore diameter × stroke (mm)	46.0×42.0
Displacement (cm^3)	69
Compression ratio	5.6

Documents
Document Sharing Hub

Full document details: JASO M343 2003

4.2 Details of engine modification

4.2.1 Muffler

A muffler installed as standard equipment shall not be used. Instead, purchase a specially arranged muffler that is equipped with a screen and a spark arrester as specified in **Table 6**. Partly modify the muffler such as by removing glass wool inside the muffler as shown in **Fig. 1**. The letters shown in **Fig. 1** are the parts to be modified and correspond to **a) to f)** explained below.

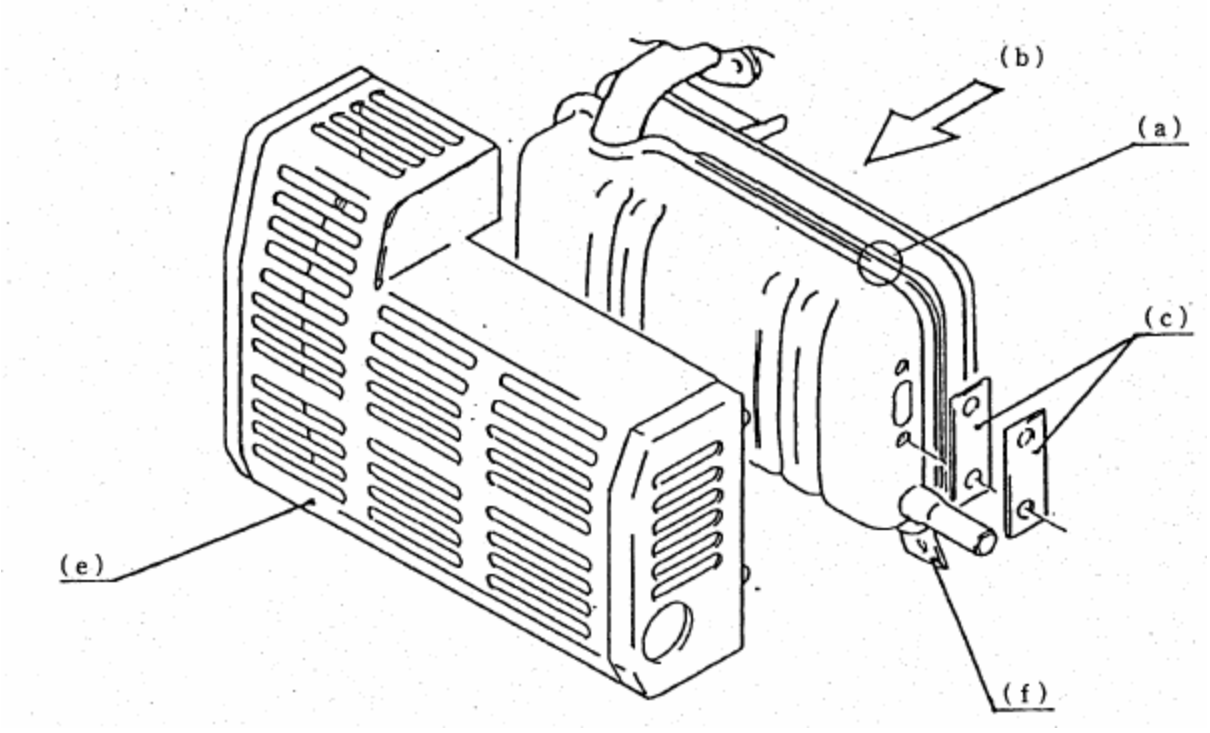

Fig. 1 Modification of muffler

a) As shown in **Fig. 2**, bore holes at 6 spot welding points on the muffler body, and cut off the beads of caulking all around. Disassemble the muffler body and remove the inner piping, partition, and glass wool. Then, reassemble the muffler body back to its original state by welding all around, and plug up the holes by welding. Make sure that there is no exhaust gas leakage from the joint portions.

Documents
Document Sharing Hub
Full document details: JASO M343 2003

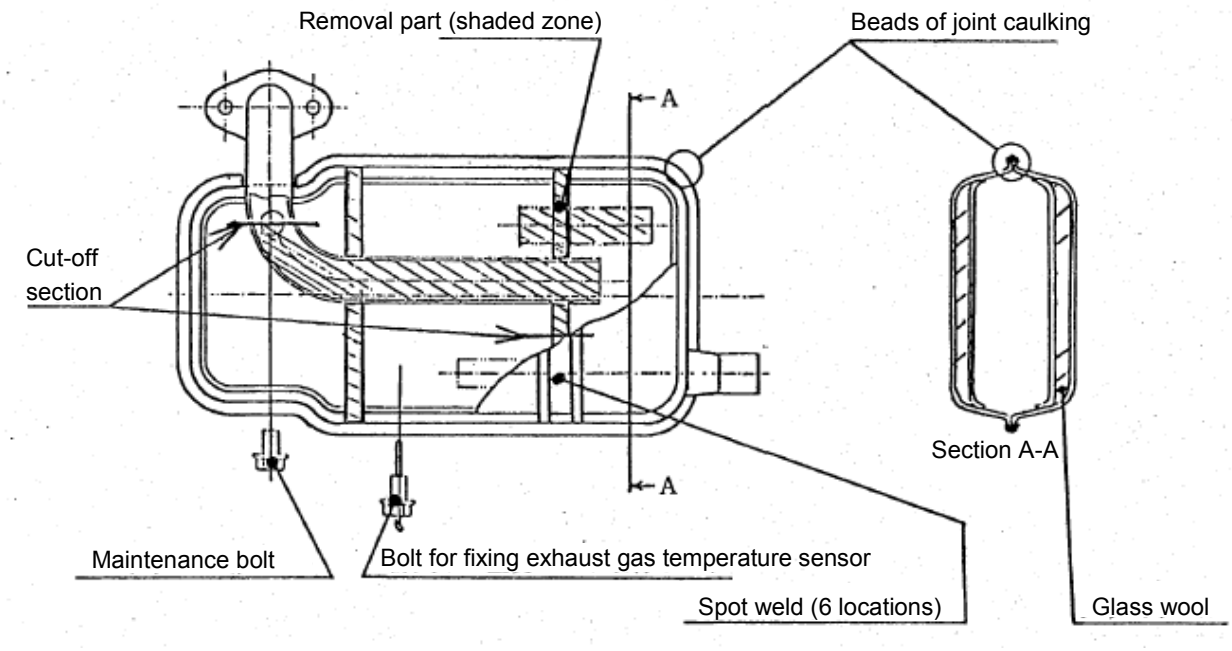

Fig. 2 Internal modification of muffler

b) To make the work of covering the muffler with heat insulator easy, bore holes at four welding points as shown in **Fig. 3**, and remove the thermal insulation plate. Then, plug up the holes by welding.

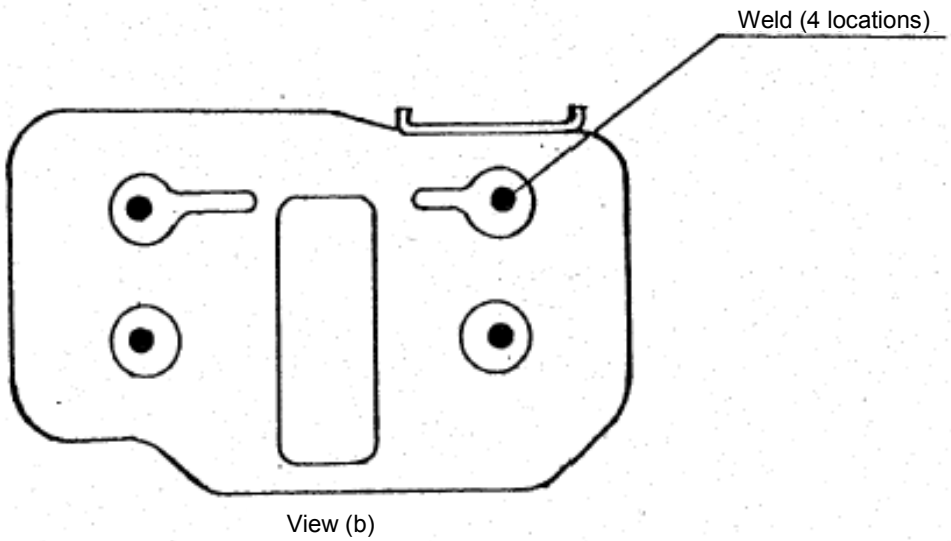

Fig. 3 Removal of heat insulation plate

Documents
Document Sharing Hub
Full document details: JASO M343 2003

c) With reference to the standard equipment and **Fig. 1**, prepare a cover plate made of steel sheet as shown in **Fig. 4** and weld an exhaust gas collecting pipe and an exhaust gas pressure measuring pipe to the plate. Bore holes with a diameter of 4 mm through the gasket having an identical flat shape at the positions corresponding to the exhaust gas collecting pipe and exhaust gas pressure measuring pipe, respectively.

Unit: mm

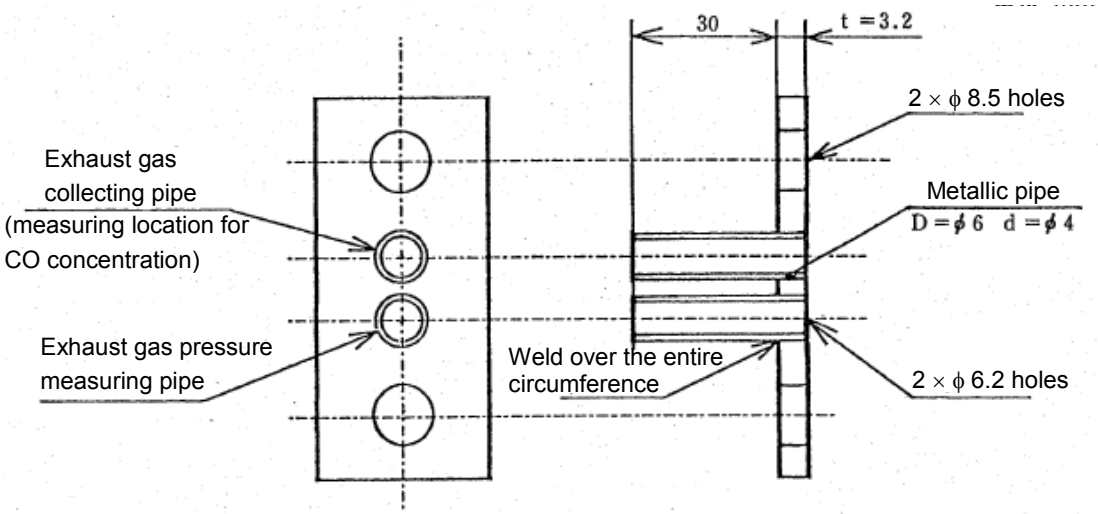

Fig. 4 Preparation of exhaust gas collecting and pressure measuring pipes

d) For thermally insulating the muffler, cover the outer wall of it with a heat insulator such as a glass wool mat having a length of approximately 500mm, a width of approximately 300mm and a thickness of approximately 20mm as shown in **Fig. 5**.

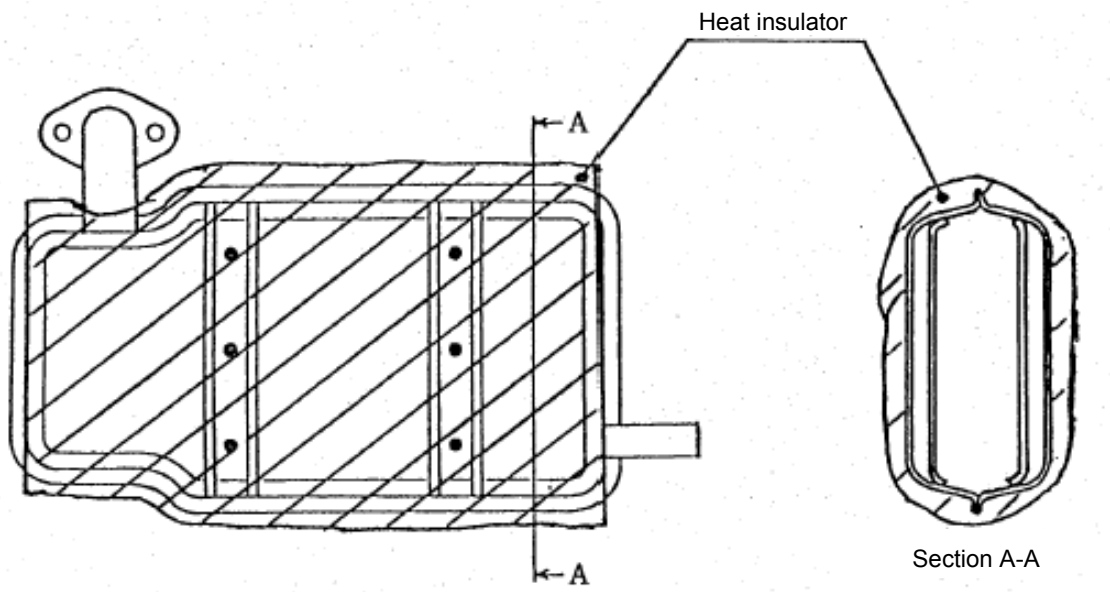

Fig. 5 Heat insulator for muffler (example)

Documents
Document Sharing Hub
Full document details: JASO M343 2003

e) Modify the muffler cover and mount it to the engine such that the cover covers the heat insulator in **d)**.

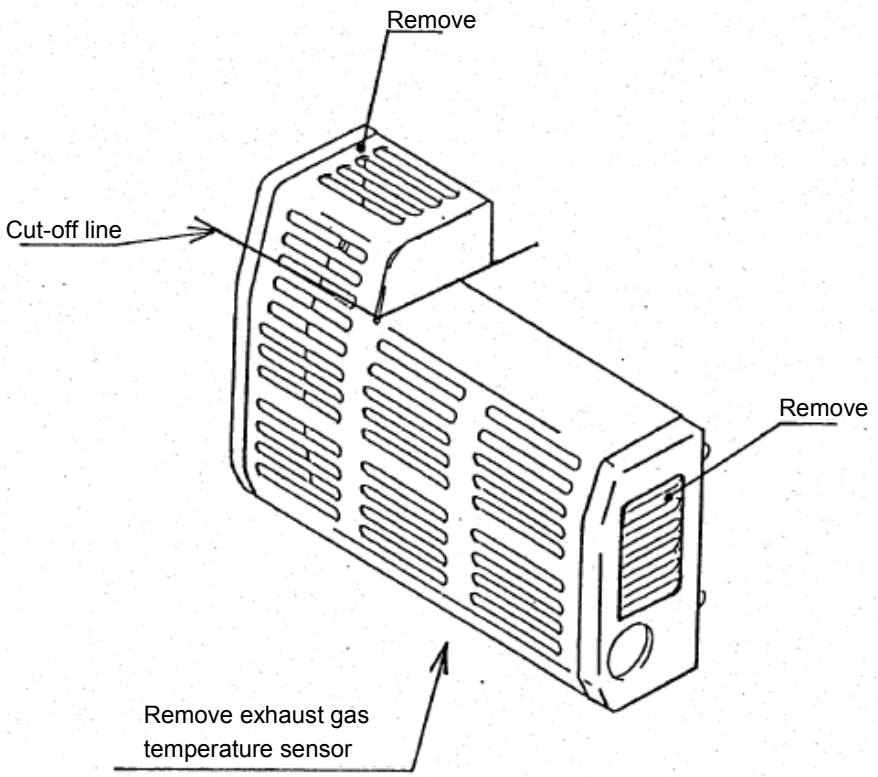

Fig. 6 Modification of muffler cover

f) Change the position of the stay for anchoring the muffler as shown in **Fig. 7** so as to fit the new dimensions.

Unit: mm

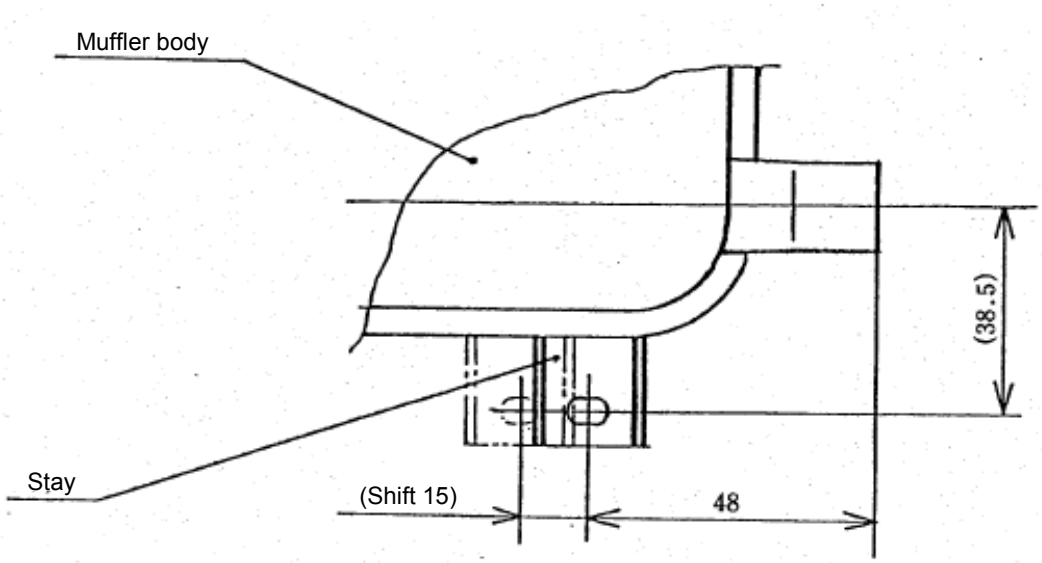

Fig. 7 Modification of anchoring stay

Documents
Document Sharing Hub
Full document details: JASO M343 2003

4.2.2 Intake pipe

Modify the intake manifold so that the intake negative pressure can be measured.

Unit: mm

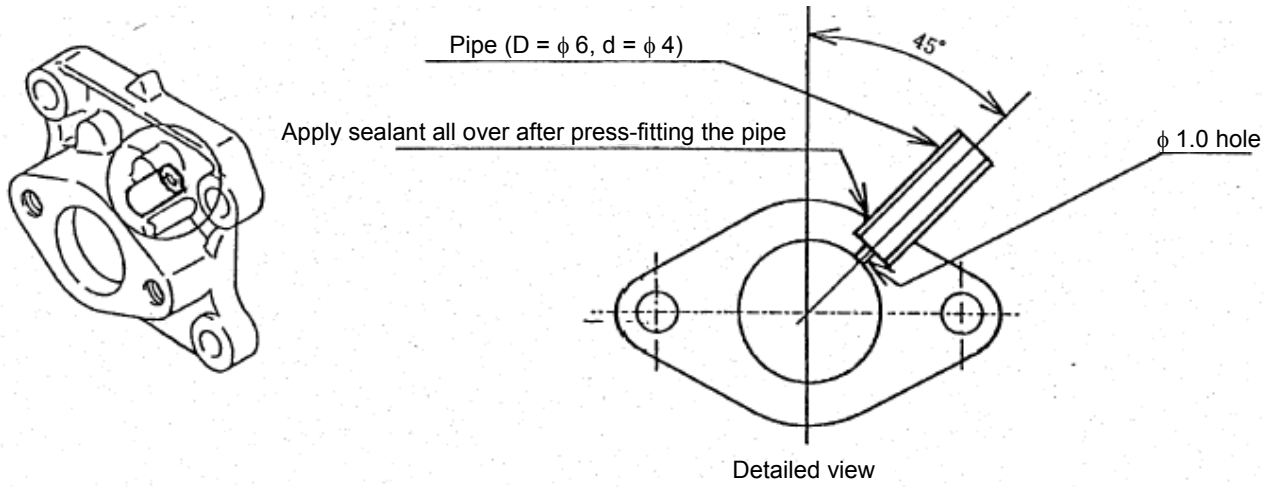

Fig. 8 Modification of intake manifold

4.3 External cooling equipment

External cooling equipment shall not be used.

4.4 Load absorber

The load absorber shall be an electric load that uses light bulbs, and is equivalent to the actual power consumption.

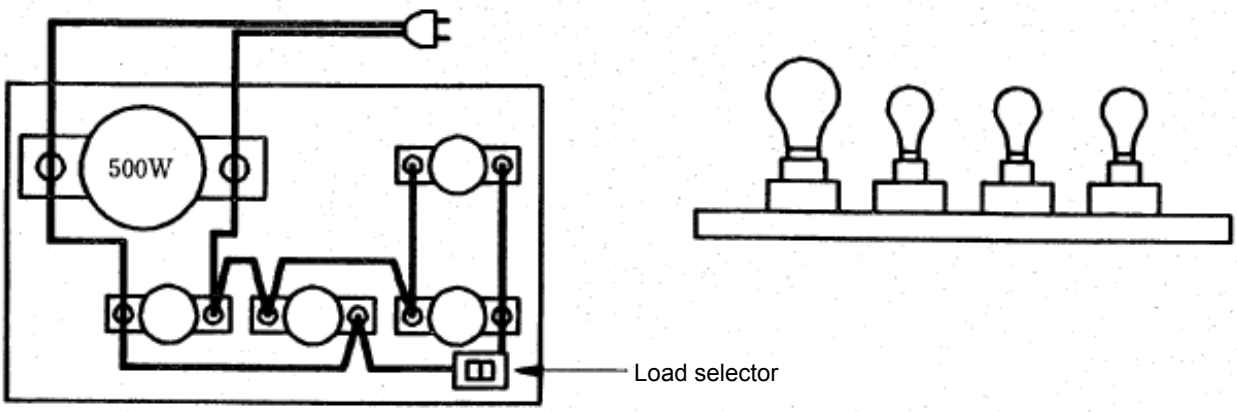

Fig. 9 Load absorber (example)

Documents
Document Sharing Hub
Full document details: JASO M343 2003

4.5 Control equipment, measuring equipment

The control equipment and measuring equipment shall be as follows.

4.5.1 Control equipment

Prepare the following equipment so that operation can be run by the mode shown in **Fig. 10** while an electric load of 750±15W at 60Hz is applied intermittently according to the exhaust gas temperature. **Fig. 14** shown an example of equipment layout.

a) Temperature controller

A commercially available controller is appropriate as a temperature controller.

b) Relay

A combination of commercially available electrical parts is appropriate as a relay. It is desirable to use an explosion-proof type relay.

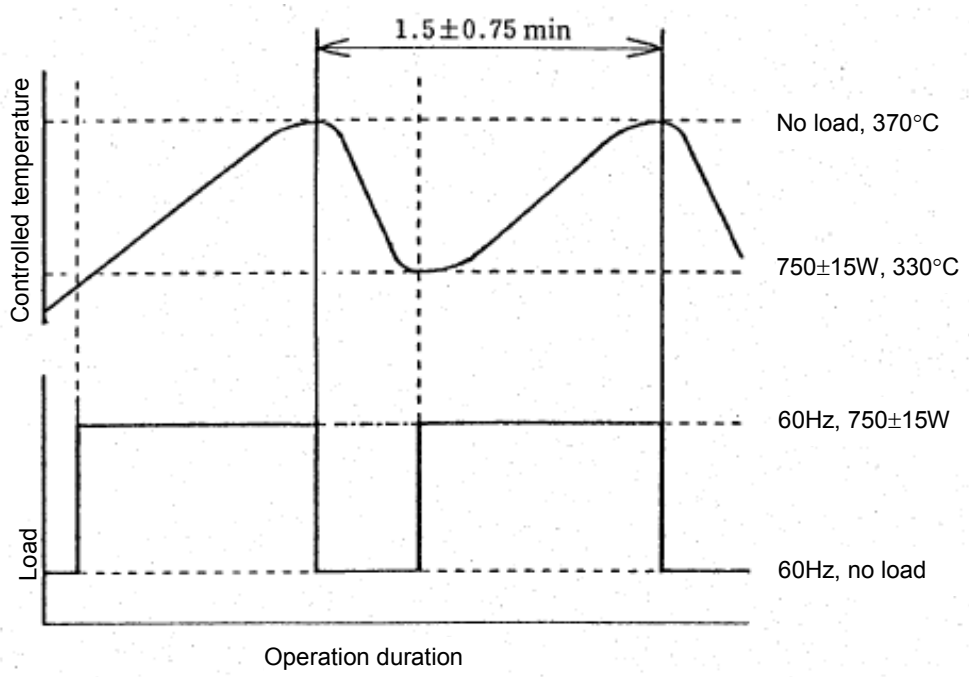

Fig. 10 Operation mode

4.5.2 Measuring equipment

To record data during the mode operation, prepare the following measuring equipment and connect them to the recorder. **Fig. 14** shows an example of equipment layout.

a) Thermometer

It is desirable to use a thermometer with an accuracy within ±1°C and having an output unit to be connected to the recording equipment. However, if a thermometer is incorporated in the recorder, it is not necessary to prepare another.

b) Pressure gauge

It is desirable to use a pressure gauge capable of measuring the exhaust gas pressure in the range of 0 to 20 kPa and having an output unit to be connected to the recording equipment.

Documents
Document Sharing Hub
Full document details: JASO M343 2003