JASO

Road vehicles — Automatic transmission fluids — Test method for anti-shudder performance

JASO M 349:2012

March 15, 2012

Society of Automotive Engineers of Japan, Inc.

Standards Committee

Documents
Document Sharing Hub

Full document details: JASO M349 2012

Contents

Page

1 Scope 1
2 Terms and definitions 1
3 Test method 1
3.1 Low-speed sliding friction test 1
3.2 Test materials 3
3.3 Test preparation 4
3.4 Breaking-in procedure 5
3.5 μ-V characteristics measurement procedure 5
3.6 Endurance test procedure 6
4 Post-test observation of plates and coefficient of friction calculation 7
4.1 Friction plate 7
4.2 Steel plate 7
4.3 Coefficient of friction calculation 7
5 Test report 8
5.1 μ-V characteristics and anti-shudder performance 8
5.2 Measurement of anti-shudder life 8
5.3 Amount of friction plate wear 8
5.4 Condition of friction plate surface 8
5.5 Condition of steel plate surface 8
5.6 Test result report forms 9
6 Test validity 9
6.1 Reproducibility 9
6.2 Repeatability 9
Annex A (Requirement) Test Result (μ-V Characteristics) Report Form (1) 10
Annex B (Requirement) Test Result (dμ/dV, Anti-Shudder Life) Report Form (2) 11
Annex C (Requirement) Test Result (dμ/dV, Anti-Shudder Life) Report Form (3) 12
Annex D (Requirement) Test Result (dμ/dV, Anti-Shudder Life) Report Form (4) 13
Annex E (Requirement) Test Result (dμ/dV, Anti-Shudder Life) Report Form (5) 14
Explanatory Note 15

Documents
Document Sharing Hub

Full document details: JASO M349 2012

Introduction

This document defines an automotive standard revised by the Standards Meeting of the Society of Automotive Engineers of Japan, Inc. subsequent to deliberation by the Standards Committee in accordance with the standardization rules based on the article of association. This standard revises and replaces **JASO M 349**:2010.

This standard is a copyrighted work and is protected by copyright law.

Please note that this standard includes material that may infringe on patents, patent applications subsequent to the laying open of a patent application, or utility model rights.

The Standards Committee of the Society of Automotive Engineers of Japan accepts no responsibility for identifying such patents, patent applications subsequent to the laying open of a patent application, or utility model rights.

Documents
Document Sharing Hub

Full document details: JASO M349 2012

Road vehicles — Automatic transmission fluids — Test method for anti-shudder performance

1 Scope

This standard specifies the method for testing the anti-shudder performance of automatic transmission fluids for cars, trucks, and buses.

2 Terms and definitions

Definitions of main terms used in this standard shall be as follows.

2.1 Shudder

Self-induced vibration occurring in friction clutches or friction brakes.

3 Test method

3.1 Low-speed sliding friction test

The low-velocity sliding friction test machine shall have a structure like the example shown in **Figure 1** and shall consist of the elements listed in **3.1.1** to **3.1.10** below.

3.1.1 Rotating drive unit

The unit shall be able to vary slip speed continuously in the range 0.01 m/s to 1.50 m/s, and accelerate up to 1.50 m/s in 2 s or less with a load of 10,000 N.

3.1.2 Rotational speed measuring device

The measuring device shall be able to measure the slip speed of the rotating drive unit in the range 0.01 m/s to 1.50 m/s.

3.1.3 Drive unit test jig

The jig shall be able to hold a friction plate of the required size.

3.1.4 Container test jig

The jig shall be able to hold a steel plate of the required size.

3.1.5 Test container

The container shall have the capacity to measure 150 ml of the fluid under test. It shall also be able to measure the fluid temperature near the center of the container bottom and control it in the range 40°C to 120°C.

3.1.6 Temperature measurement

The fluid temperature near the center of the container bottom shall be able to be measured in the range 40°C to 120°C.

3.1.7 Gimbal mechanism

The test container shall be able to move flexibly so that the friction plate and steel plate come into contact horizontally as in a gimbal mechanism. Use of a spherical seat bearing instead of a gimbal mechanism is also permitted.

AVA Documents Document Sharing Hub

Full document details: JASO M349 2012

3.1.8 Torque measurement unit

The unit shall be able to transmit the friction force from the vicinity of the gimbal mechanism to a load cell to measure the torque.

3.1.9 Load stand

The stand shall be able to apply a load of up to 10,000 N.

3.1.10 Load measurement

The measuring device shall be located on top of the load stand and be able to measure loads up to 10,000 N.

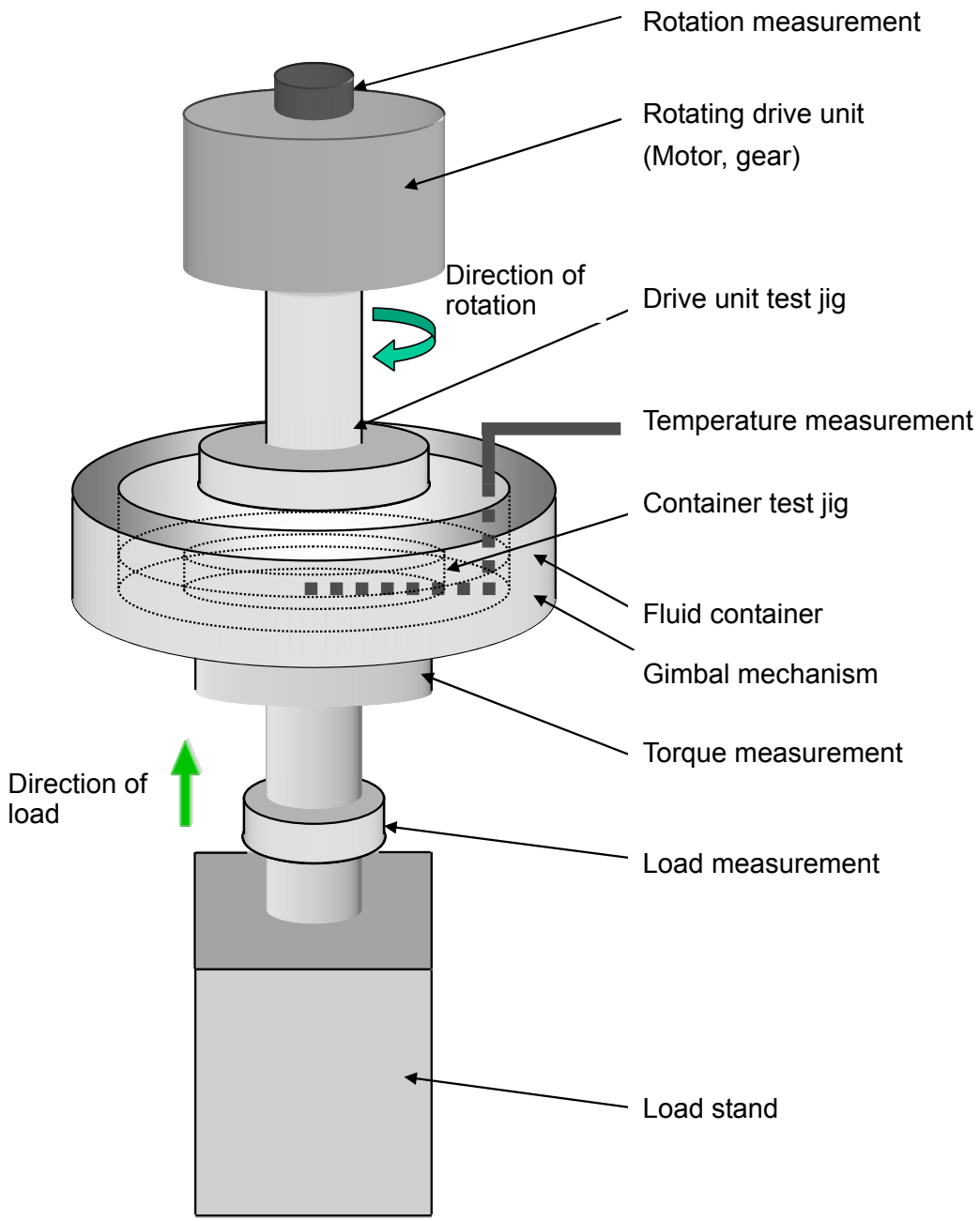

Figure 1—Example structure of low-velocity sliding friction test machine

Documents
Document Sharing Hub
Full document details: JASO M349 2012

3.2 Test materials

3.2.1 Friction plate

Part number A795.D0AK shall be used. Figure 2 shows the detail of the friction plate.

3.2.2 Steel plate

Part number FZ132-8-Y2 shall be used. Figure 3 shows the detail of the steel plate.

3.2.3 Storage of friction plate and steel plate

To prevent moisture absorption, the friction plate shall be stored in a desiccator at a temperature of 25 ± 5°C and humidity of 40% or less. The steel plate shall be stored in a way that prevents rusting.

Unit: mm

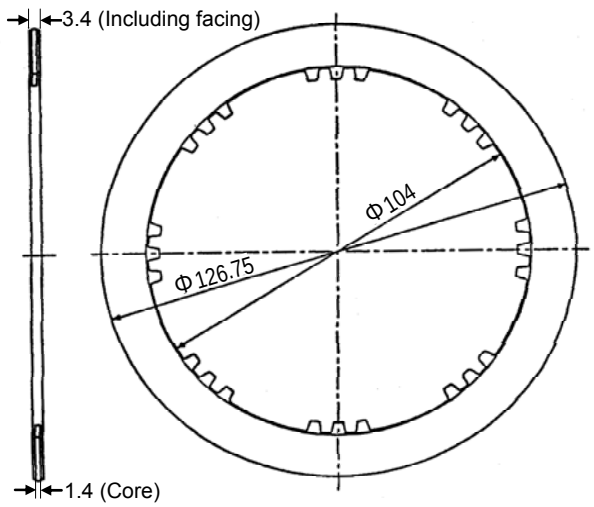

Note: The values for the inner diameter and outer dimension are for the facing.

Figure 2—Friction plate

Unit: mm

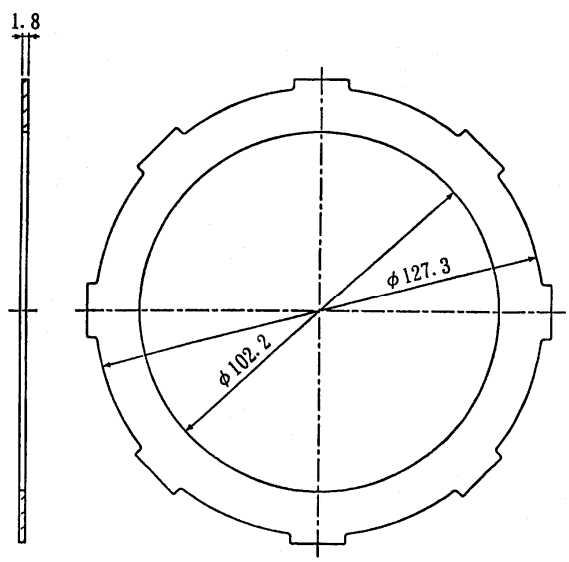

Figure 3—Steel plate

Documents
Document Sharing Hub
Full document details: JASO M349 2012

3.2.4 Fluid under test

In addition to the volume required for the test (150 ± 5 ml), a sufficient quantity of fluid to immerse the friction plate shall also be prepared. For cases when testing cannot proceed due to loss of fluid during endurance testing, refer to **3.3.5**.

3.2.5 Standard fluid

A "standard fluid" refers to an automatic transmission fluid that has been formulated in advance for use as a comparison to the fluid under test. T-III or RTF1 shall be used as standard fluids. **Table 1** lists their representative properties.

Table 1—Representative properties of T-III and RTF1 standard fluids

Standard fluid				T-III	RTF1
Density		g/cm^3	15°C	0.874	0.849
Kinematic viscosity		mm^2/s	40°C	41.5	29.9
			100°C	7.79	6.02
Viscosity index				161	153
Neutralization number	Acid value		mgKOH/g	1.7	0.6
	Base value (using hydrochloric acid)		mgKOH/g	1.4	1.5
	Base value (using perchloric acid)		mgKOH/g	1.8	2.9

3.2.6 Sourcing of friction plate, steel plate, and standard fluid

The friction plate, steel plate, and standard fluid may be sourced from the following companies.

Fuel Team, Raw Materials and Fuels Group, Nissan Trading Co., Ltd.

BELISTA Tower Higashi-atotsuka, 91-1 Kawakami-cho, Totsuka-ku, Yokohama, Kanagawa 244-0805, Japan

FAX.: 81-(0) 45-522-3618

3.3 Test preparation

3.3.1 Friction plate preparation

The friction plate shall be immersed in the fluid under test for at least 30 minutes prior to the test, and then dried with paper towels. The fluid under test used to immerse the friction plate shall not be reused in the test. Next, using a micrometer, measure the thickness to an accuracy of 0.001 mm at four locations 90° apart from each other. Mark the measurement points somewhere other than the friction surface so that the same measurements can be repeated after the test.

3.3.2 Steel plate preparation

The steel plate shall be cleaned of oil using hexane or other organic solvent, and then dried.

3.3.3 Test container cleaning

The test container and jigs shall be cleaned using hexane or other organic solvent, and then dried.

3.3.4 Assembly of friction and steel plates

The friction plate shall be inserted onto the spline shaft and the steel plate attached on the same side as the test container. Take care not to scratch either plate during assembly. While there is no specific assembly orientation for the friction plate, the steel plate shall be oriented as shown in **Figure 4**.

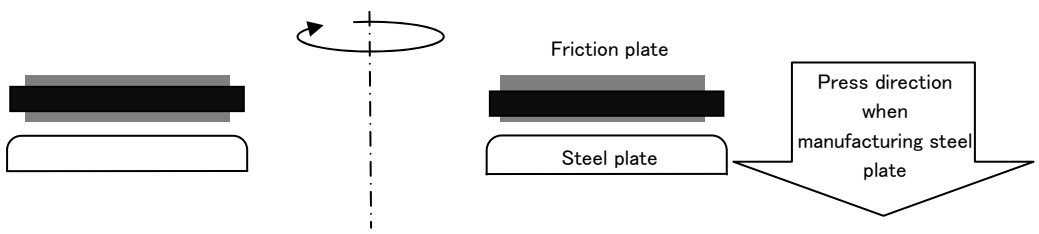

Figure 4—Steel plate orientation (cross section)

Documents
Document Sharing Hub
Full document details: JASO M349 2012

3.3.5 Insertion of fluid under test

Insert 150 ± 5 ml of the fluid under test into the test container. The fluid used to immerse the friction plate shall not be used. Although adding more than the specified amount of fluid under test is permitted only in the case when it is difficult to continue testing due to loss of fluid during endurance testing, topping up the fluid during a test is not permitted. The results for the standard fluid that are to be recorded in the test results shall be obtained using the same quantity of fluid as for the fluid under test.

3.4 Breaking-in procedure

After preparation is complete, breaking-in under the conditions in Table 2 shall be performed using the following procedure.

Table 2—Conditions for breaking-in

Parameter	Condition
Fluid temperature °C	80±5
Contact pressure MPa	1.00±0.05
Slip speed m/s	0.60±0.01
Time min	30

a) Raise the test container until the friction plate comes into contact with the fluid under test and adjust the fluid temperature to be 80 ± 5°C while stirring it (if possible) by rotating the shaft to which the friction plate is fitted. If necessary, additional time shall be taken to allow the fluid temperature to stabilize.

b) Once the specified fluid temperature has been achieved, a contact pressure of 1.00 ± 0.05 MPa shall be applied.

c) The friction plate shall be rotated to achieve a slip speed of 0.60 ± 0.01 m/s.

d) Breaking-in shall continue for 30 minutes while maintaining the fluid temperature at 80 ± 5°C.

3.5 μ-V characteristics measurement procedure

After breaking-in is completed, the coefficient of friction of the fluid under test shall be measured under the conditions specified in **Table 3** using the following procedure. Measure the coefficient of friction successively at temperatures of 40°C, 80°C , and 120°C.

Table 3—μ-V characteristics measurement conditions

Parameter	Condition
Fluid temperature °C	40±5, 80±5, 120±5
Contact pressure MPa	1.00±0.05
Slip speed m/s	Accelerate and decelerate continuously between 0 and 1.5 ± 0.01 (see **Figure 5**)

a) Raise the test container until the friction plate comes into contact with the fluid under test and adjust the fluid temperature to be 40 ± 5°C while stirring it (if possible) by rotating the shaft to which the friction plate is fitted. Once the fluid temperature reaches 40 ± 5°C, wait 5 minutes or more and then halt rotation.

b) A contact pressure of 1.00 ± 0.05 MPa shall be applied, as indicated in **Figure 5**, and then friction plate rotation shall be started and data collection commenced. If the test unit specifications do not allow a slip speed of 1.5 ± 0.01 m/s to be maintained for 1 s, a shorter hold time may be used (0 s is permitted). While a data collection interval of 10 ms or 20 ms is preferred, any interval of between 5 to 20 ms is permitted. After halting the rotation, the applied load shall be released and the friction surface disengaged.

c) After performing the 40°C measurement, the measurement procedure described in **a)** and **b)** shall be repeated for fluid temperatures of 80°C and 120°C.

AVA Documents
Document Sharing Hub
Full document details: JASO M349 2012