Motorcycles - Measurement of noise emitted by accelerating run

Foreword

This Japanese Automobile Standard has been created in accordance with circumstances in Japan and is reference to **ISO 362-2**. Details on the background of **ISO 362-2** revision are provided in **Annex A**. With the issuance of **ISO 362-2**, revision of **United Nations Economic Commission for Europe Regulation No. 41** (hereinafter referred to as **ECE R41-04**), which utilized the test method, has been underway. At the time of this standard issuance, **ISO 362-2** and **ECE R41-04** contained some differences in content; however, **ISO 362-2** is expected to be revised in accordance with **ECE R41-04**. For this reason, care was taken to bring in as much as possible with **ECE R41-04** for the content areas in which **ISO 362-2** and **ECE R41-04** differed and to clearly note the differences so that they are understood. Also, in order to integrate standards for vehicles regarded as motorcycles (including bicyles with engines) in Japan, this standard revision has considered the content of test methods for mopeds (**ISO 9645**), which was not included in the scope of application of **ISO 362-2**.

1 Scope

This standard specifies the engineering methods used to measure noise produced from motorcycles in ordinary urban traffic conditions.

The provisions of this standard are designed to reproduce the level of noise produced from major sources of noise during normal transit in urban areas.

The measurement method is prescribed such that expectations for ease and convenience can be met within limitations that will enable vehicle operating conditions to be reproduced as much as possible.

This test method requires an acoustic environment that can only be obtained by extensive free space. Such conditions are normally used in the following cases:

- Vehicle model certification tests
- Measurements during manufacturing stage
- Measurements at authorized test sites

Note 1: Results obtained with this test method will be objective measurement values of noise produced under prescribed test conditions. However, it is necessary to take into account the fact that subjective evaluations of automobile noise do not simply correlate with the values indicated by a sound level meter. Noise is strongly related to individual sensibilities, physiological conditions, and cultural and ambient conditions, so there can be a large variation. For this reason, it is not an effective parameter for indicating specific vehicle conditions.

Note 2: It should be noted that sampling inspections of randomly selected vehicles are rarely performed in an ideal acoustic environment. If measurements must be taken from a road whose acoustic environment does not meet the requirements prescribed in this standard, it should be understood that the results obtained would deviate somewhat from the results that would have been obtained under the prescribed conditions.

AVA Documents
Document Sharing Hub

Full document details: JASO T008 2010

2 Normative reference

The following standards, when referred to in this standard, constitute a part of the specifications of this standard. If the (Western calendar) year has been added to the normative reference, the version with the noted year shall be applied, while subsequent revised versions (including addenda) shall not be applied. If the year has not been added to the normative reference, the most recently updated version (including addenda) shall be applied.

JIS C 1509-1 Electroacoustics - Sound level meters - Part 1: Specifications

Note: Corresponding international standard: **IEC 61672-1**, Sound level meters (IDT)

JIS C 1515 Electroacoustics - Sound calibrators

Note: Corresponding international standard: **IEC 60942**, Electroacoustics-Sound calibrators (IDT)

JIS D 0109 Motorcycles and mopeds - Vocabulary

JIS D 1000 Motorcycles - Engine test code - Net power

Note: Corresponding international standard: **ISO 4106**, Motorcycles - Engine test code - Net power (MOD)

JIS D 1037 Motorcycles - Measurement of maximum speed

Note: Corresponding international standard: **ISO 7117**, Motorcycles - Measurement method for determining maximum speed (MOD)

JIS D 8301 Acoustics - Specification of test tracks for the purpose of measuring noise emitted by road vehicles (IDT)

Note: Corresponding international standard: **ISO 10844**, Acoustics-Specification of test tracks for the purpose of measuring noise emitted by road vehicles (IDT)

ISO 4164 Road vehicles - Mopeds - Engine test Code - Net power

ISO 5725 Accuracy (trueness and precision) of measurement methods and results

ISO/IEC Guide 98-3:2008 Uncertainty of measurement - Part 3: Guide to the expression of uncertainty in measurement (GUM: 1995)

3 Definitions

Definitions of main terms used in this standard shall be based on **JIS D 0109** and as defined hereinafter.

3.1 Vehicle mass

3.1.1 Empty vehicle mass, m_{kerb}

Total mass obtained when the masses of the following items are added to a finished, shipped vehicle equipped with all of the equipment necessary for normal driving:

- Lubricating oil, coolant (when necessary), and washing liquid
- Fuel (with tank filled to at least 90 % of the manufacturer's prescribed capacity)
- Other equipment included in the vehicle's basic components, such as a spare wheel, wheel blocks, fire extinguisher, spare parts, and onboard tools

3.1.2 Test mass, m_t

Test mass of the vehicle.

Note: In Category L1, according to **United Nations Economic Commission for Europe Regulation No. 63** (hereinafter referred to as **ECE R63-01**), the test mass must be at least 70 kg and not more than 90 kg.

AVA Documents
Document Sharing Hub

Full document details: JASO T008 2010

3.1.3 Operator weight, m_d

Nominal mass of the operator.

3.2 Power to Mass Ratio index, PMR

Dimensionless quantity used when calculating acceleration from the following equation:

$$\mathrm{PMR} = \frac{P_n}{m_t} \times 1000 \qquad (1)$$

where P_n is the rated engine power prescribed in **JIS D 1000**.

Note: The rated engine power output for categories L1 and L2 is prescribed in **ISO 4164**.

3.3 Rated engine speed,[1)] *S*

Engine speed at the rated maximum power prescribed by the manufacturer.

Note: [1)]

When the rated maximum power is reached at multiple engine speeds, this is the highest of those engine speeds according to this regulation.

3.4 Vehicle category

3.4.1 Category L

3.4.1.1 Categories L1 and L2

L1: Motorcycle whose maximum engine displacement is not more than 50 cm^3, or whose maximum continuous rated power is 4 kW or less if the motor is electric, and whose maximum vehicle speed is 50 km/h or less.

L2: Three-wheeled vehicle whose engine displacement is not more than less than 50 cm^3 if equipped with a spark-ignition engine, whose maximum net power is 4 kW or less if equipped with another type of internal combustion engine, or whose maximum continuous rated power is 4 kW or less if equipped with an electric motor, and whose maximum vehicle speed is 50 km/h or less.

3.4.1.2 Category L3

Motorcycle whose engine displacement exceeds 50 cm^3 or whose maximum vehicle speed exceeds 50 km/h.

3.4.1.3 Category L4

Three-wheeled motor vehicle whose engine displacement exceeds 50 cm^3 or whose maximum vehicle speed exceeds 50 km/h, and whose wheels are attached asymmetrically with respect to the vehicle's longitudinal axis.

3.4.1.4 Category L5

Three-wheeled motor vehicle whose engine displacement exceeds 50 cm^3 or whose maximum vehicle speed exceeds 50 km/h, whose rated gross vehicle weight does not exceed 1000 kg and whose wheels are attached symmetrically with respect to the vehicle's longitudinal axis.

3.5 Reference point

Front end of the vehicle.

3.6 Target acceleration, a_{urban}

Acceleration under partial throttle conditions in urban traffic. Derived from statistical surveys.

3.7 Reference acceleration, $a_{wot\ ref}$

Acceleration required for an acceleration test on a test road.

3.8 Gear ratio weighting factor, *k*

Dimensionless quantity used in connection with acceleration tests and constant-speed tests for combining the

AVA Documents
Document Sharing Hub
Full document details: JASO T008 2010

results of two gear ratio tests.

3.9 Partial power factor, k_p

Dimensionless quantity used for weighting and combining the results from acceleration tests and constant speed tests.

3.10 Preliminary acceleration

Fully opening the throttle before starting point of test in order to achieve stable acceleration in test section.

Note: See **Figure 1** for more details.

3.11 Gear ratio locking

Controlling the transmission so that the gears cannot shift during testing.

3.12 Engine

Power source whose accessories cannot be removed.

3.13 Latter half test road length, l_{10}

Test road length used to calculate the acceleration from between microphones to end line of test.

3.14 Total test road length, l_{20}

Test road length used to calculate the acceleration from start to end line of test.

4 Symbols and units

Table 1 shows symbols that are used in this standard, as well as the section in which they first appear.

Table 1 Symbols used and corresponding sections

Symbol	Unit	Section	Explanation
AA'	-	3.10	Line perpendicular to the direction of vehicle travel that indicates the start of the test road for recording the noise level during the test
$a_{wot\ i}$	m/s²	5.1	Acceleration with the throttle fully open in *i*th gear
$a_{wot\ (i+1)}$	m/s²	5.1	Acceleration with the throttle fully open in (*i*+1)th gear
$a_{wot\ test}$	m/s²	5.1	Acceleration with the throttle fully open during a single gear test
$a_{wot\ ref}$	m/s²	5.4	Reference acceleration for a full throttle test
a_{urban}	m/s²	5.3	Target acceleration equivalent to the acceleration in urban area travel
BB'	-	3.10	Line perpendicular to the direction of vehicle travel that indicates the end of the test road for recording the noise level during the test
CC'	-	8.1	Vehicle travel line that passes through the test road prescribed in **JIS D 8301**
δ_1 -δ_7	dB	B.2	Input quantity used for taking uncertainty into account
j	-	5.2.1	First, second, or other ordinal number corresponding to the number of test runs for a series of acceleration or constant speed tests
k_P	-	3.9	Partial power factor
k	-	3.8	Gear ratio weighting factor
l_{ref}	m	5.1	Reference length
l_{veh}	m	5.1	Vehicle length
l_{10}	m	3.13	Test road length used to calculate the acceleration from between microphones to end point of test.

Documents
Document Sharing Hub
Full document details: JASO T008 2010

Table 1 Symbols used and corresponding sections (continued)

Symbol	Unit	Section	Explanation
l_{20}	m	3.14	Test road length used to calculate the acceleration from start to end point of test.
$L_{crs\ (i)}$	dB	8.4.3.2	Noise level of a vehicle during a constant speed test in *i*th gear
$L_{crs\ (i+1)}$	dB	8.4.3.2	Noise level of a vehicle during a constant speed test in (i+1)th gear
$L_{crs\ rep}$	dB	8.4.3.2	Reported value for the noise level of a vehicle during a constant speed test
$L_{wot\ \ (i)}$	dB	8.4.3.2	Noise level of a vehicle during a full throttle test in *i*th gear
$L_{wot\ \ (i+1)}$	dB	8.4.3.2	Noise level of a vehicle during a full throttle test in (*i*+1)th gear
$L_{wot\ rep}$	dB	8.4.3.2	Reported value for the noise level of a vehicle during a full throttle test
L_{urban}	dB	8.4.2	Reported value for the noise level of a vehicle equivalent to urban area operation
m_d	kg	3.1.3	Mass of the operator
m_{kerb}	kg	8.2.2	Mass of the empty vehicle
m_{ref}	kg	8.2.2	Empty vehicle mass + Operator's equivalent mass of (75 ±5) kg
m_t	kg	3.1.2	Test mass of the vehicle
$n_{PP'}$	1/min	9	Engine speed of the vehicle when its front end passes between microphones
$n_{BB'}$	1/min	9	Engine speed of the vehicle when its rear end passes end line of test
PMR	-	3.2	Power to Mass Ratio (PMR) index used in calculations
P_n	kW	3.2	Rated engine power output
PP'	-	3.13	Line perpendicular to the direction of vehicle travel that indicates the position of the microphone
S	1/min	3.3	Rated engine speed in units of 1/min. Synonymous with the engine speed at maximum power output.
$v_{AA'}$	km/h	5.1	Speed of the vehicle when its front end passes start line of test
$v_{BB'}$	km/h	5.1	Speed of the vehicle when its rear end passes end line of test
v_{max}	km/h	8.3.1.2	Maximum vehicle speed prescribed in **JIS D 1037**
$v_{PP'}$	km/h	5.1	Speed of the vehicle when its front end passes line between microphones
v_{test}	km/h	8.3.1.2	Target test vehicle speed
MT	-	Annex D	Manual transmission
AT	-	Annex D	Automatic transmission
CVT	-	Annex D	Continuously variable transmission

5 Measuring instrumentation

5.1 Sound level meter

5.1.1 General

The device used to measure the noise level shall be a sound level meter or equivalent measuring device that

AVA Documents
Document Sharing Hub
Full document details: JASO T008 2010

meets the requirements for Class 1 prescribed in **JIS C 1509-1**, including cases in which a windscreen recommended by the manufacturer is used.

The entire measuring device shall be calibrated with a sound calibrator that meets the requirements for Class 1 prescribed in **JIS C 1515**.

Measurements shall be taken using dynamic characteristics F and frequency correction curve for characteristics A of a sound level meter prescribed in **JIS C 1509-1**. If using a measuring device that monitors the noise level periodically, readings shall be taken at sampling intervals of 30 ms or shorter.

The measuring device shall be maintained and calibrated in accordance with the manufacturer's instructions.

5.1.2 Calibration

At the beginning and end of every series of measurements, the entire sound level meter shall be calibrated with a sound calibrator as prescribed in **5.1.1**. The difference from an unadjusted calibration reading shall not exceed 0.5 dB. If that value is exceeded, the measurement results obtained since the last satisfactory calibration shall be regarded as invalid.

5.1.3 Verification

Verification of the sound calibrator shall be certified in accordance with the requirements of **JIS C 1515** once a year. Also, measuring devices shall be certified in accordance with the requirements of **JIS C 1509-1** at least once every two years. All verifications shall be made in accordance with appropriate standards by a test laboratory that is authorized to perform calibrations.

5.2 Engine speed and vehicle speed measuring devices

Engine speed shall be measured with a device whose minimum accuracy is ±2 %.

When a continuous measuring device is used, vehicle speed shall be measured with a device whose minimum accuracy is ±0.5 km/h.

When testing by independent vehicle speed measurements, the vehicle speed measuring device shall have a minimum accuracy of ±0.2 km/h.

Note: Independent vehicle speed measurements are measurements of $v_{AA'}$, $v_{BB'}$, and $v_{PP'}$ values taken by at least two separate devices. With a continuous measuring device, all necessary vehicle speed information is measured with one device.

5.3 Meteorological instrument

Weather observation devices used to monitor ambient conditions during testing shall meet the following accuracy specifications:

- Temperature measuring device (thermometer): Within ±1°C
- Wind speed measuring device (anemometer): Within ±1.0 m/s
- Atmospheric pressure measuring device (barometer): Within ±5 hPa
- Relative humidity measuring device (hygrometer/psychrometer): Within ±5 %

6 Acoustic environment, climatic conditions, and background noise

6.1 Test road

Within a radius of 50 meters from the center of the test road, the area shall be free of fences, boulders, bridges, buildings, and other large reflecting objects. The surface of the test road shall be dry and free of powdery snow,

Documents
Document Sharing Hub

Full document details: JASO T008 2010

rock chips, and other sound-absorbing materials.

Layout of test road is shown in Figure 1.

The area near the microphone shall be free of objects that will affect the sound field, and there shall be no persons between the microphone and sound source. The person reading the meter shall be in a position that will not affect the readings.

Note: Reflected sound, even from a building that is beyond the 50-meter radius, can have a serious effect if it becomes concentrated in the test road.

Unit: m

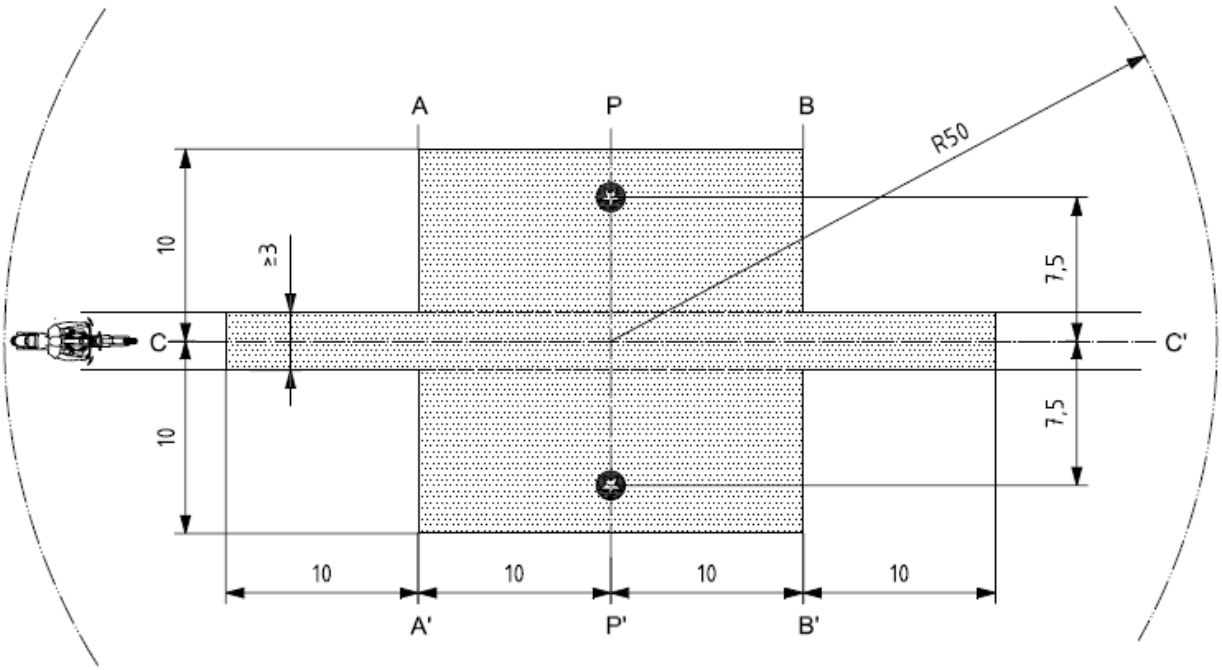

Test road's minimum area, namely, the test area

✪ Microphone position (height: 1.2 m)

AA' Start line of test section

BB' Finish line of test section

CC' Vehicle travel line passing through test section

PP' Line perpendicular to vehicle passing between microphone positions

R50 50 m radius from center of test road

Note: The shaded portion (test area) indicates the minimum area of the surface that must be paved as prescribed in **JIS D 8301**.

Figure 1 Dimensions of test road

6.2 Climatic conditions

Meteorological instrument shall be used to collect data that is representative of the test road, and shall be placed near the test road at the height of the microphone.

Measurements shall be taken when the ambient air temperature is between 5°C and 40°C.[2)]

Documents
Document Sharing Hub

Full document details: JASO T008 2010

When measuring noise, do not conduct testing when the speed of the wind, including gusts, exceeds 5 m/s at microphone height.

When measuring noise, record typical values for the temperature, wind speed, wind direction, relative humidity, and atmospheric pressure.

Note: For information on the effects of temperature and other factors, see **Annex B**.

Note: [2)]

ECE R41-04 specifies a range from 5°C to 45°C, while this standard specifies a range from 5°C to 40°C as in **ISO 362-2**.

6.3 Background noise

Peaks that are unrelated to a vehicle's general noise level characteristics shall be ignored when measured values are being read.

Background noise shall be measured for 10 seconds immediately before and immediately after a series of vehicle tests. These measurements shall be taken from the same positions and with the same microphones used during vehicle testing. The maximum noise level value shall be reported.

Background noise (including wind noise) shall be at least 10 dB lower than the noise level produced from the vehicle during testing. In order to calculate the *j*th test result when the difference between the background noise level and measured noise level is 10 dB to 15 dB, the appropriate correction value shown in **Table 2** shall be subtracted from the reading of the sound level meter.

Table 2 Correction values applied to individual measured values

Difference between background noise and measured noise, dB	10	11	12	13	14	15 minimum
Correction value, dB	0.5	0.4	0.3	0.2	0.1	0.0

7 Specification of category L3 vehicle (PMR > 25) acceleration

7.1 General

All acceleration shall be calculated using multiple vehicle speeds on a test road. Values $a_{wot\ i}$, $a_{wot\ (i+1)}$, and $a_{wot\ test}$ shall be calculated using the equations shown in **7.2**. The speed of a vehicle when it passes reference point AA' or PP' shall be defined as vehicle speed $v_{AA'}$ at AA' or vehicle speed $v_{PP'}$ at PP'. The speed of a vehicle when its rear end passes BB' shall be defined as vehicle speed $v_{BB'}$ at BB'. The method used to determine the acceleration shall be indicated in the test report.

If the vehicle's front end is used as the reference point, l_{ref} will be the same as vehicle length l_{veh}.

The dimensions of the test road shall be used in the acceleration calculation. These dimensions shall be defined as follows:

l_{20} = 20 m, l_{10} = 10 m

Since various techniques are available, it is necessary to consider various calculation methods. For example, the gear ratio can be locked by electronic control, even with a continuously variable transmission. These requirements can be accommodated by using several applicable acceleration calculation methods.

7.2 Calculating the acceleration

7.2.1 Calculation procedure for vehicle equipped with transmission that can lock gear ratio

Documents
Document Sharing Hub

Full document details: JASO T008 2010

The value of $a_{\text{wot test}}$ used for gear selection is the average of three[3)] $a_{\text{wot test},\,j}$ values from valid test runs.
[Refer to equation (2)]

$$a_{\text{wot test},\,j} = \frac{\left(v_{\text{BB'},\,j}/3.6\right)^2 - \left(v_{\text{AA'},\,j}/3.6\right)^2}{2\left(l_{20} + l_{\text{ref}}\right)} \quad \text{----------} \quad (2)$$

Preliminary acceleration can be utilized.

Note: [3)]

ISO 362-2 specifies the use of four average values, while this standard, similar to **ECE R41-04**, specifies the use of three average values.

7.2.2 Calculation procedure for vehicle equipped with transmission that cannot lock gear ratio

The value of $a_{\text{wot test}}$ used for gear selection is the average of three[4)] $a_{\text{wot test},\,j}$ values from valid test runs.

In order to achieve the test requirements when the transmission's operation can be controlled by means of a device or measure prescribed in **8.3.1.3.3**, $a_{\text{wot test},\,j}$ is calculated using equation (2).

Preliminary acceleration shall not be utilized[4)].

Note: [4)]

ISO 362-2 permits the utilization of preliminary acceleration, while this standard, similar to **ECE R41-04**, does not permit the utilization of preliminary acceleration.

If a device or measure prescribed in **8.3.1.3.3** is not utilized, $a_{\text{wot test},\,j}$ is calculated using equation (3).

$$a_{\text{wot test},\,j} = \frac{\left(v_{\text{BB'},\,j}/3.6\right)^2 - \left(v_{\text{pp'},\,j}/3.6\right)^2}{2\left(l_{10} + l_{\text{ref}}\right)} \quad \text{----------} \quad (3)$$

Preliminary acceleration shall not be utilized.

Note: With this type of vehicle, recording the vehicle speed at AA', PP', and BB' will provide valuable information for use when this standard is revised in the future.

7.3 Calculating the target acceleration

From equations (4) or (5), a_{urban} is calculated as follows:

$$a_{\text{urban}} = 1.37\log(\text{PMR}) - 1.08 \quad \text{for } 25 < \text{PMR} \le 50 \quad \text{----------} \quad (4)$$

$$a_{\text{urban}} = 1.28\log(\text{PMR}) - 1.19 \quad \text{for PMR} > 50 \quad \text{----------} \quad (5)$$

7.4 Calculating the reference acceleration

From equations (6) or (7)T, $a_{\text{wot ref}}$ is calculated as follows:

$$a_{\text{wot ref}} = 2.47\log(\text{PMR}) - 2.52 \quad \text{for } 25 < \text{PMR} \le 50 \quad \text{----------} \quad (6)$$

$$a_{\text{wot ref}} = 3.33\log(\text{PMR}) - 4.16 \quad \text{for PMR} > 50 \quad \text{----------} \quad (7)$$

Note: The calculation of $a_{\text{wot ref}}$ and a_{urban} for specific vehicles is based on statistical analyses of actual travel data. For this reason, it does not involve calculating the acceleration physically from the PMR.

7.5 Partial power factor, k_p

Partial power factor k_p is expressed as following equation (8):

Documents
Document Sharing Hub
Full document details: JASO T008 2010