Automotive parts - Non lead wheel balance weights

- Part 1: Clip type

1. Scope

This standard specifies lead free wheel balance weights (hereinafter referred to as balance weights), specifically, clip type balance weights, for automobiles.

2. Normative reference

The following standards, when referred to in the standard, constitute a part of the specifications of this standard. As required, the most recently updated version of the applicable standard (including addenda) shall be applied.

JIS D4218	Automobile parts -- Wheels -- Contours of rims
JIS Z2371	Methods of salt spray testing
ISO 13988	Passenger vehicles wheels - Clip balance weight and rim flange nomenclature, test procedures and performance requirements
JATMA Year Book	

3. Types

The type of balance weight varies depending on the type of wheel used as shown in **Table 1**. See **JIS D4218** or the **JATMA Year Book** for the nominal rim diameters.

4. Designation of each part

The names of the portions of the balance weight shall be as shown in **Figure 1**.

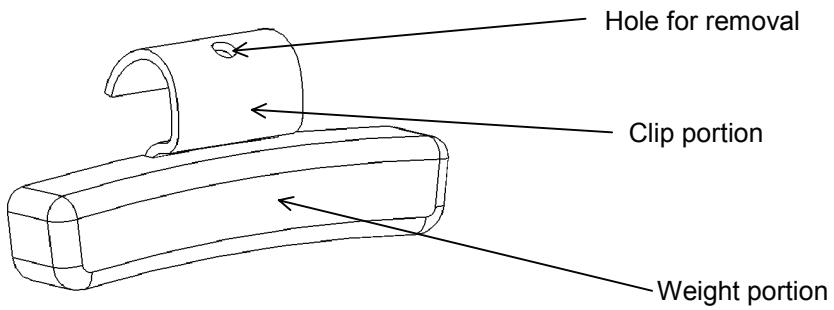

Note: The shape shown in the figure is an example.

Figure 1 Clip type balance weight

5. Mass

The mass classification for balance weights shall be as shown in **Table 1**.

Documents
Document Sharing Hub

Full document details: JSAE C305-1 2009

Table 1 Clip type balance weight types

Unit: g

Wheel material	Applicable rim		Wheel reference information				Balance weight					
							Type and mass			Retention performance		
										Detachment force [a]		Tangential force (N) (min.)
	Type	Mark	Type symbol	Use	Nominal rim diameter	Rim thickness (clip mounting portion)	Type symbol	Mass (g)	Tolerance (g)	Pull-off force (N) (min.)	Detaching torque (Nm) (min.)	
Steel	5° drop center rim	5° DC	P1	Mini cars, light trucks	10, 12 to 14	1.8 to 2.6	BP	5	±1	50	1	60
								10		100	1	100
								15	±1.5	100	1	100
			P2	Passenger cars	13 to 18	1.8 to 3.8		20		150	1.5	100
								25		150	1.5	100
								30		150	1.5	100
								35	±2	150	1.5	100
								40		200	2	100
								45	±2.5	200	2	100
								50		200	2	100
								55		200	2	100
								60		200	2	100
			T1	Light trucks and small buses, or trucks and buses	13 to 18	3.5 to 5.5	BT1	5	±1	50	1	60
								10		100	1	100
								15	±1.5	100	1	100
	Shallow drop center rim	SDC				4.5 to 6.0		20		150	1.5	100
								25		150	1.5	100
								30		150	1.5	100
	15° drop center rim	15° DC			17.5 [b]	4.0 to 6.5		35	±2	150	1.5	100
								40		200	2	100
								45	±2.5	200	2	100
								50		200	2	100
								55		200	2	100
								60		200	2	100
								80	±4	200	2	100
								100		300	2	100
			T2	Trucks, buses	17.5 [b] 19.5 22.5	4.0 to 6.5	BT2	50	—			
								100				
								150				
								200				
								250				
	Wide base drop center rim	IR, IRA			18 20	6.0 to 9.0	—					
Light alloy	5° drop center rim	5° DC	A1	Mini cars, passenger cars	13 to 20	3.5 to 7.0	BA	5	±1	50	1	60
								10		100	1	100
								15	±1.5	100	1	100
			A2	Light trucks and small buses, or trucks and buses	15 to 20	6.0 to 7.0		20		150	1.5	100
								25		150	1.5	100
								30		150	1.5	100
								35	±2	150	1.5	100
								40		200	2	100
								45	±2.5	200	2	100
								50		200	2	100
								55		200	2	100
								60		200	2	100
	15° drop center rim	15° DC	—		17.5 19.5 22.5	6.0 to 10.0	—					

Note: a)
Pull-off force or detaching torque may be selected through discussions between the supplying and receiving parties concerned.
Note: b)
For these rim diameters, it is recommended to use weights indicated with type symbol BT1 for which standardization has been completed.

AVA Documents
Document Sharing Hub
Full document details: JSAE C305-1 2009

6. Performance

6.1 Retention performance

6.1.1 Detachment force

The force for detaching a balance weight from a rim shall be such that, when the test specified in **9.2.1** or **9.2.2** is conducted, the values specified in **Table 1** are satisfied.

6.1.2 Tangential force

The force for moving a balance weight in the tangential direction shall be such that, when the test specified in **9.3** is conducted, the value specified in **Table 1** are satisfied.

6.2 Corrosion resistance

The corrosion resistance of clip and weight portions in an assembled state shall be such that, when the test specified in **9.4** is conducted, it will take 96 hours or more to develop red rust. In cases where higher corrosion resistance is required, corrosion resistance specifications shall be as agreed upon between the supplying and receiving parties concerned.

7. Appearance

Appearance shall be as specified below.

a) The balance weight shall be free from cracks, pinholes, shrinkage, flaws, or other defects that will adversely affect strength.

b) The clip portion shall be free from detrimental flaws or burrs.

8. Materials

The materials shall be as specified below.

a) Weight portion: The materials for the weight portion shall be free from lead.

b) Clip portion: The materials for the clip portion shall be free from lead.

9. Tests

9.1 Preparation of balance weights for tests

Test preparation shall be conducted as specified in **5.3** of **ISO 13988**.

9.2 Detachment force test

9.2.1 Pull-off force test

A pull-off force test shall be conducted to measure the force required to detach a balance weight from the rim. Three or more test pieces shall be measured. Mount a balance weight on the rim of a disc wheel, apply a force (F) to the center of the clip in the direction shown in **Figure 2** as slowly as possible, and measure the force (N) required to detach the weight from the rim.

Documents
Document Sharing Hub

Full document details: JSAE C305-1 2009

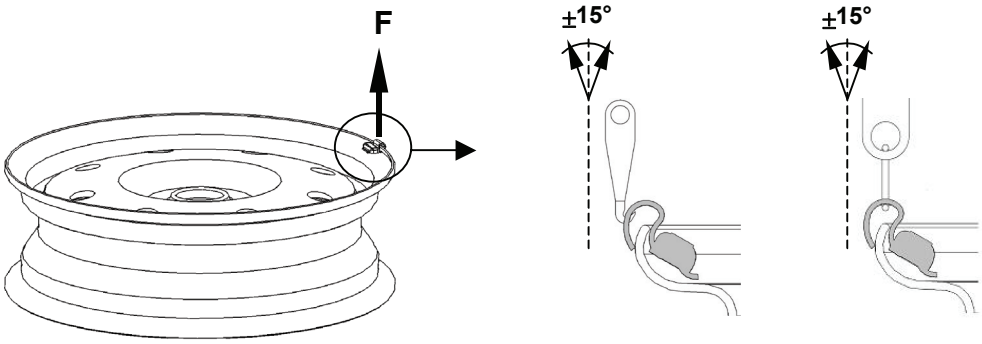

Figure 2 Pull-off force test

9.2.2 Detaching torque test method

A rotary torque test shall be conducted to measure the force required to detach a balance weight from the rim. Three or more test pieces shall be measured. Mount a balance weight on the rim of a disc wheel, mount a special jig to the clip, apply a force (F) to point L that is a certain distance away from the supporting point in the direction shown in **Figure 3** as slowly as possible, and measure the torque (Nm) required to detach the weight from the rim.

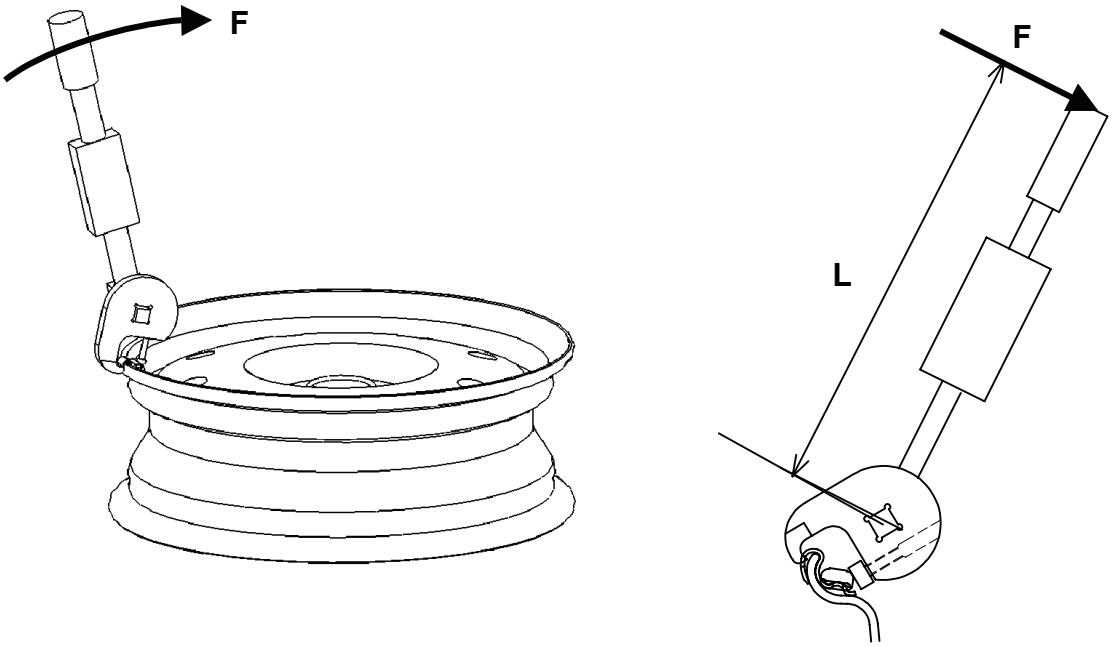

Figure 3 Detaching torque test

9.3 Tangential force test

A tangential force test shall be conducted to measure the force required to move a balance weight in the tangential direction. Three or more test pieces shall be measured. Mount a balance weight on the rim of a disc wheel, apply a force (F) to the side surface of the end portion of the weight in the direction shown in **Figure 4** as slowly as possible, and measure the force (N) required for moving the weight in the tangential direction.

Documents
Document Sharing Hub
Full document details: JSAE C305-1 2009

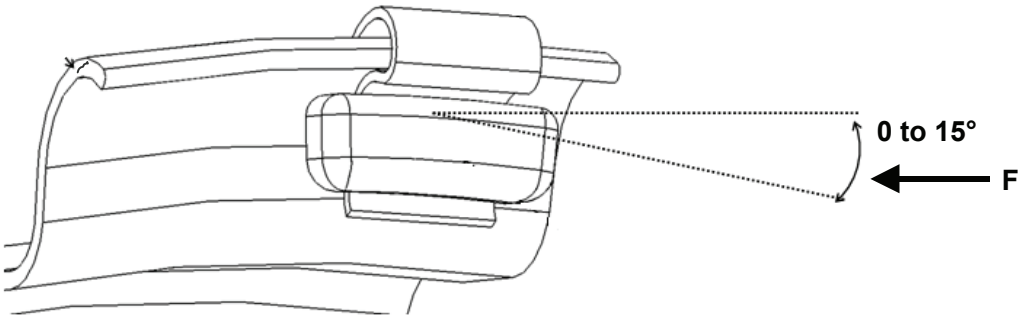

Figure 4 Tangential force test

9.4 Salt spray test

A salt spray test shall be conducted as specified in **JIS Z2371**.

10. Inspection

Inspection shall be conducted as specified below, and inspection methods shall be as agreed upon between the supplying and receiving parties concerned.

a) Mass: The specifications of section **5** shall be satisfied.

b) Performance inspection: The specifications of section **6** shall be satisfied.

c) Appearance inspection: The specifications of section **7** shall be satisfied.

11. Markings

The following markings shall be made on balance weights by casting or engraving.

a) Mass: Mass shall be expressed by numerals in grams.

b) Other: Other items shall be as agreed upon between the supplying and receiving parties concerned.

Reference standards:

JASO C303	Wheel Balancing Weights for Automotives
JASO C614	Automobile Parts - Disc Wheels
JASO T206	Motorcycles - Wheel balancing weights

Documents
Document Sharing Hub

Full document details: JSAE C305-1 2009

JIS D4102 Wheels and rims for pneumatic tyres - Vocabulary, designation and marking

Documents
Document Sharing Hub

Full document details: JSAE C305-1 2009