Automotive parts - Engine EGR cooler - Heat dissipation test methods

1. Scope

This standard specifies the test method for evaluating the heat dissipation performance of water-cooled EGR coolers used in automobile internal combustion engines.

2. Definitions

Definitions of main terms used in this standard shall be as follows.

2.1 EGR

A technology that recirculates a portion of an engine's exhaust gas back into the intake to control the concentration of oxygen taken into the engine.

Note: EGR stands for "Exhaust Gas Recirculation".

2.2 EGR gas

Gas that has been extracted from the exhaust gas and is passed through the EGR cooler core.

2.3 Test gas

The air used in place of real EGR gas during the heat dissipation performance test and when measuring EGR gas pressure loss.

2.4 EGR cooler

A water-cooled heat exchanger for cooling the EGR gas.

2.5 EGR gas heat dissipation amount

The amount of heat lost by the test gas during the heat dissipation performance test.

Note: The EGR gas heat dissipation amount is expressed in kilowatts (kW).

2.6 EGR cooler heat dissipation amount

The amount of heat lost after the EGR gas heat dissipation amount is corrected for the difference in inlet temperature between both fluids as defined upon agreement by all concerned parties.

Note: The EGR cooler heat dissipation amount is expressed in kilowatts (kW).

2.7 Difference in inlet temperature between both fluids

The difference between the inlet temperature of the test gas and the cooling water that pass through the EGR cooler core.

Note: The difference in inlet temperature between both fluids is expressed in degrees Celsius (°C).

2.8 EGR gas temperature efficiency

The ratio of the temperature difference between the outlet and inlet EGR cooler test gas with respect to the difference in inlet temperature between both fluids.

Note: The EGR gas temperature efficiency is expressed as a percentage (%).

2.9 EGR gas pressure loss

The total difference in test gas pressure between the EGR cooler outlet and inlet when no heat is being dissipated.

Note: The EGR gas pressure loss is expressed in kilopascals (kPa).

AVA Documents
Document Sharing Hub

Full document details: JSAE E407 2013

2.10 Cooling water pressure loss

The total difference in cooling water pressure between the EGR cooler outlet and inlet.

Note: The cooling water pressure loss is expressed in kilopascals (kPa).

2.11 EGR gas mass flow rate

The mass flow rate of the test gas that passes through the EGR cooler core.

Note: The test gas mass flow rate is expressed in grams per second (g/s), kilograms per hour (kg/h), or kilograms per minute (kg/min).

2.12 Cooling water volumetric flow rate

The volumetric flow rate of the cooling water that passes through the EGR cooler core.

Note: The cooling water volumetric flow rate is expressed in liters per minute (L/min).

2.13 Core

The part at which heat is exchanged between the EGR gas and cooling water.

3. Test items

This test evaluates the following items.

a) EGR gas heat dissipation amount or EGR gas temperature efficiency

b) EGR gas pressure loss

c) Cooling water pressure loss

Documents
Document Sharing Hub

Full document details: JSAE E407 2013

4. Test conditions

The EGR cooler, test gas, cooling water, and test location conditions are shown as follows.

a) EGR cooler

The EGR cooler consists of main components such as the core, tank, flanges, and pipes, as well as supplementary parts. An example is shown in Figure 1.

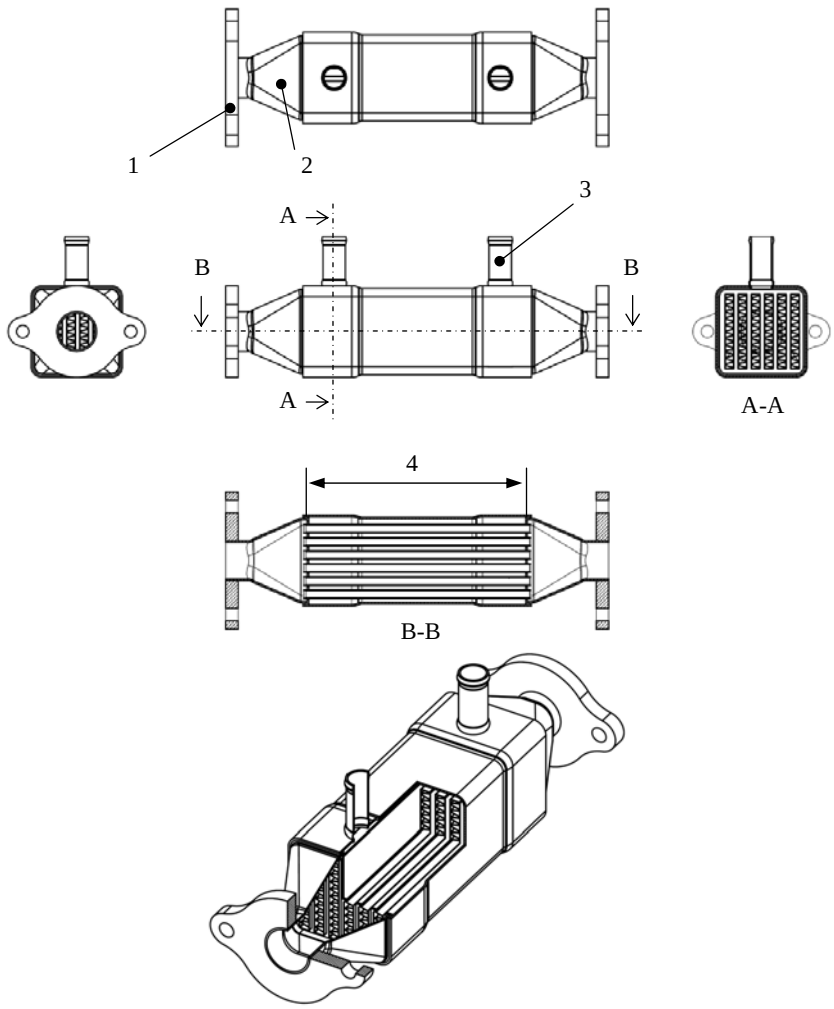

1: Flange
2: Tank
3: Pipe
4: Core

Figure 1 EGR cooler (example)

b) Test gas

Tests shall be run with a test gas inlet temperature and mass flow rate that is defined upon agreement by all concerned parties.

c) Cooling water

Tap water shall be used and tests are to be run with a cooling water inlet temperature and volumetric flow rate that is defined upon agreement by all concerned parties.

d) Test location

Unless otherwise specified, the test location shall be kept at room temperature (5 to 35°C) and normal humidity (45 to 85%)

Documents
Document Sharing Hub
Full document details: JSAE E407 2013

4.1 Test equipment

4.1.1 General test equipment

The test equipment shall be set up so that it can accurately measure the measurement items in section **5.1**. From the perspective of the test gas side structure, the test equipment can be roughly divided into two types: open types, and sealed types. Both types consist of test gas and cooling water circuits and examples are shown in **Figures 2 and 3**. For sealed type test equipment, the test gas inlet pressure shall be set upon agreement by all concerned parties.

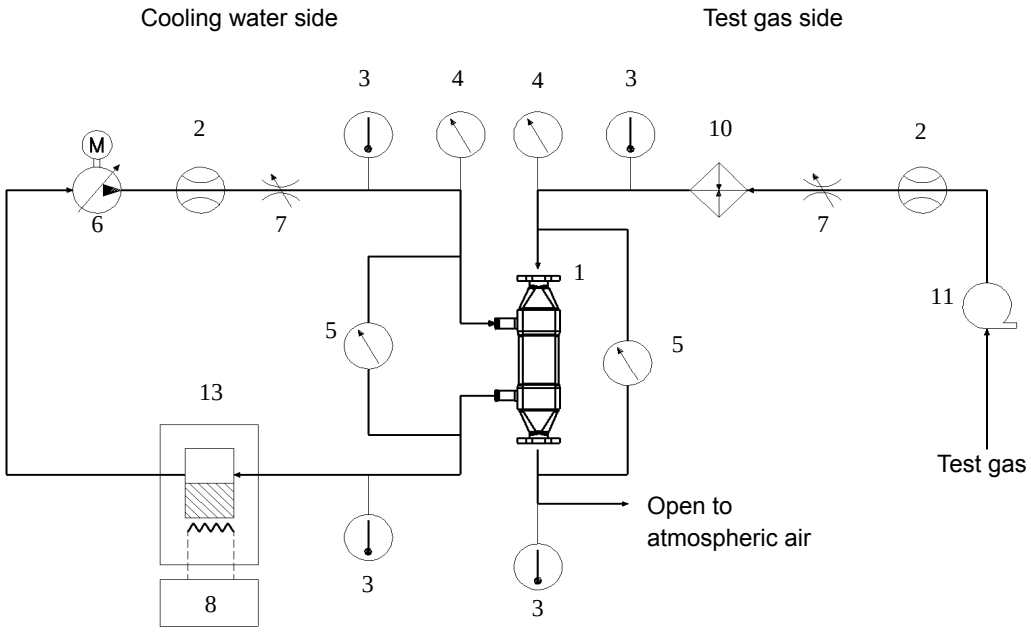

Figure 2 Test equipment (open type)

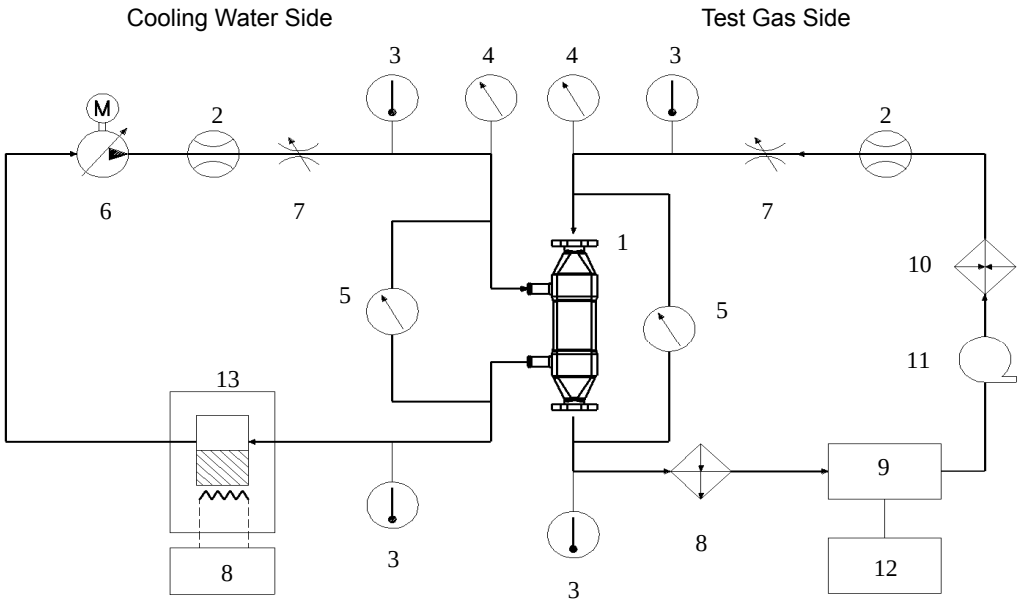

1: EGR cooler
2: Flow meter
3: Thermometer
4: Pressure gauge
5: Differential pressure gauge
6: Pump
7: Flow control valve
8: Temperature controller
9: Pressure regulator
10: Heater
11: Blower
12: Compressor
13: Hot water tank

Figure 3 Test equipment (sealed type)

Documents
Document Sharing Hub
Full document details: JSAE E407 2013

4.1.2 Test gas circuit equipment

The test gas circuit equipment shall be setup as follows.

a) The flow rate of the test gas that passes through the EGR cooler shall be adjustable.

b) The test gas inlet temperature shall be adjustable over the entire range of the test.

c) The test gas inlet pressure and test gas outlet/inlet differential pressure measuring instrument shall not be affected by dynamic pressure and shall be connected so as not to disturb the flow of test gas as much as possible.

4.1.3 Cooling water circuit equipment

The cooling water circuit equipment shall be setup as follows.

a) The volumetric flow rate of the cooling water that passes through the EGR cooler shall be adjustable.

b) The cooling water circuit piping and hot water tank shall be designed not to take in any air or steam, or there should be a separation tank.

c) The cooling water pump shall be designed so that cavitation does not occur.

d) The hot water tank shall be able to dissipate the amount of heat it receives and shall be adjustable over the entire range of the EGR cooler heat dissipation.

4.2 Measuring instruments

Instrumental errors of measuring instruments used in the test shall be within the values shown in **Table 1** for both the test gas and the cooling water sides. Calibration shall be carried out prior to testing.

Table 1 Measuring instrument error

Measuring instrument	Instrumental error
Test gas flow meter	±2% of the measured value
Cooling water flow meter	±2% of the measured value
Test gas inlet thermometer	±(0.3+0.005×Measured temperature)°C
Test gas outlet thermometer	±1.5°C
Cooling water thermometer	±0.3°C
Differential pressure gauge	±2% of the full scale[a)]
Pressure gauge	±2% of the full scale[a)]
Note:[a)] Differential pressure gauge and pressure gauge full scales that are close to the actual measurement value should be used.	

5. Test and measurement methods

5.1 Test method

In the same manner as the examples of the test equipment shown in **Figures 2 and 3**, the EGR cooler should be connected to both the test gas and cooling water circuits. The test and measurement methods are shown as follows.

a) Measurement of flow rate, temperature, and cooling water pressure that is required to calculate both EGR cooler heat dissipation and cooling water pressure loss shall be carried out while the EGR cooler is in a state where it is dissipating heat. Measurement of the test gas outlet/inlet differential pressure shall also be carried out at this time. Items to be measured during the test are shown in **Table 2**.

Documents
Document Sharing Hub
Full document details: JSAE E407 2013

Table 2 Items to be measured (when testing for EGR cooler heat dissipation amount and cooling water pressure loss)

Measurement item	Unit
Atmospheric pressure	Pa
Test laboratory temperature and humidity	°C, %
Test gas inlet temperature	°C
Test gas outlet temperature	°C
Test gas inlet pressure	kPa
Test gas outlet/inlet differential pressure	kPa
Test gas flow rate	m^3/h
Cooling water inlet temperature	°C
Cooling water outlet temperature	°C
Cooling water inlet pressure	kPa
Cooling water outlet/inlet differential pressure	kPa
Cooling water volumetric flow rate	L/min

b) Measurement of flow rate and test gas pressure that is required to calculate EGR gas pressure loss shall be carried out while the EGR cooler is in a state where it is not dissipating heat. The temperature of the cooler when it is not dissipating heat shall be decided upon agreement by all concerned parties. Items to be measured during the test are shown in **Table 3**.

Table 3 Items to be measured (When testing for EGR gas pressure loss)

Measurement item	Unit
Atmospheric pressure	Pa
Test laboratory temperature and humidity	°C, %
Test gas inlet temperature	°C
Test gas outlet temperature	°C
Test gas inlet pressure	kPa
Test gas outlet/inlet differential pressure	kPa
Test gas flow rate	m^3/h

Documents
Document Sharing Hub
Full document details: JSAE E407 2013