Standard test method for metal on metal friction characteristics of belt CVT fluids

1. Scope

This standard specifies the test method for measuring the metal on metal coefficient of friction for metal belt continuously variable transmission (hereinafter referred to as "CVT") fluids.

2. Normative reference

The following standards contain which, through reference in this Standard, constitute provisions of this Standard. The most recent edithions of the standard indicated below shall be applied.

ASTM D3704 Standard Test Method for Wear Preventive Properties of Lubricating Greases Using the (Falex) Block on Ring Test Machine in Oscillating Motion

ASTM G77 Standard Test Method for Ranking Resistance of Materials to Sliding Wear Using Block-on-Ring Wear Test

3. Definitions

Definitions of main terms used in this standard shall be as follows.

3.1 Friction characteristics

Characteristics of frictional force occurring on the contact surface when trying to transmit power using the friction of the contact surface. The transmission torque performance of the belt CVT fluid represented by the coefficient of friction measured by a friction test using a block-on-ring test machine.

4. Test method

4.1 Summary of tests

Using a block-on-ring test machine and its related test equipment, a block shall be held in contact with the upper part of a ring within a test fluid of a specified temperature. A load shall be applied to the applied to the upper part of the block and the ring shall be rotated. The friction characteristics of the test fluid shall be evaluated using the frictional force in accordance with the ring rotational speed (sliding velocity) at the set load. The width of the wear scar on the block after the test has been completed shall also be measured.

4.2 Test machine

A block-on-ring test machine and its related test equipment, with a configuration shown in **Figures 1** and **2** and that meets the specifications listed in 4.2.1 to 4.2.8, shall be used.

4.2.1 Drive motor

The drive motor shall be useable up to the test rotational speed and shall possess the ability to output stable drive rotation even when bearing the test load.

4.2.2 Loading device

The specifications shall be capable of applying a load up to the test load amount. The machine shall be capable of stably applying the test condition load using an air cylinder, a heavy bob or similar.

4.2.3 Test tank

The test tank shall possess dimensions that enable the test to be conducted with the specified fluid quantity and shall have a configuration capable of controlling the temperature of the test fluid and of measuring the temperature of the test fluid within the test tank.

AVA Documents
Document Sharing Hub

Full document details: JSAE M358 2005

4.2.4 Panel heater

The panel heater shall be capable of keeping the test fluid within the test tank at the test fluid temperature.

4.2.5 Frictional force measuring device

This device shall be a machine that measures the frictional force occurring on the contact surface between the block and the ring using a load cell.

4.2.6 Thermocouple for measuring fluid temperature

The thermocouple shall be able to measure the temperature of the test fluid.

4.2.7 Block attachment part

The block and the ring shall have a structure so that the surfaces contact evenly; the block attachment part shall have a block holder part that connects to the frictional force measuring machine.

4.2.8 Ring attachment part

The ring attachment part shall have configuration in which the specified ring is reliably attached to the drive rotational axis.

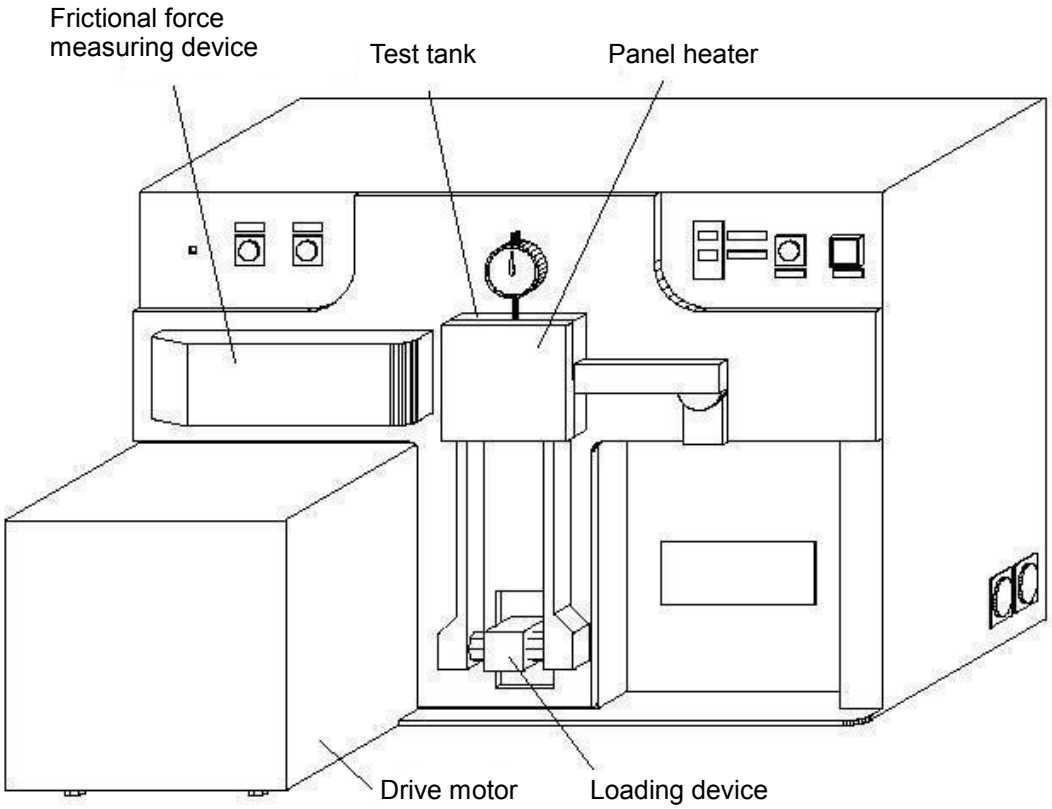

Figure 1 Block-on-ring test machine (example)

Documents
Document Sharing Hub
Full document details: JSAE M358 2005

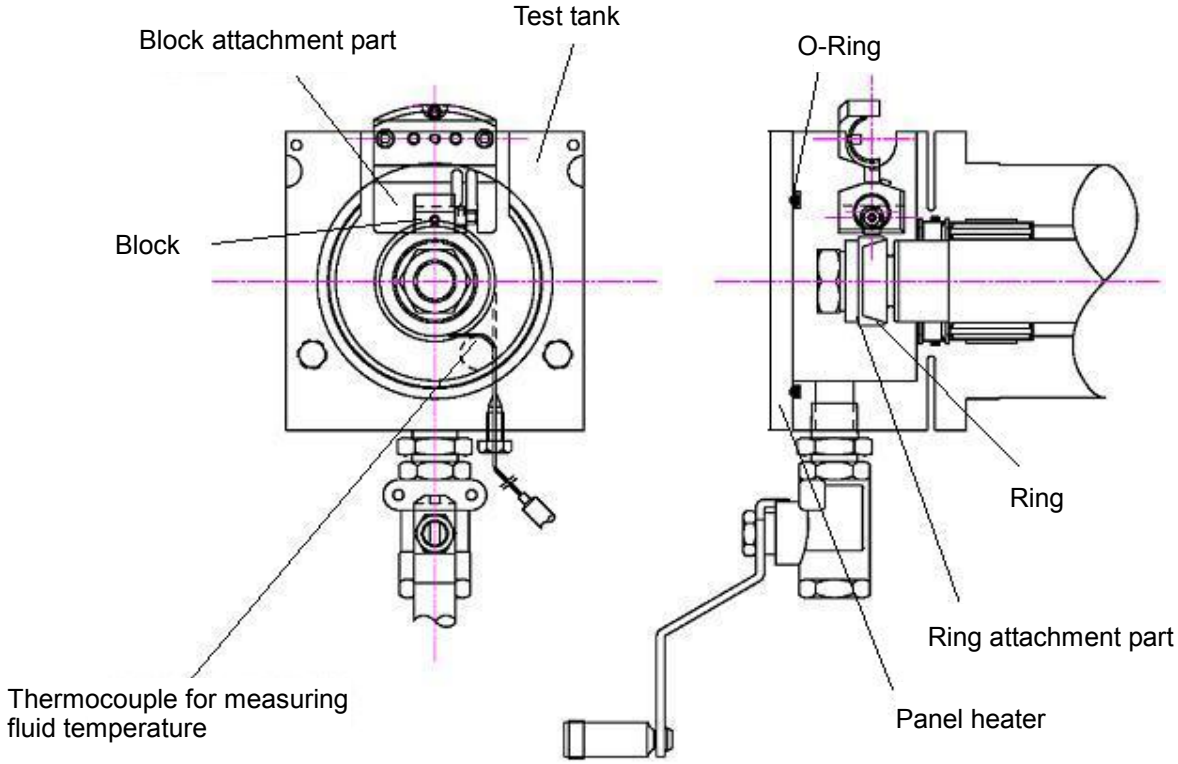

Figure 2 Test tank and block and ring attachment parts (example)

4.3 Block and ring

4.3.1 Block

The block shall be a standard shape as specified in **ASTM G77** and **ASTM D3704** and as shown in **Figure 3**. A block of SAE01 material, with a hardness of 58 to 63 HRC and a surface roughness of Rq 0.10 to 0.20 μm shall be used. The block shall have a block temperature measuring hole in its centre. This hole shall mark the attachment direction.

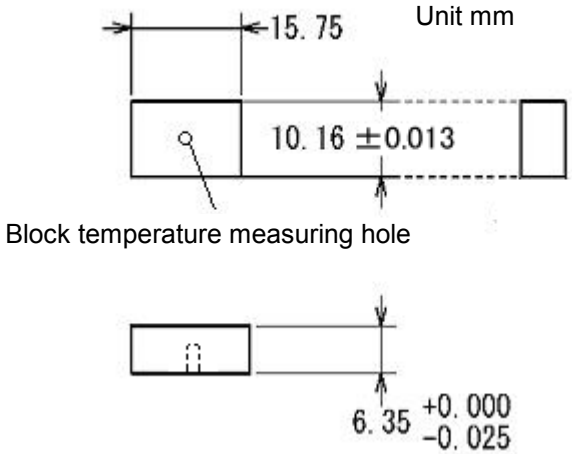

Figure 3 Block

Documents
Document Sharing Hub
Full document details: JSAE M358 2005

4.3.2 Ring

The ring shall be a standard shape as specified in **ASTM G77** and ASTM D3704 and as shown in **Figure 4**. A ring of SAE4620 material, with a hardness of 58 to 63 HRC and a surface roughness of Rq 0.15 to 0.30 μm shall be used.

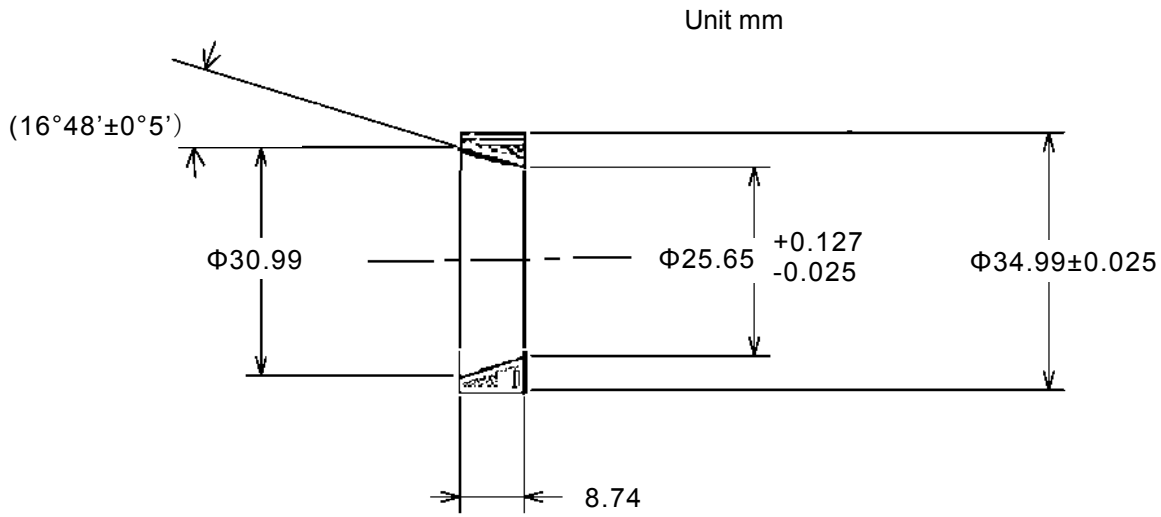

Figure 4 Ring

4.4 Test preparations

The test preparations shall be as follows.

4.4.1 Block and ring preparations

Wipe rust preventive oil or a similar fluid on the block and ring. Thoroughly wash the block and ring in an ultrasound bath using a non-chlorine based solvent (such as industrial gasoline or petroleum ether), and then let them dry.

4.4.2 Preparations for block and ring holding assembly and fluid tank

Wash the fluid tank, block holder, retainer nut and retainer washer that hold the ring in a non-chlorine based solvent (such as industrial gasoline or petroleum ether), and then let them dry.

4.4.3 Block and ring attachment

Using tweezers or similar, position the block centre hole (hole for inserting the thermocouple for measuring block temperature) face up, cover the block holder and fit the block into place. While supporting the block, position the thinner side of the ring in the back and attach the ring to the drive rotational axis, then screw on the retainer washer and retainer nut.

4.4.4 Panel heater attachment

After coating an O-ring in test fluid, place the O-ring in a location that has contact with the panel heater and fasten the panel heater to the fluid tank.

4.4.5 Test fluid filling

Fill with a quantity of test fluid that immerses the centre of a ring installed within the fluid tank.

4.4.6 Load cell warm-up

Turn the test machine on and let the load cell warm up for 30 min or more to enable stable measuring of frictional force.

Documents
Document Sharing Hub
Full document details: JSAE M358 2005

4.5 Test procedure

This test has a high load method and a low load method, and shall be conducted with different samples for each method. The time required for increasing or decreasing the load and the sliding velocity shall be within as short a time period as possible so sudden shocks and heating do not occur. Either test consists of the trial run and the friction characteristics measurement for the main test. When starting the test, start recording the fluid temperature, sliding velocity and frictional force wave pattern.

4.5.1 High load method

The test shall be conducted according to the test procedure shown in **Table 1** and the test operation pattern shown in **Figure 5**.

a) Trial run

First increase the fluid temperature by applying heat and then increase the sliding velocity to 0.5 m/s once the fluid temperature approaches 110 °C. When the fluid temperature reaches 110 °C, increase the load to 890 N and maintain this load for 5 min. Then increase the load to 1112 N and the sliding velocity to 1.0 m/s and maintain for 25 min. Verify that the frictional force wave pattern is stable and then with these same conditions move on to the main test.

b) Main test

Test for 5 min while maintaining a load of 1112 N, a fluid temperature of 110 °C and a sliding velocity of 1.0 m/s. Afterwards, decrease only the sliding velocity to 0.5 m/s and test for 5 min. After testing for 5 min at each sliding velocity of 0.25 m/s, 0.125 m/s, 0.075 m/s and 0.025 m/s, the main test is over.

c) Block wear scar width measurement

Once the main test is completed, remove the test piece. Wash it in solvent and when it is dry, measure the width of the wear scar on the block.

Table 1 Test procedure for high load method

Test	Load (N)	Fluid temperature (°C)	Sliding velocity (m/s)	Time (min)	Remarks
Trial run	0	Room temperature→	0		Begin increasing fluid temperature
		→110	0→0.5		Increase sliding velocity to 0.5 m/s, wait until fluid temperature reaches 110 °C
	0→890	110	0.5		Increase load to 890 N
	890			5	Maintain for 5 min
	890→1112				Increase load to 1112 N
	1112		0.5→1.0		Increase sliding velocity to 1.0 m/s
			1.0	25	Maintain for 25 min

Documents
Document Sharing Hub
Full document details: JSAE M358 2005

Table 1 Test procedure for high load method (Continued)

Test	Load (N)	Fluid temperature (°C)	Sliding velocity (m/s)	Time (min)	Remarks
Main test	1112	110	1.0	5	Measure frictional force for 30 sec before changing sliding velocity
			1.0→0.5		Decrease sliding velocity to 0.5 m/s
			0.5	5	Measure frictional force for 30 sec before changing sliding velocity
			0.5→0.25		Decrease sliding velocity to 0.25 m/s
			0.25	5	Measure frictional force for 30 sec before changing sliding velocity
			0.25→0.125		Decrease sliding velocity to 0.125 m/s
			0.125	5	Measure frictional force for 30 sec before changing sliding velocity
			0.125→0.075		Decrease sliding velocity to 0.075 m/s
			0.075	5	Measure frictional force for 30 sec before changing sliding velocity
			0.075→0.025		Decrease sliding velocity to 0.025 m/s
			0.025	5	Measure frictional force for 30 sec before ending main test

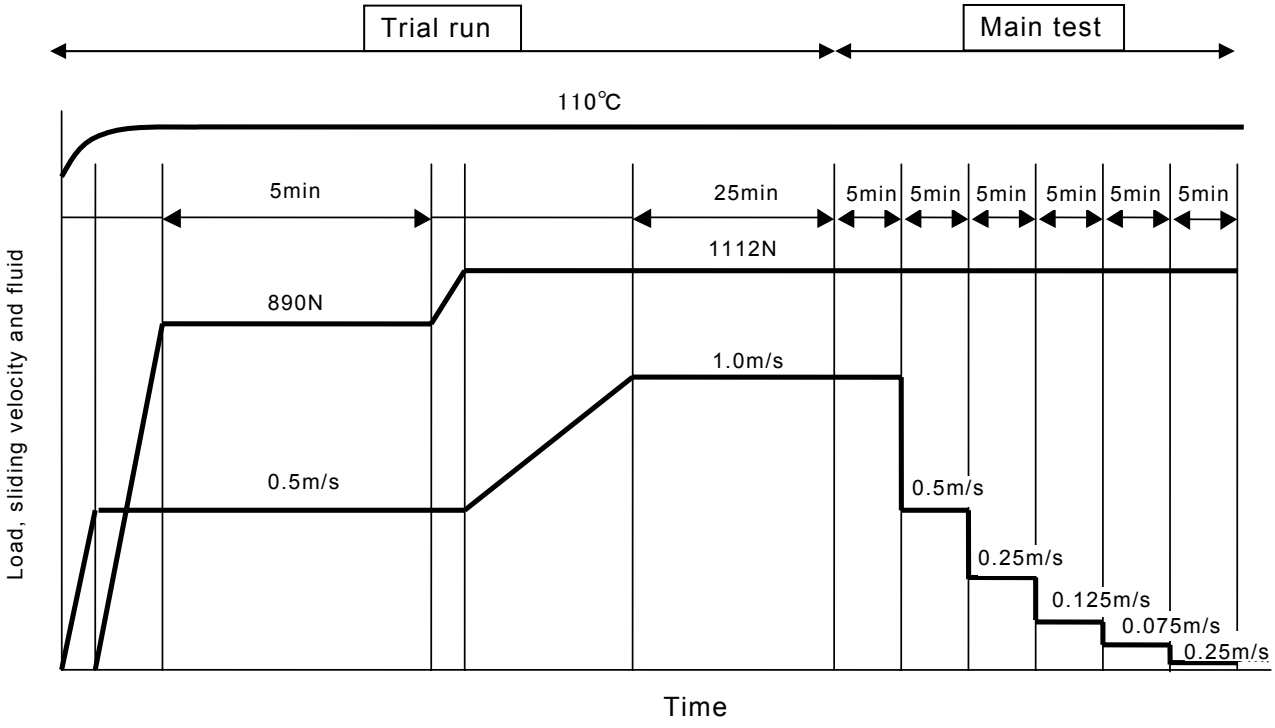

Figure 5 Operation pattern for high load method

Documents
Document Sharing Hub
Full document details: JSAE M358 2005