NFPA® 1142

Standard on Water Supplies for Suburban and Rural Fire Fighting

2012 Edition

NFPA, 1 Batterymarch Park, Quincy, MA 02169-7471
An International Codes and Standards Organization

Become a Member
Subscribe to the NATIONAL FIRE CODES SUBSCRIPTION SERVICE
Register for Seminars, Webinars, and Online Courses
Visit the NFPA Catalog
Documents
Document Sharing Hub
Full document details: NFPA 1142 2012

IMPORTANT NOTICES AND DISCLAIMERS CONCERNING NFPA® DOCUMENTS
NOTICE AND DISCLAIMER OF LIABILITY CONCERNING THE USE OF NFPA DOCUMENTS

NFPA® codes, standards, recommended practices, and guides ("NFPA Documents"), of which the document contained herein is one, are developed through a consensus standards development process approved by the American National Standards Institute. This process brings together volunteers representing varied viewpoints and interests to achieve consensus on fire and other safety issues. While the NFPA administers the process and establishes rules to promote fairness in the development of consensus, it does not independently test, evaluate, or verify the accuracy of any information or the soundness of any judgments contained in NFPA Documents.

The NFPA disclaims liability for any personal injury, property or other damages of any nature whatsoever, whether special, indirect, consequential or compensatory, directly or indirectly resulting from the publication, use of, or reliance on NFPA Documents. The NFPA also makes no guaranty or warranty as to the accuracy or completeness of any information published herein.

In issuing and making NFPA Documents available, the NFPA is not undertaking to render professional or other services for or on behalf of any person or entity. Nor is the NFPA undertaking to perform any duty owed by any person or entity to someone else. Anyone using this document should rely on his or her own independent judgment or, as appropriate, seek the advice of a competent professional in determining the exercise of reasonable care in any given circumstances.

The NFPA has no power, nor does it undertake, to police or enforce compliance with the contents of NFPA Documents. Nor does the NFPA list, certify, test, or inspect products, designs, or installations for compliance with this document. Any certification or other statement of compliance with the requirements of this document shall not be attributable to the NFPA and is solely the responsibility of the certifier or maker of the statement.

ISBN: 978-145590127-2 (Print)
ISBN: 978-145590165-4 (PDF)

12/09

AVA Documents
Document Sharing Hub

Full document details: NFPA 1142 2012

IMPORTANT NOTICES AND DISCLAIMERS CONCERNING NFPA DOCUMENTS

ADDITIONAL NOTICES AND DISCLAIMERS

Updating of NFPA Documents

Users of NFPA codes, standards, recommended practices, and guides ("NFPA Documents") should be aware that these documents may be superseded at any time by the issuance of new editions or may be amended from time to time through the issuance of Tentative Interim Amendments. An official NFPA Document at any point in time consists of the current edition of the document together with any Tentative Interim Amendments and any Errata then in effect. In order to determine whether a given document is the current edition and whether it has been amended through the issuance of Tentative Interim Amendments or corrected through the issuance of Errata, consult appropriate NFPA publications such as the National Fire Codes® Subscription Service, visit the NFPA website at www.nfpa.org, or contact the NFPA at the address listed below.

Interpretations of NFPA Documents

A statement, written or oral, that is not processed in accordance with Section 6 of the Regulations Governing Committee Projects shall not be considered the official position of NFPA or any of its Committees and shall not be considered to be, nor be relied upon as, a Formal Interpretation.

Patents

The NFPA does not take any position with respect to the validity of any patent rights referenced in, related to, or asserted in connection with an NFPA Document. The users of NFPA Documents bear the sole responsibility for determining the validity of any such patent rights, as well as the risk of infringement of such rights, and the NFPA disclaims liability for the infringement of any patent resulting from the use of or reliance on NFPA Documents.

NFPA adheres to the policy of the American National Standards Institute (ANSI) regarding the inclusion of patents in American National Standards ("the ANSI Patent Policy"), and hereby gives the following notice pursuant to that policy:

NOTICE: The user's attention is called to the possibility that compliance with an NFPA Document may require use of an invention covered by patent rights. NFPA takes no position as to the validity of any such patent rights or as to whether such patent rights constitute or include essential patent claims under the ANSI Patent Policy. If, in connection with the ANSI Patent Policy, a patent holder has filed a statement of willingness to grant licenses under these rights on reasonable and nondiscriminatory terms and conditions to applicants desiring to obtain such a license, copies of such filed statements can be obtained, on request, from NFPA. For further information, contact the NFPA at the address listed below.

Law and Regulations

Users of NFPA Documents should consult applicable federal, state, and local laws and regulations. NFPA does not, by the publication of its codes, standards, recommended practices, and guides, intend to urge action that is not in compliance with applicable laws, and these documents may not be construed as doing so.

Copyrights

NFPA Documents are copyrighted by the NFPA. They are made available for a wide variety of both public and private uses. These include both use, by reference, in laws and regulations, and use in private self-regulation, standardization, and the promotion of safe practices and methods. By making these documents available for use and adoption by public authorities and private users, the NFPA does not waive any rights in copyright to these documents.

Use of NFPA Documents for regulatory purposes should be accomplished through adoption by reference. The term "adoption by reference" means the citing of title, edition, and publishing information only. Any deletions, additions, and changes desired by the adopting authority should be noted separately in the adopting instrument. In order to assist NFPA in following the uses made of its documents, adopting authorities are requested to notify the NFPA (Attention: Secretary, Standards Council) in writing of such use. For technical assistance and questions concerning adoption of NFPA Documents, contact NFPA at the address below.

For Further Information

All questions or other communications relating to NFPA Documents and all requests for information on NFPA procedures governing its codes and standards development process, including information on the procedures for requesting Formal Interpretations, for proposing Tentative Interim Amendments, and for proposing revisions to NFPA documents during regular revision cycles, should be sent to NFPA headquarters, addressed to the attention of the Secretary, Standards Council, NFPA, 1 Batterymarch Park, P.O. Box 9101, Quincy, MA 02169-7471; email: stds_admin@nfpa.org

For more information about NFPA, visit the NFPA website at www.nfpa.org.

AVA Documents
Document Sharing Hub

Full document details: NFPA 1142 2012

Copyright © 2011 National Fire Protection Association®. All Rights Reserved.

NFPA® 1142

Standard on

Water Supplies for Suburban and Rural Fire Fighting

2012 Edition

This edition of NFPA 1142, *Standard on Water Supplies for Suburban and Rural Fire Fighting*, was prepared by the Technical Committee on Forest and Rural Fire Protection. It was issued by the Standards Council on May 31, 2011, with an effective date of June 20, 2011, and supersedes all previous editions.

This edition of NFPA 1142 was approved as an American National Standard on June 20, 2011.

Origin and Development of NFPA 1142

This document originally was issued in 1968 as a tentative document titled NFPA 25, *Recommended Practices for Water Supply Systems for Rural Fire Protection*. It was reissued in 1969 without the tentative status. In 1975, the document was changed to a standard and renumbered and retitled as NFPA 1231, *Standard on Water Supplies for Suburban and Rural Fire Fighting*.

The standard continued to be maintained and enhanced with 1984, 1989, and 1993 editions. The 1999 edition was renumbered as NFPA 1142, in keeping with the committee's plan to group all of its documents within a number range.

The 2001 edition incorporated much of the information about the design of dry hydrants, formerly found in the annexes, into the requirements to encourage improved design and performance.

The 2007 edition was completely revised to better organize the requirements in the standard and to better differentiate between alternate water supplies for fire fighting and municipal-type water systems. The material in Annex A on designing dry hydrant systems was reorganized and updated into a separate Annex I. The other annexes were reviewed and updated to reflect current practices.

In the 2012 edition of NFPA 1142, the technical committee made multiple updates to definitions in an effort to be consistent with the *NFPA Glossary of Terms*. Substantial changes in the 2012 edition include new material with guidance on bridge access to water sources, clarification of the working space surrounding dry hydrants, and additional annex material regarding water eductors and ejectors.

NFPA and National Fire Protection Association are registered trademarks of the National Fire Protection Association, Quincy, Massachusetts 02169.

Documents
Document Sharing Hub

Full document details: NFPA 1142 2012

Technical Committee on Forest and Rural Fire Protection

Randall K. Bradley, *Chair*
Moraga Orinda Fire District, CA [U]

James D. Bowman, American Wood Council, WA [M]
Matthew J. Brookman, Combustion Science & Engineering, Inc., MD [SE]
Martin P. Carrier, Carrier Business Advisory Services, Ltd., NH [U]
Rep. National Volunteer Fire Council
Donald A. Fischer, New York Division of Homeland Security & Emergency Services, NY [E]
Rep. International Fire Marshals Association
Donald C. Freyer, Warner Robins, GA [SE]
Charles W. George, IFSC Consultants, MT [SE]
Alison C. Gude, Tyco Fire Suppression & Building Products, WI [M]
Tory Henderson, USDA Forest Service, ID [E]
William Hendricks, Safer Building Solutions, CA [M]
Joseph T. Holland, Hoover Treated Wood Products, FL [M]
Cecilia W. Johnson, USDA Forest Service, MT [RT]
Gregory Kozey, Kochek Company, Inc., CT [M]
Gerry J. LaCavera, Florida Division of Forestry, FL [U]
Daniel J. Lang, California Fire Safe Council, CA [SE]
Alexander Maranghides, National Institute of Standards & Technology, MD [RT]
Kenneth J. Miller, II, San Diego County Fire Authority, CA [E]
Richard S. O'Brien, Goffstown Fire Department, NH [E]
Martin J. Pabich, Underwriters Laboratories Inc., IL [RT]
James C. Smalley, Scituate, MA [SE]
Herbert A. Spitzer, Jr., Spitzer's Fire & Environmental Consulting, OR [SE]
Edward F. Straw, Insurance Services Office, Inc., GA [I]
Larry Vandersall, Lawdon Fire Services, Inc., CA [SE]
Scott A. Wiggin, Town of Bedford Fire Department, NH [E]
James T. Wooters, Mizelle, Hodges & Associates Inc., GA [SE]

Alternates

Bill Bulman, Fairhope, AL [U]
(Alt. to M. P. Carrier)
William E. Mell, National Institute of Standards & Technology, MD [RT]
(Alt. to A. Maranghides)
Blake M. Shugarman, Underwriters Laboratories Inc., IL [RT]
(Alt. to M. J. Pabich)
Ralph E. Steinhoff, San Diego County Fire Authority, CA [E]
(Alt. to K. J. Miller, II)

Ryan Depew, NFPA Staff Liaison

This list represents the membership at the time the Committee was balloted on the final text of this edition. Since that time, changes in the membership may have occurred. A key to classifications is found at the back of the document.

NOTE: Membership on a committee shall not in and of itself constitute an endorsement of the Association or any document developed by the committee on which the member serves.

Committee Scope: This Committee shall have primary responsibility for documents on fire protection for rural, suburban, forest, grass, brush, and tundra areas. This Committee shall also have primary responsibility for documents on Class A foam and water enhancing gels, and their utilization for all wildland and structural fire fighting. This excludes fixed fire protection systems.

Documents
Document Sharing Hub
Full document details: NFPA 1142 2012

Contents

Chapter 1 Administration **1142–** 4
1.1 Scope **1142–** 4
1.2 Purpose **1142–** 4
1.3 Application **1142–** 4
1.4 Equivalency **1142–** 4

Chapter 2 Referenced Publications **1142–** 4
2.1 General **1142–** 4
2.2 NFPA Publications **1142–** 4
2.3 Other Publications **1142–** 4
2.4 References for Extracts in Mandatory Sections **1142–** 4

Chapter 3 Definitions **1142–** 5
3.1 General **1142–** 5
3.2 NFPA Official Definitions **1142–** 5
3.3 General Definitions **1142–** 5

Chapter 4 Calculating Minimum Water Supplies **1142–** 5
4.1 General **1142–** 5
4.2 Structures Without Exposure Hazards **1142–** 6
4.3 Structures with Exposure Hazards **1142–** 6
4.4 Structures with Automatic Sprinkler Protection **1142–** 6
4.5 Structures with Other Automatic Fire Suppression Systems **1142–** 6
4.6 Water Delivery Rate to the Fire Scene **1142–** 6
4.7 Other Uses **1142–** 6

Chapter 5 Classification of Occupancy Hazard **1142–** 7
5.1 General **1142–** 7
5.2 Occupancy Hazard Classification Number **1142–** 7

Chapter 6 Classification of Construction **1142–** 8
6.1 General **1142–** 8
6.2 Construction Classification Number **1142–** 8
6.3 Classification of Types of Building Construction **1142–** 8

Chapter 7 Water Supply **1142–**10
7.1 Approved Water Supply **1142–**10
7.2 Water Use Agreements **1142–**10
7.3 Identifying Water Sources **1142–**10
7.4 Fire Department Connections **1142–**10
7.5 Access to Water Sources **1142–**10
7.6 Mobile Water Supply Training **1142–**10
7.7 Records **1142–**10

Chapter 8 Dry Hydrants **1142–**10
8.1 General **1142–**10
8.2 Planning and Permits **1142–**10
8.3 Dry Hydrant Design and Location **1142–**10
8.4 Dry Hydrant Locations **1142–**11
8.5 Depth of Water Sources **1142–**11
8.6 Installation Procedure for Dry Hydrant System **1142–**11
8.7 Inspection and Maintenance of Dry Hydrants **1142–**11
8.8 Records for Dry Hydrants **1142–**11

Annex A Explanatory Material **1142–**11

Annex B Water Supply **1142–**21

Annex C Mobile Water Supply Apparatus **1142–**25

Annex D Large-Diameter Hose **1142–**34

Annex E Portable Pumps **1142–**37

Annex F Automatic Sprinkler Protection **1142–**40

Annex G Municipal-Type Water System **1142–**40

Annex H Calculating Minimum Water Supplies **1142–**48

Annex I Dry Hydrant Design **1142–**53

Annex J Informational References **1142–**61

Index **1142–**62

AVA Documents Document Sharing Hub
Full document details: NFPA 1142 2012

NFPA 1142

Standard on

Water Supplies for Suburban and Rural Fire Fighting

2012 Edition

IMPORTANT NOTE: This NFPA document is made available for use subject to important notices and legal disclaimers. These notices and disclaimers appear in all publications containing this document and may be found under the heading "Important Notices and Disclaimers Concerning NFPA Documents." They can also be obtained on request from NFPA or viewed at www.nfpa.org/disclaimers.

NOTICE: An asterisk (*) following the number or letter designating a paragraph indicates that explanatory material on the paragraph can be found in Annex A.

Changes other than editorial are indicated by a vertical rule beside the paragraph, table, or figure in which the change occurred. These rules are included as an aid to the user in identifying changes from the previous edition. Where one or more complete paragraphs have been deleted, the deletion is indicated by a bullet (•) between the paragraphs that remain.

A reference in brackets [ ] following a section or paragraph indicates material that has been extracted from another NFPA document. As an aid to the user, the complete title and edition of the source documents for extracts in mandatory sections of the document are given in Chapter 2 and those for extracts in informational sections are given in Annex J. Extracted text may be edited for consistency and style and may include the revision of internal paragraph references and other references as appropriate. Requests for interpretations or revisions of extracted text shall be sent to the technical committee responsible for the source document.

Information on referenced publications can be found in Chapter 2 and Annex J.

Chapter 1 Administration

1.1 Scope.

1.1.1 This standard identifies a method of determining the minimum requirements for alternative water supplies for structural fire-fighting purposes in areas where the authority having jurisdiction (AHJ) determines that adequate and reliable water supply systems for fire-fighting purposes do not otherwise exist.

1.1.2 An adequate and reliable municipal-type water supply is one that is sufficient every day of the year to control and extinguish anticipated fires in the municipality, particular building, or building group served by the water supply.

1.2* Purpose. The purpose of this standard is to assist the AHJ to establish the minimum water supply necessary for structural fire-fighting purposes in those areas where it has been determined that there is no water or inadequate water for fire fighting.

1.3 Application.

1.3.1 This standard does not address fireground operational procedures dealing with the rate or method of water application.

1.3.2* This standard does not apply to the calculation of an adequate amount of water for large, special fire protection problems, such as bulk flammable liquid storage, bulk flammable gas storage, large varnish and paint factories, some plastics manufacturing and storage, aircraft hangars, distilleries, refineries, lumberyards, grain elevators, large chemical plants, coal mines, tunnels, subterranean structures, and warehouses using high rack storage for flammables or pressurized aerosols.

1.3.3 This standard does not exclude the use of this water for other fire-fighting or emergency activities.

1.4 Equivalency. Nothing in this standard is intended to prevent the use of systems, methods, or devices of equivalent or superior quality, strength, fire resistance, effectiveness, durability, and safety in place of those prescribed by this standard, provided technical documentation is submitted to the AHJ to demonstrate equivalency and the system, method, or device is approved for the intended purpose.

Chapter 2 Referenced Publications

2.1 General. The documents or portions thereof listed in this chapter are referenced within this standard and shall be considered part of the requirements of this document.

2.2 NFPA Publications. National Fire Protection Association, 1 Batterymarch Park, Quincy, MA 02169-7471.

NFPA 13, *Standard for the Installation of Sprinkler Systems,* 2010 edition.

NFPA 13D, *Standard for the Installation of Sprinkler Systems in One- and Two-Family Dwellings and Manufactured Homes,* 2010 edition.

NFPA 13R, *Standard for the Installation of Sprinkler Systems in Residential Occupancies up to and Including Four Stories in Height,* 2010 edition.

NFPA 220, *Standard on Types of Building Construction,* 2012 edition.

NFPA 285, *Standard Fire Test Method for Evaluation of Fire Propagation Characteristics of Exterior Non-Load-Bearing Wall Assemblies Containing Combustible Components,* 2006 edition.

NFPA 1963, *Standard for Fire Hose Connections,* 2009 edition.

2.3 Other Publications. *Merriam-Webster's Collegiate Dictionary,* 11th edition, Merriam-Webster, Inc., Springfield, MA, 2003.

2.4 References for Extracts in Mandatory Sections.

NFPA 1, *Fire Code,* 2012 edition.

NFPA 13D, *Standard for the Installation of Sprinkler Systems in One- and Two-Family Dwellings and Manufactured Homes,* 2010 edition.

NFPA *101®*, *Life Safety Code®,* 2012 edition.

NFPA 1141, *Standard for Fire Protection Infrastructure for Land Development in Wildland, Rural, and Suburban Areas,* 2012 edition.

NFPA 1600®, *Standard on Disaster/Emergency Management and Business Continuity Programs,* 2010 edition.

NFPA 1901, *Standard for Automotive Fire Apparatus,* 2009 edition.

NFPA 1911, *Standard for the Inspection, Maintenance, Testing, and Retirement of In-Service Automotive Fire Apparatus,* 2007 edition.

NFPA 1925, *Standard on Marine Fire-Fighting Vessels,* 2008 edition.

NFPA 1961, *Standard on Fire Hose,* 2007 edition.

NFPA 5000®, *Building Construction and Safety Code®,* 2012 edition.

Documents
Document Sharing Hub
Full document details: NFPA 1142 2012

Chapter 3 Definitions

3.1 General. The definitions contained in this chapter shall apply to the terms used in this standard. Where terms are not defined in this chapter or within another chapter, they shall be defined using their ordinarily accepted meanings within the context in which they are used. *Merriam-Webster's Collegiate Dictionary*, 11th edition, shall be the source for the ordinarily accepted meaning.

3.2 NFPA Official Definitions.

3.2.1* Approved. Acceptable to the authority having jurisdiction.

3.2.2* Authority Having Jurisdiction (AHJ). An organization, office, or individual responsible for enforcing the requirements of a code or standard, or for approving equipment, materials, an installation, or a procedure.

3.2.3 Shall. Indicates a mandatory requirement.

3.2.4 Should. Indicates a recommendation or that which is advised but not required.

3.2.5 Standard. A document, the main text of which contains only mandatory provisions using the word "shall" to indicate requirements and which is in a form generally suitable for mandatory reference by another standard or code or for adoption into law. Nonmandatory provisions shall be located in an appendix or annex, footnote, or fine-print note and are not to be considered a part of the requirements of a standard.

3.3 General Definitions.

3.3.1 Alternative Water Supply. Water supplies provided to meet the minimum fire flow/duration requirements where no municipal-type water system exists or to supplement an inadequate municipal-type water supply.

3.3.2 Automatic Aid. A plan developed between two or more fire departments for immediate joint response on first alarms.

3.3.3 Building. Any structure used or intended for supporting or sheltering any use or occupancy. [***101,*** 2012]

3.3.4 Construction Classification Number. A series of numbers from 0.5 through 1.5 that are mathematical factors used in a formula to determine the total water supply requirements.

3.3.5 Dry Hydrant. An arrangement of pipe permanently connected to a water source other than a piped, pressurized water supply system that provides a ready means of water supply for fire-fighting purposes and that utilizes the drafting (suction) capability of a fire department pump.

3.3.6 Dwelling. Any detached building, or any part of a townhouse structure that is separated from the remainder of the townhouse structure with fire resistance rated assemblies in accordance with local building code, that contains no more than two dwelling units intended to be used, rented, leased, let, or hired out to be occupied or that are occupied for habitation purposes. [**13D,** 2010]

3.3.7 Dwelling Unit. One or more rooms arranged for complete, independent housekeeping purposes, with space for eating, living, and sleeping; facilities for cooking; and provisions for sanitation. [**5000**, 2012]

3.3.8 Eductor. A device that uses the Venturi principle to siphon a liquid in a water stream. [**1925**, 2008]

3.3.9 Ejector. A siphon device used to fill an engine's tank when the water source is below or beyond the engine's drafting capability.

3.3.10* Exposure Hazard. A structure within 50 ft (15.24 m) of another building and 100 ft^2 (9.3 m^2) or larger in area.

3.3.11* Fire Department. An organization providing fire suppression, rescue, and related activities.

3.3.12* Large Diameter Hose. A hose of 3½ in. (90 mm) or larger size. [**1961,** 2007]

3.3.13 Lift. The vertical height that water must be raised during a drafting operation, measured from the surface of a static source of water to the centerline of the pump intake. [**1911,** 2007]

3.3.14 Minimum Water Supply. The quantity of water required for fire control and extinguishment.

3.3.15 Mobile Water Supply Apparatus (Tanker, Tender). A vehicle designed primarily for transporting (pickup, transporting, and delivering) water to fire emergency scenes to be applied by other vehicles or pumping equipment. [**1901**, 2010]

3.3.16 Municipal-Type Water System. A system having water pipes servicing fire hydrants and designed to furnish, over and above domestic consumption, a minimum of 250 gpm (950 L/min) at 20 psi (138 kPa) residual pressure for a 2-hour duration. [**1141,** 2012]

3.3.17* Mutual Aid/Assistance Agreement. A prearranged agreement between two or more entities to share resources in response to an incident. [**1600,** 2010]

3.3.18 Occupancy Hazard Classification Number. A series of numbers from 3 through 7 that are mathematical factors used in a formula to determine total water supply requirements.

3.3.19 Reducer. A fitting used to connect a small hose line or pipe to a larger hose line or pipe.

3.3.20 Rural. Those areas that are not unsettled wilderness or uninhabitable territory but are sparsely populated with densities below 500 persons per square mile.

3.3.21 Structure. That which is built or constructed; an edifice or building of any kind, or any piece of work artificially built up or composed of parts joined together in some definite manner.

3.3.22* Suburb or Suburban. Those moderately inhabited areas with population densities of at least 500 persons per square mile but less than 1000 persons per square mile.

3.3.23 Water Delivery Rate. The minimum amount of water per minute (in gpm or L/min), required by this standard or the AHJ, to be delivered to the fire scene via mobile water supply apparatus, hose lines, or a combination of both.

3.3.24* Water Supply Officer (WSO). The fire department officer or designee responsible for providing water for fire-fighting purposes.

Chapter 4 Calculating Minimum Water Supplies

4.1 General.

4.1.1 Prior to calculating the minimum water supply for a structure, the structure shall be surveyed to obtain the following information:

(1) Occupancy hazard
(2) Type of construction
(3) Structure dimensions (length, width, and height)
(4) Exposures, if any

AVA Documents Document Sharing Hub
Full document details: NFPA 1142 2012

4.1.1.1 For new construction, plans shall be submitted to the fire department or the AHJ for determination of the minimum water supply required before construction is started.

4.1.1.2 Changes made in the structural design, dimensions, occupancy, or contents of a planned or existing structure that affect the occupancy hazard or the construction type shall require that the structure be resurveyed to determine if changes are necessary in the minimum water supply required.

4.1.1.3 If there are changes in automatic fire suppression systems in a structure that would affect the protection afforded, the property owner(s) shall notify the AHJ in writing of such changes, including temporary impairment.

4.1.2* The methodology in this chapter shall be used to calculate the required minimum water supply necessary for structural fire-fighting purposes.

4.1.3* The minimum requirements shall be subject to increase by the AHJ to compensate for particular conditions such as the following:

(1) Limited fire department resources
(2) Extended fire department response time or distance
(3) Potential for delayed discovery of the fire
(4) Limited access
(5) Hazardous vegetation
(6) Structural attachments, such as decks and porches
(7) Unusual terrain
(8) Special uses and unusual occupancies

4.1.4 The AHJ shall be permitted to specify how the water supplies required in this document are provided, giving consideration to local conditions and need.

4.1.5 For the purpose of calculating minimum water supply requirement, a structure shall be considered an exposure hazard under the following conditions:

(1) It is 100 ft^2 (9.3 m^2) or larger in area and is within 50 ft (15.24 m) of another structure.
(2) The structure, regardless of size, is of occupancy hazard classification 3 or 4 as determined in Chapter 5 and is within 50 ft (15.24 m) of another structure.

4.2 Structures Without Exposure Hazards.

4.2.1* For structures with no exposure hazards, the minimum water supply, in gallons (liters), shall be determined by calculating the total enclosed volume, in cubic feet (cubic meters), of the structure, including any attached structures, dividing by the occupancy hazard classification number as determined from Chapter 5, and multiplying by the construction classification number as determined from Chapter 6 as follows:

$$WS_{min} = \frac{VS_{tot}}{OHC}(CC)$$

where:
WS_{min} = minimum water supply in gal (For results in L, multiply by 3.785.)
VS_{tot} = total volume of structure in ft^3 (If volume is measured in m^3, multiply by 35.3.)
OHC = occupancy hazard classification number
CC = construction classification number

4.2.2 The minimum water supply required for any structure without exposure hazards shall not be less than 2000 gal (7600 L).

4.3 Structures with Exposure Hazards.

4.3.1* For structures with unattached structural exposure hazards, the minimum water supply, in gallons (liters), shall be determined by calculating the total enclosed volume, in cubic feet (cubic meters), of the structure, dividing by the occupancy hazard classification number as determined from Chapter 5, multiplying by the construction classification number as determined from Chapter 6, and multiplying by 1.5 as follows:

$$WS_{min} = \frac{VS_{tot}}{OHC}(CC)\times 1.5$$

where:
WS_{min} = minimum water supply in gal (For results in L, multiply by 3.785.)
VS_{tot} = total volume of structure in ft^3 (If volume is measured in m^3, multiply by 35.3.)
OHC = occupancy hazard classification number
CC = construction classification number

4.3.2 The minimum water supply required for a structure with exposure hazards shall not be less than 3000 gal (11,355 L).

4.4* Structures with Automatic Sprinkler Protection.

4.4.1 The AHJ shall be permitted to reduce the water supply required by this standard for manual fire-fighting purposes when a structure is protected by an automatic sprinkler system that fully meets the requirements of NFPA 13, *Standard for the Installation of Sprinkler Systems*; NFPA 13D, *Standard for the Installation of Sprinkler Systems in One- and Two-Family Dwellings and Manufactured Homes*; or NFPA 13R, *Standard for the Installation of Sprinkler Systems in Residential Occupancies up to and Including Four Stories in Height. (See Annex F.)*

4.4.2 If a sprinkler system protecting a building does not fully meet the requirements of NFPA 13, NFPA 13D, or NFPA 13R, a water supply shall be provided in accordance with this standard.

4.5 Structures with Other Automatic Fire Suppression Systems. For any structure fully or partially protected by an automatic fire suppression system other than as specified in Section 4.4, the AHJ shall determine the minimum water supply required for fire-fighting purposes.

4.6 Water Delivery Rate to the Fire Scene.

4.6.1 The fire department shall develop the capability to deliver the amount of water determined in accordance with Sections 4.2 through 4.5 to the incident scene at the rate shown in Table 4.6.1.

4.6.2 The water shall be available on a continuous basis at the rate shown in Table 4.6.1 within 5 minutes of the arrival of the first apparatus at the incident.

4.7 Other Uses. Water supplies developed to meet this standard shall be permitted to be used for fighting fires in other than structures or for use during other emergency activities.

Table 4.6.1 Minimum Capability of Fire Department to Deliver Water

Total Water Supply Required		Rate Water Is Available at the Incident	
gal	L	gpm	L/min
<2,500	9,459	250	950
2,500–9,999	9,460–37,849	500	1,900
10,000–19,999	37,850–75,699	750	2,850
≥20,000	≥75,700	1,000	3,800

Documents
Document Sharing Hub
Full document details: NFPA 1142 2012

Chapter 5 Classification of Occupancy Hazard

5.1 General.

5.1.1 This chapter shall be used to determine the occupancy hazard classification number used in the calculation of water supply requirements in Chapter 4.

5.1.2 Where more than one occupancy is present in a structure, the occupancy hazard classification number for each occupancy shall be determined separately, and the classification number for the most hazardous occupancy shall be used for the entire structure.

5.2* Occupancy Hazard Classification Number.

5.2.1 Occupancy Hazard Classification Number 3.

5.2.1.1* Occupancy hazard classification number 3 shall be used for severe hazard occupancies.

5.2.1.2 Occupancies having conditions similar to the following shall be assigned occupancy hazard classification number 3:

(1) Cereal or flour mills
(2) Combustible hydraulics
(3) Cotton picking and opening operations
(4) Die casting
(5) Explosives and pyrotechnics manufacturing and storage
(6) Feed and gristmills
(7) Flammable liquid spraying
(8) Flow coating/dipping
(9) Linseed oil mills
(10) Manufactured homes/modular building assembly
(11) Metal extruding
(12) Plastic processing
(13) Plywood and particleboard manufacturing
(14) Printing using flammable inks
(15) Rubber reclaiming
(16) Sawmills
(17) Solvent extracting
(18) Straw or hay in bales
(19) Textile picking
(20) Upholstering with plastic foams

5.2.2 Occupancy Hazard Classification Number 4.

5.2.2.1* Occupancy hazard classification number 4 shall be used for high hazard occupancies.

5.2.2.2 Occupancies having conditions similar to the following shall be assigned occupancy hazard classification number 4:

(1) Barns and stables (commercial)
(2) Building materials supply storage
(3) Department stores
(4) Exhibition halls, auditoriums, and theaters
(5) Feed stores (without processing)
(6) Freight terminals
(7) Mercantiles
(8) Paper and pulp mills
(9) Paper processing plants
(10) Piers and wharves
(11) Repair garages
(12) Rubber products manufacturing and storage
(13) Warehouses, such as those used for furniture, general storage, paint, paper, and woodworking industries

5.2.3 Occupancy Hazard Classification Number 5.

5.2.3.1 Occupancy hazard classification number 5 shall be used for moderate hazard occupancies, in which the quantity or combustibility of contents is expected to develop moderate rates of spread and heat release. The storage of combustibles shall not exceed 12 ft (3.66 m) in height.

5.2.3.2 Occupancies having conditions similar to the following shall be assigned occupancy hazard classification number 5:

(1) Amusement occupancies
(2) Clothing manufacturing plants
(3) Cold storage warehouses
(4) Confectionery product warehouses
(5) Farm storage buildings, such as corn cribs, dairy barns, equipment sheds, and hatcheries
(6) Laundries
(7) Leather goods manufacturing plants
(8) Libraries (with large stockroom areas)
(9) Lithography shops
(10) Machine shops
(11) Metalworking shops
(12) Nurseries (plant)
(13) Pharmaceutical manufacturing plants
(14) Printing and publishing plants
(15) Restaurants
(16) Rope and twine manufacturing plants
(17) Sugar refineries
(18) Tanneries
(19) Textile manufacturing plants
(20) Tobacco barns
(21) Unoccupied buildings

5.2.4 Occupancy Hazard Classification Number 6.

5.2.4.1 Occupancy hazard classification number 6 shall be used for low hazard occupancies, in which the quantity or combustibility of contents is expected to develop relatively low rates of spread and heat release.

5.2.4.2 Occupancies having conditions similar to the following shall be assigned occupancy hazard classification number 6:

(1) Armories
(2) Automobile parking garages
(3) Bakeries
(4) Barber or beauty shops
(5) Beverage manufacturing plants/breweries
(6) Boiler houses
(7) Brick, tile, and clay product manufacturing plants
(8) Canneries
(9) Cement plants
(10) Churches and similar religious structures
(11) Dairy products manufacturing and processing plants
(12) Doctors' offices
(13) Electronics plants
(14) Foundries
(15) Fur processing plants
(16) Gasoline service stations
(17) Glass and glass products manufacturing plants
(18) Horse stables
(19) Mortuaries
(20) Municipal buildings
(21) Post offices
(22) Slaughterhouses
(23) Telephone exchanges
(24) Tobacco manufacturing plants
(25) Watch and jewelry manufacturing plants
(26) Wineries

AVA Documents Document Sharing Hub
Full document details: NFPA 1142 2012

5.2.5 Occupancy Hazard Classification Number 7.

5.2.5.1 Occupancy hazard classification number 7 shall be used for light hazard occupancies, in which the quantity or combustibility of contents is expected to develop relatively light rates of spread and heat release.

5.2.5.2 Occupancies having conditions similar to the following shall be assigned occupancy hazard classification number 7:

(1) Apartments
(2) Colleges and universities
(3) Clubs
(4) Dormitories
(5) Dwellings
(6) Fire stations
(7) Fraternity or sorority houses
(8) Hospitals
(9) Hotels and motels
(10) Libraries (except large stockroom areas)
(11) Museums
(12) Nursing and convalescent homes
(13) Offices (including data processing)
(14) Police stations
(15) Prisons
(16) Schools
(17) Theaters without stages

Chapter 6 Classification of Construction

6.1 General.

6.1.1 This chapter shall be used to determine the construction classification number used in the calculation of water supply requirements in Chapter 4.

6.1.2 Where more than one type of construction is present in a structure, the classification number for each type of construction shall be determined separately, and the higher construction classification number shall be used for the entire structure.

6.2* Construction Classification Number.

6.2.1 The construction classification number shall be as shown in Table 6.2.1 based on the construction of the structure as determined in accordance with Section 6.3.

Table 6.2.1 Construction Classification Number

Construction Type	Classification Number
Type I (442 or 332)	0.5
Type II (222, 111, or 000)	0.75
Type III (211 or 200)	1.0
Type IV (2HH)	0.75
Type V (111 or 000)	1.5

6.2.2 For dwellings, the maximum construction classification number shall be 1.0.

6.3 Classification of Types of Building Construction.

6.3.1* Classification of types of building construction shall be in accordance with 6.3.3 through 6.3.7 and Table 6.3.1.

6.3.2 If the type of construction of the structure has been determined using NFPA 220, *Standard on Types of Building Construction*, that type of construction shall be permitted to be used in lieu of determining the type of construction in accordance with 6.3.3 through 6.3.7.

6.3.3 Type I (442 or 332) Construction.

6.3.3.1 Type I (442 or 332) construction shall be those types in which the fire walls, structural elements, walls, arches, floors, and roofs are of approved noncombustible or limited-combustible materials.

6.3.3.2 Structural members shall have fire resistance ratings not less than those specified in Table 6.3.1.

6.3.4 Type II (222, 111, or 000) Construction.

6.3.4.1 Type II (222, 111, or 000) construction shall be those types not qualifying as Type I construction in which the fire walls, structural elements, walls, arches, floors, and roofs are of approved noncombustible or limited-combustible materials.

6.3.4.2 Structural members shall have fire resistance ratings not less than those specified in Table 6.3.1.

6.3.5 Type III (211 or 200) Construction.

6.3.5.1 Type III (211 or 200) construction shall be that type in which exterior walls and structural members that are portions of exterior walls are of approved noncombustible or limited-combustible materials.

6.3.5.2 Fire walls, interior structural elements, walls, arches, floors, and roofs shall be permitted to be entirely or partially constructed of wood of smaller dimensions than required for Type IV construction or of approved noncombustible, limited-combustible, or other approved combustible materials.

6.3.5.3 In addition, structural members shall have fire resistance ratings not less than those specified in Table 6.3.1.

6.3.6 Type IV (2HH) Construction.

6.3.6.1 Type IV (2HH) construction shall be that type in which fire walls, exterior walls, and interior bearing walls and structural elements that are portions of such walls are of approved noncombustible or limited-combustible materials.

6.3.6.1.1 Other interior structural elements, arches, floors, and roofs shall be of solid or laminated wood without concealed spaces and shall comply with the allowable dimensions of 6.3.6.5 through 6.3.6.10.

6.3.6.1.2 In addition, structural members shall have fire resistance ratings not less than those specified in Table 6.3.1.

6.3.6.2 Interior columns, arches, beams, girders, and trusses of approved materials other than wood shall be permitted, provided they are protected to provide a fire resistance rating of not less than 1 hour.

6.3.6.3 Certain concealed spaces shall be permitted in accordance with 6.3.6.7.4.

6.3.6.4 All dimensions in 6.3.6.5 through 6.3.6.10 shall be considered nominal.

6.3.6.5 Columns.

6.3.6.5.1 Wood columns supporting floor loads shall be not less than 8 in. (200 mm) in any dimension.

6.3.6.5.2 Wood columns supporting only roof loads shall be not less than 6 in. (150 mm) in width and not less than 8 in. (200 mm) in depth.

Documents
Document Sharing Hub
Full document details: NFPA 1142 2012

Table 6.3.1 Fire Resistance Ratings for Type I through Type V Construction (hr)

	Type I		Type II			Type III		Type IV	Type V	
	442	**332**	**222**	**111**	**000**	**211**	**200**	**2HH**	**111**	**000**
Exterior Bearing Walls										
Supporting more than one floor, columns, or other bearing walls	4	3	2	1	0	2	2	2	1	0
Supporting one floor only	4	3	2	1	0	2	2	2	1	0
Supporting a roof only	4	3	1	1	0	2	2	2	1	0
Interior Bearing Walls										
Supporting more than one floor, columns, or other bearing walls	4	3	2	1	0	1	0	2	1	0
Supporting one floor only	3	2	2	1	0	1	0	1	1	0
Supporting roofs only	3	2	1	1	0	1	0	1	1	0
Columns										
Supporting more than one floor, columns, or other bearing walls	4	3	2	1	0	1	0	H*	1	0
Supporting one floor only	3	2	2	1	0	1	0	H*	1	0
Supporting roofs only	3	2	1	1	0	1	0	H*	1	0
Beams, Girders, Trusses, and Arches										
Supporting more than one floor, columns, or other bearing walls	4	3	2	1	0	1	0	H*	1	0
Supporting one floor only	2	2	2	1	0	1	0	H*	1	0
Supporting roofs only	2	2	1	1	0	1	0	H*	1	0
Floor Construction	2	2	2	1	0	1	0	H*	1	0
Roof Construction	2	1½	1	1	0	1	0	H*	1	0
Interior Nonbearing Walls	0	0	0	0	0	0	0	0	0	0
Exterior Nonbearing Walls†	0	0	0	0	0	0	0	0	0	0

Note: Shaded columns indicate those members that are permitted to be of approved combustible material.
*"H" indicates heavy timber members; see 6.3.6 for requirements.
†Exterior nonbearing walls meeting the conditions of acceptance of NFPA 285, *Standard Fire Test Method for Evaluation of Fire Propagation Characteristics of Exterior Non-Load-Bearing Wall Assemblies Containing Combustible Components*, are permitted to be used.

6.3.6.6 Beams.

6.3.6.6.1 Wood beams and girders supporting floor loads shall be not less than 6 in. (150 mm) in width and not less than 10 in. (250 mm) in depth.

6.3.6.6.2 Wood beams and girders and other roof framing supporting only roof loads shall be not less than 4 in. (100 mm) in width and not less than 6 in. (150 mm) in depth.

6.3.6.7 Arches.

6.3.6.7.1 Framed or glued laminated arches that spring from grade or the floor line and timber trusses that support floor loads shall be not less than 8 in. (200 mm) in width or depth.

6.3.6.7.2 Framed or glued laminated arches for roof construction that spring from grade or the floor line and do not support floor loads shall have members not less than 6 in. (150 mm) in width and not less than 8 in. (200 mm) in depth for the lower half of the member height, and not less than 6 in. (150 mm) in depth for the upper half of the member height.

6.3.6.7.3 Framed or glued laminated arches for roof construction that spring from the top of walls or wall abutments, and timber trusses that do not support floor loads, shall have members not less than 4 in. (100 mm) in width and not less than 6 in. (150 mm) in depth.

6.3.6.7.4 Spaced members shall be permitted to be composed of two or more pieces not less than 3 in. (75 mm) in thickness where blocked solidly throughout their intervening spaces or where such spaces are tightly closed by a continuous wood cover plate not less than 2 in. (50 mm) in thickness that is secured to the underside of the members.

6.3.6.8 Splice Plates. Splice plates shall be not less than 3 in. (75 mm) in thickness.

6.3.6.9 Floors. Floors shall be constructed of spline or tongue-and-groove plank not less than 3 in. (75 mm) in thickness that is covered with 1 in. (25 mm) tongue-and-groove flooring, laid crosswise or diagonally to the plank, or with ½ in. (12.5 mm) wood structural panel; or they shall be constructed of laminated

AVA Documents Document Sharing Hub
Full document details: NFPA 1142 2012

planks not less than 4 in. (100 mm) in width, set close together on edge, spiked at intervals of 18 in. (460 mm), and covered with 1 in. (25 mm) tongue-and-groove flooring, laid crosswise or diagonally to the plank, or with ½ in. (12.5 mm) wood structural panel.

6.3.6.10 Roof Decks. Roof decks shall be constructed of spline or tongue-and-groove plank not less than 2 in. (50 mm) in thickness; or of laminated planks not less than 3 in. (75 mm) in width, set close together on edge, and laid as required for floors; or of 1⅛ in. (28.5 mm) thick interior wood structural panel (exterior glue); or of approved noncombustible or limited-combustible materials of equivalent fire durability.

6.3.7 Type V (111 or 000) Construction. Type V (111 or 000) construction shall be that type in which exterior walls, bearing walls, columns, beams, girders, trusses, arches, floors, and roofs are entirely or partially of wood or other approved combustible material smaller than material required for Type IV construction. In addition, structural members shall have fire resistance ratings not less than those specified in Table 6.3.1.

Chapter 7 Water Supply

7.1 Approved Water Supply.

7.1.1* Any water supply source used to meet the requirements of this standard shall be of a quality approved by the AHJ.

7.1.2 The water supply source shall be maintained and accessible on a year-round basis.

7.1.3 In locations where adequate municipal-type water systems are not provided and additional fire protection is needed, minimum water supplies shall be established in, or transportable to, the designated area.

7.1.4 Unless otherwise permitted by the AHJ, all approved nonpressurized water supply sources shall be accessible using dry hydrants that meet the requirements of this standard.

7.1.5* To be acceptable, water supply sources shall maintain the minimum capacity and delivery requirements on a year-round basis, based on the 50-year drought for the water source.

7.2* Water Use Agreements. The AHJ shall enter into a water use agreement when a private water supply source is to be used to meet the requirements of this standard.

7.3 Identifying Water Sources. A water source indicator approved by the AHJ shall be erected at each water point identifying the site for fire department emergency use.

7.4 Fire Department Connections. Any fitting provided at a water source to permit a fire apparatus to connect to the water source shall be approved by the AHJ and shall conform to NFPA 1963, *Standard for Fire Hose Connections*.

7.5* Access to Water Sources. Roads providing a means of access to any required water supply shall be constructed and maintained in accordance with the following:

(1) Roadways shall have a minimum clear width of 12 ft (3.7 m) for each lane of travel.
(2) Turns shall be constructed with a minimum radius of 100 ft (30.5 m) to the centerline.
(3) The maximum sustained grade shall not exceed 8 percent.
(4) All cut-and-fill slopes shall be stable for the soil involved.
(5) Bridges, culverts, or grade dips shall be provided at all drainageway crossings; roadside ditches shall be deep enough to provide drainage with special drainage facilities (tile, etc.) at all seep areas and high water-table areas.
(6) The surface shall be treated as required for year-round travel.
(7) Erosion control measures shall be used as needed to protect road ditches, cross drains, and cut-and-fill slopes.
(8)*Where turnarounds are utilized during fire-fighting operations, they shall be designed with a diameter of 120 ft (36.5 m) or larger, as required, to accommodate the equipment of the responding fire department.
(9) Load-carrying capacity shall be adequate to carry the maximum vehicle load expected.
(10) The road shall be suitable for all-weather use.
(11) When a bridge is required to be used as part of a fire department access road, it shall be constructed and maintained in accordance with nationally recognized standards. [**1:**18.2.3.4.5.1]
(12) The bridge shall be designed for a live load sufficient to carry the imposed loads of fire apparatus. [**1:**18.2.3.4.5.2]
(13) Vehicle load limits shall be posted at both entrances to bridges where required by the AHJ. [**1:**18.2.3.4.5.3]

7.6 Mobile Water Supply Training. To promote operational safety and effectiveness, the AHJ shall determine what training is required. *(See C.10.)*

7.7 Records.

7.7.1 A record of each water supply shall be prepared and periodically updated.

7.7.2 The records shall be retained in accordance with the record retention policy of the jurisdiction or state.

7.7.3 Records developed to meet the requirements of this standard shall be retained for a minimum of 3 years after the agreement, facility, or equipment is no longer used for its original purpose.

Chapter 8 Dry Hydrants

8.1* General. The AHJ shall ensure that generally accepted design practices are employed during the following:

(1) Dry hydrant location planning
(2) The permit process
(3) Design criteria
(4) Construction

8.2 Planning and Permits. The planning, permitting, and design processes shall be completed before the actual construction begins.

8.2.1 Planning shall be coordinated among public and private entities that could be impacted by the installation of a dry hydrant.

8.2.2* Required permits to install a dry hydrant shall be obtained prior to installation.

8.3* Dry Hydrant Design and Location.

8.3.1* The AHJ shall approve all aspects of the dry hydrant design and construction, including the type of materials, pipe size, and system fittings to be used.

Documents
Document Sharing Hub
Full document details: NFPA 1142 2012

8.3.2* As a minimum, Schedule 40 pipe and component fittings shall be used.

8.3.3* All dry hydrant systems shall be designed and constructed to provide a minimum flow of 1000 gpm (3800 L/min) at draft.

8.3.4* The water supply source for the dry hydrant shall provide, on a year-round basis, the required quantity of water, as determined in Chapter 4, and the minimum flow as required in 8.3.3.

8.3.5* Dry hydrant systems shall be designed and constructed so that slope and piping configurations do not impede drafting capability.

8.3.6* All exposed surfaces and all underground metal surfaces shall be protected to prevent deterioration.

8.3.7* A minimum number of elbows shall be used in the piping system.

8.3.8 Suction hose connection(s) shall be compatible with the fire department's hard suction hose size and shall conform to NFPA 1963, *Standard for Fire Hose Connections*. The connection(s) shall include a protective cap. The cap and adapter shall be of materials that minimize rust and galvanic corrosion.

8.3.9 Dry hydrant system piping shall be supported and/or stabilized using approved engineering design practices.

8.3.10 Stabilization or equivalent protection shall be employed at elbows and other system stress points.

8.3.11 In addition to strength of materials and structural support criteria, design shall specify appropriate aggregates and soil materials to be used to backfill/cover piping during installation.

8.3.12 All connections shall be clean, and the appropriate sealing materials shall be used according to manufacturer's specifications so as to ensure that all joints are airtight.

8.3.13* System strainers shall be constructed to permit required fire flow.

8.4* Dry Hydrant Locations.

8.4.1 A minimum of 3 ft (0.9144 m) shall be provided around the dry hydrant.

8.4.2* Dry hydrants shall be located so that they are accessible under all weather conditions.

8.4.3 The dry hydrant system and access to the site shall be developed in a manner that allows the fire department pump to connect to the hydrant using not more than 20 ft (6 m) of hard suction hose.

8.4.4 Dry hydrants shall be located a minimum of 100 ft (30 m) from any structure.

8.4.5 No parking or other obstacles shall be allowed within 20 ft (6 m) of the access side of the hydrant.

8.4.6* Dry hydrants shall be protected from damage by vehicular and other perils, including freezing and damage from ice and other objects.

8.4.7* Dry hydrant locations shall be made visible from the main roadway during emergencies by reflective marking and signage approved by the AHJ.

8.4.8 All identification signs shall be approved by the highway authority prior to installation if they are to be located on the right-of-way or are subject to state laws.

8.5* Depth of Water Sources.

8.5.1 There shall be not less than 2 ft (0.6 m) of water above the strainer and not less than 1 ft (0.3 m) below the strainer.

8.5.2 Depth of the water shall be based on the 50-year drought level for the water source.

8.6* Installation Procedure for Dry Hydrant System. The AHJ shall ensure that the installation meets all design criteria.

8.7 Inspection and Maintenance of Dry Hydrants.

8.7.1* Dry hydrants shall be inspected at least quarterly and maintained as necessary to keep them in good operating condition.

8.7.2 Thorough surveys shall be conducted, to reveal any deterioration in the water supply situation in ponds, streams, or cisterns.

8.7.3 Grass, brush, and other vegetation shall be kept trimmed and neat. Vegetation shall be cleared for a minimum 3 ft (0.9 m) radius from around hydrants.

8.7.4 The hydrants shall be marked, as needed, with reflective material to enhance their visibility during emergencies, in accordance with 8.4.7.

8.7.5 Hydrant risers shall be protected from ultraviolet (UV) degradation by painting or other measures.

8.7.6* The hydrants shall be flow tested at least annually with a fire department pump to ensure that the minimum design flow is maintained.

8.8* Records for Dry Hydrants. The AHJ shall maintain, in a safe location, maps and records of each dry hydrant installation and the subsequent tests, inspections, maintenance, and repairs to the dry hydrant.

Annex A Explanatory Material

Annex A is not a part of the requirements of this NFPA document but is included for informational purposes only. This annex contains explanatory material, numbered to correspond with the applicable text paragraphs.

A.1.2 In some areas, water supply systems have been installed for domestic water purposes only. These systems could be equipped with hydrants that might not have the volume, pressure, and duration of flow needed for adequate fire-fighting purposes. Where such conditions exist, this standard and annex should be applied in water supply matters.

A.1.3.2 Locations such as these require individual evaluations to determine the minimum water supply to protect the hazards present.

A.3.2.1 Approved. The National Fire Protection Association does not approve, inspect, or certify any installations, procedures, equipment, or materials; nor does it approve or evaluate testing laboratories. In determining the acceptability of installations, procedures, equipment, or materials, the authority having jurisdiction may base acceptance on compliance with NFPA or other appropriate standards. In the absence of such standards, said authority may require evidence of proper installation, procedure, or use. The authority having jurisdiction may also refer to the listings or labeling practices of an organization that is concerned with product evaluations and is

AVA Documents Document Sharing Hub
Full document details: NFPA 1142 2012

thus in a position to determine compliance with appropriate standards for the current production of listed items.

A.3.2.2 Authority Having Jurisdiction (AHJ). The phrase "authority having jurisdiction," or its acronym AHJ, is used in NFPA documents in a broad manner, since jurisdictions and approval agencies vary, as do their responsibilities. Where public safety is primary, the authority having jurisdiction may be a federal, state, local, or other regional department or individual such as a fire chief; fire marshal; chief of a fire prevention bureau, labor department, or health department; building official; electrical inspector; or others having statutory authority. For insurance purposes, an insurance inspection department, rating bureau, or other insurance company representative may be the authority having jurisdiction. In many circumstances, the property owner or his or her designated agent assumes the role of the authority having jurisdiction; at government installations, the commanding officer or departmental official may be the authority having jurisdiction.

A.3.3.10 Exposure Hazard. If a structure is a Class 3 or Class 4 occupancy hazard, it is an exposure hazard if within 50 ft (15.24 m) of another building, regardless of size.

A.3.3.11 Fire Department. The AHJ and the fire department having jurisdiction can be the same agency. The term *fire department* includes any public, governmental, private, industrial, tribal, or military organization engaging in this type of activity.

A.3.3.12 Large Diameter Hose. Supply hose is designed to be used at operating pressures not exceeding 185 psi (1275 kPa). Attack hose is designed for use at operating pressures up to at least 275 psi (1895 kPa).

A.3.3.17 Mutual Aid/Assistance Agreement. Often the request for such aid to be rendered comes only after an initial response has been made and the emergency incident status has been determined.

A.3.3.22 Suburb or Suburban. Suburban areas can include populous towns or large villages or be located outside the official limits of a densely settled city of 2500 to 50,000 people per census block, or those areas that interface with the outer rim of an urban cluster (UC). Suburban communities usually exist within commuting distance of urban areas but exhibit their own jurisdictional autonomy.

A.3.3.24 Water Supply Officer (WSO). Many progressive rural fire departments depend on a water supply officer (WSO). The WSO is the individual who implements the water supply pre-fire planning. The work of a properly trained and equipped WSO makes it possible for the officer supervising the actual fire attack to operate on the basis of reliable water supply information, to coordinate the attack with the available water supplies, and to avoid diverting his or her attention from the attack to the logistics of backing it up with an adequate water supply.

The WSO's overall responsibilities are to determine water supply requirements of the targeted structures, to plan availability of and access to water sources, and to ensure sufficient water is provided at each fire site. The WSO should maintain and have available a complete set of files, including locations of water sources and lists of available automatic and mutual aid mobile water supply apparatus. Modern technology in computers makes it feasible for even a relatively low-budget department to reduce this data to electronic files that can be maintained at the fire alarm communication center and provided at the scene of every fire.

The WSO participates in the pre-fire planning and in calculating the water supply requirements for the various buildings in the area under the department's jurisdiction. To satisfy these water supply requirements, the WSO should survey the district and the surrounding areas for available water for firefighting purposes. Water supplies might exist on the property to be protected or might need to be transported. The WSO should develop preplans and see that the fire department is kept aware of all the water supplies available to the entire area. The WSO maintains close coordination with the fire department training officer and provides assistance in joint water supply training sessions with neighboring fire departments. The WSO should make periodic inspections of all water supplies and structural changes in the department's jurisdiction.

A list of all apparatus, equipment, and personnel available to the WSO's department should be developed. Arrangements should be developed for specific apparatus and personnel to respond under an automatic aid agreement (first alarm response) or a mutual aid agreement (called as needed). Needs will be dictated by the nature of the structure(s) involved and the quantity of water required.

At the fire scene, the WSO's duty is to maintain continuous fire streams by establishing several water-hauling facilities, assembling water-carrying equipment of automatic and mutual aid departments, and calculating estimated arrival times of mobile water supply apparatus, through a thorough knowledge of available water supplies throughout a wide area of fire department jurisdiction.

Developing and sustaining large fire flow requires the use of several water sources as well as several drop tanks where water can be dumped. Therefore, reliable and effective communication is necessary in directing mobile water supplies so that time is not lost at the fill and the dump points. To obtain water supply efficiency, a radio frequency separate from that used for the fireground operations should be assigned to the WSO and the water supply site and the mobile water supply apparatus. The WSO will also require efficient communication with the incident commander.

The WSO (or designee) meets with property owners and others to secure their permission to use the water supply, to develop an all-weather road to the supply, and to install dry hydrants. The installation of roads to, or dry hydrants in, navigable water or wetlands might require a permit from appropriate local, state, or national agencies. The WSO should also consult with the owner in the design of a water source on a property to be protected.

A.4.1.2 Information needed to compute the minimum water supplies that should be collected during building surveys includes the following:

(1) Area of all floors, including attics, basements, and crawl spaces
(2) Height between floors or crawl spaces and in the attics from floor to ridgepole
(3) Construction materials used in each building, including walls, floors, roofs, ceilings, interior partitions, stairs, and so forth
(4) Occupancy(ies) of buildings
(5) Exposures to the structure from other buildings or yard storage and separation distances
(6) Fire protection systems — automatic and manual protection systems, hydrants, yard mains, and other protection facilities
(7) On-premises water supplies, including natural and constructed sources of water

Documents
Document Sharing Hub
Full document details: NFPA 1142 2012

A.4.1.3 The water supply for fire-fighting purposes, as specified in Chapter 4, is considered the minimum water supply. The AHJ could determine that a municipal-type water supply is warranted (*see Annex G*). This determination might be made as a result of on-site survey of buildings by the fire department having jurisdiction or by review of architectural plans of proposed construction and planned development.

A.4.2.1 Annex H provides tables with precalculated minimum water supplies by occupancy hazard and construction classification where no exposures are present.

A.4.3.1 See Annex H for sample calculations for structures with exposure hazards.

A.4.4 See NFPA 1, *Fire Code*, Section 18.4 for information on permitted reductions of fire flow and other fire flow provisions.

A.5.2 The occupancy hazard classification number is a mathematical factor to be used in calculating minimum water supplies. The lowest occupancy hazard classification number is 3, and it is assigned to the highest hazard group. The highest occupancy hazard classification number is 7, and it is assigned to the lowest hazard group.

A.5.2.1.1 In severe hazard occupancies, the quantity or combustibility of contents is expected to develop very high rates of spread and heat release.

A.5.2.2.1 In high hazard occupancies, the quantity or combustibility of contents is expected to develop high rates of spread and heat release.

A.6.2 The construction classification number is a mathematical factor to be used in calculating minimum water supplies. The slowest burning or lowest hazard type of construction, fire-resistive, is construction classification 0.5. The fastest burning or highest hazard type of construction, wood frame, is construction classification 1.5.

A.6.3.1 The types of construction include five basic types designated by roman numerals as Type I, Type II, Type III, Type IV, and Type V. This system of designating types of construction also includes a specific breakdown of the types of construction through the use of arabic numbers. These numbers follow the roman numeral notation where identifying a type of construction (e.g., Type I-442, Type II-111, Type III-200).

The arabic numbers following each basic type of construction (e.g., Type I, Type II) indicate the fire resistance rating requirements for certain structural elements as follows:

(1) First arabic number: Exterior bearing walls
(2) Second arabic number: Columns, beams, girders, trusses and arches, supporting bearing walls, columns, or loads from more than one floor
(3) Third arabic number: Floor construction

Specific fire resistance ratings are found in Table 6.3.1, and additional information is found in NFPA 20, *Standard for the Installation of Stationary Pumps for Fire Protection*.

A.7.1.1 Although most water is acceptable for fire-fighting purposes, there might be suspended particulates or contaminants that could prove harmful to the fire pump systems or fire-fighting agents being used and should be avoided.

A.7.1.5 For a supply flowing from a stream, the quantity to be considered available is the minimum rate of flow [at not over 15 ft (4.5 m) total lift] during a drought having an average 50-year (2.0 percent chance) recurrence interval. A minimum flow rate of 250 gpm (950 L/min) without interruption for 2 hours as determined by a registered/licensed professional engineer, hydrologist, or similarly qualified person is considered a dependable supply. The maximum rate of flow is determined by testing using the pumpers(s), hose arrangement, and dry hydrant normally used at the site.

Historical stream flow data are available for most streams from the *United States Geological Survey (USGS) Water Resources Information*. These data can also be accessed at http://waterdata.usgs.gov/nwis/sw/. The USGS does not establish flow rates but provides historical data to assist with assessment. Additional assistance is available from individual state and organization contacts at the National Drought Mitigation Center (NDMC). *The National Drought Mitigation Center Directory of Drought Contacts* can be accessed from their home page at http://www.drought.unl.edu/index.htm.

For an impounded supply, cistern, tank, or storage facility, the quantity to be considered available is the minimum available [at not over 15 ft (4.5 m) total lift] during a drought having an average 50-year (2.0 percent chance) recurrence interval. A minimum of 30,000 gal (113,560 L) (1.1 acre-in.) of pumpable impoundment water or a minimum rate of 250 gpm (950 L/min) without interruption for 2 hours (certified by a registered/licensed professional engineer, hydrologist, or similarly qualified person) is considered a dependable supply. The maximum rate of flow should be determined by testing using the pumpers(s), hose arrangement, and dry hydrant normally used at the site.

The Natural Resources Conservation Service (NRCS) provides *Conservation Practice Standard Dry Hydrant Code 432*, which can be of assistance in determining appropriate drought levels in some states. Conservation practice specifications are detailed requirements for installing the practice in the state. They are localized so that they apply specifically to the geographic area for which they are prepared. Practice standards define the practice where the requirement applies and for installing the practice in the state. These documents are referred to as Field Office Technical Guides (FOTGs). These data can be accessed from the NRCS website at http://www.nrcs.usda.gov/technical/efotg.

A.7.2 During pre-fire planning, the fire department should make arrangements with the owners of water supplies to use the water during an emergency. Such agreements should be made in writing in close cooperation with legal counsel.

The agreements should identify who will build, service, and maintain necessary access roads to the supplies, including such functions as snow plowing in certain areas of the country. Figure A.7.2 shows a sample water usage agreement.

A.7.5 Most artificial lakes are constructed with heavy earth-moving equipment. In order for the property owner to construct a roadway for fire department use, the AHJ should make the property owner aware of the needs of the fire department while the heavy equipment is still on the job.

Accessibility should always be considered. Many recreational lakes are provided with access by roads, driveways, and boat-launching ramps and are available for fire department use. Some large lakes, formed by a dam on a river, might have been constructed for such purposes as to generate power, for flood control, or to regulate the flow of a river. During certain periods of the year (droughts, drawdowns, etc.), such bodies of water can have very low water levels. The water under such conditions might not be accessible to the fire department for drafting by the fire department pumping unit, even where a paved road for boat launching has been provided and extended into the water at normal water levels for several feet or meters. Under such conditions, other provisions should be made to make the water supply fully accessible to the fire department.

AVA Documents 2012 Edition NFPA Document Sharing Hub

Full document details: NFPA 1142 2012

SAMPLE WATER USAGE AGREEMENT

It is understood by the owner(s) and the _____ government (hereinafter called the _____or _____ Fire Department) that this agreement is subject to the following conditions:

1. The owner(s) are permitted to terminate this agreement by written notice if the _____ Fire Department breaches any terms and conditions contained in this agreement.
2. Neither this agreement nor any right or duty in whole or in part by the owner(s) under the agreement will be assigned, delegated, or subcontracted without the written consent of the owner(s).
3. All items placed on the property of the owner(s) by the _____ will remain the property of the _____ . If this agreement is terminated, the owner(s) will permit the _____ adequate time to remove said property and return the land to its natural state.
4. Any and all debris that is created by and during the establishment of the drafting site will be disposed of by the _____ .
5. No cutting or trimming of trees will be done on the property of the owner(s) unless the _____ Fire Department states that such cutting is/will be necessary to provide uninterrupted and clear travel to the site; however, in no case will such cutting be actually completed without prior approval of the owner(s).
6. The _____ will maintain the area covered by this agreement in a safe condition at all times. This maintenance will also include the groundskeeping around the site.
7. The _____ agrees to save, keep harmless, defend, and indemnify the owner(s) and all its officers, employees, and agents, against any and all liability claims, costs of whatever kind and nature, for injury and death of any person or persons, and for loss or damage to any property occurring in connection with or in any way incidental to or arising out of the occupancy, use, service, operation, or performance of work in connection with this agreement or omissions of the _____ 's employees, agents, or representatives. THIS PROVISO DOES NOT AND WILL NOT APPLY TO ANY EVENTS INVOLVING AN ACTUAL FIRE IN THE STRUCTURE(S) OF THE OWNER(S).
8. The owner(s) as well as any heirs, executors, administrators, and assigns do hereby remise, release, and forever discharge the _____ and any officer, agent, or employee thereof of any liability at law to any person, firm, or legal entity for any act of omission, or any injuries, damages, or deaths claimed to have arisen from the [describe the work to be performed at the site] unless the act of omission amounts to willful misconduct. This waiver is entered into for and in consideration of the drafting site and access roadway. The sufficiency of this consideration is acknowledged by the owner's(s') signature(s) below.
9. The owner(s) grant the rights to the _____ and _____ Fire Department to enter the property cited in this agreement only for the express purpose as stated by owner(s).

_____ (Owner)	_____ (_____ Fire Dept.)
_____ (Owner)	_____ (_____ Road Supt.)
_____ (Date)	_____ (Head of local government)
	_____ [Attorney (ies)]

© 2011 National Fire Protection Association NFPA 1142

FIGURE A.7.2 Sample Water Usage Agreement.

Documents
Document Sharing Hub
Full document details: NFPA 1142 2012

A.7.5(8) Where a 120 ft (36.5 m) diameter turnaround or other means for the mobile water supply apparatus to exit the water supply location is not feasible, a large underground pipe transmission line can be laid from the water supply to the highway and the mobile water supply apparatus filled on the highway right-of-way. However, a turnaround or looped facility could still be needed if the mobile water supply apparatus needs to return to the fire scene over the same roads used to reach the water supply site.

A.8.1 Factors to consider when determining the need and location for a dry hydrant system should include, but not be limited to, the following:

(1) Current and future population and building trends
(2) Property values protected
(3) Potential for loss
(4) Proximity to structures [e.g., not closer than 100 ft (30 m) from a structure it is designed to protect]
(5) Fire history of the area protected
(6) Current water supply systems
(7) Potential water supply sources and reliability (i.e., constructed or natural)
(8) Cost of project
(9) Other factors of local concern

The Volunteer Fire Assistance program provides grants to rural fire departments for training, organizing, and equipment serving communities with a population of 10,000 or less. The U.S. Forest Service sponsors and funds this program, which is delivered by the State Forester in each state.

Grants may be available through the State Forester's office on a cost-sharing basis. It is appropriate to seek funding from the Volunteer Fire Assistance program for material for dry hydrants since rural fire departments provide much of the initial attack on wildland fires. More information about the Volunteer Fire Assistance program can be found on the USDA Forest Service website at www.fs.fed.us/fire/partners/vfa/. Click on VFA Desk Guide. Contact your local State Forester's office for application procedures. The name and contact information for State Foresters can be found on the National Association of State Foresters website at www.stateforesters.org/SFlist.html, or you can view the homepage at www.stateforesters.org.

A.8.2.2 Permits to install a dry hydrant should be obtained from the AHJ. These can include local, state, and federal agencies charged with fire protection, zoning, water, environmental protection, agriculture and resource conservation, among others.

A.8.3 Since there might be resources available to assist in the planning and installation of dry hydrants, it is desirable to identify and consult with the persons responsible for those resources early in the process.

A.8.3.1 Factors including local topography, climatic conditions, and access to materials will determine the design characteristics of each installation. Distance to the water combined with the difference in elevation between the hydrant head and the water source, and the desired flow, in gpm (L/min) will affect the pipe size that should be used.

Local preferences and experience, along with access to materials, will determine the type of pipe and fittings best suited for the job. In some parts of the country, brass and bronze caps and suction hose connections, along with iron, steel, and bituminous cement pipe and fittings, are being used for dry hydrant installations.

A.8.3.2 Many fire service hose appliance manufacturers now offer pre-manufactured and pre-assembled PVC suction screens, hydrant heads, and supports that come ready to attach to the pipe *[see Figure A.8.3.2(a)]*.

Figure A.8.3.2(b) is an example of a dry hydrant installation showing a minimum 6 in. (150 mm) pipe and screen. Installations can involve larger pipes and screens.

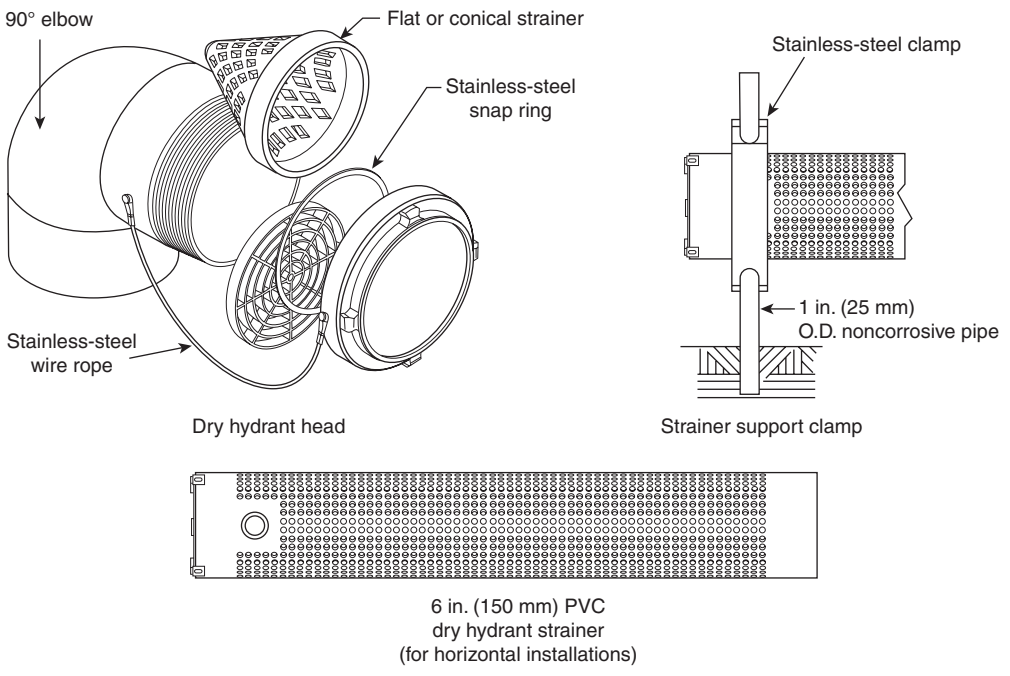

FIGURE A.8.3.2(a) Commercially Available Dry Hydrant Components.

AVA Documents Document Sharing Hub
Full document details: NFPA 1142 2012

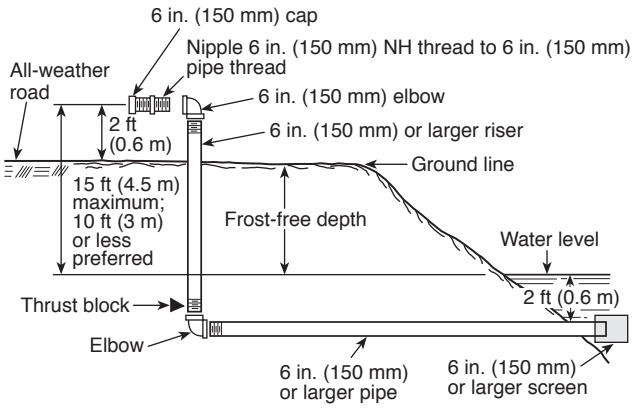

FIGURE A.8.3.2(b) Exploded View of Dry Hydrant Construction.

A.8.3.3 System design requirements should allow for required fire flow, atmospheric pressure, lift, vapor pressure, length of required pipe run, coefficient of materials (C factor), piping configuration, and other design factors that approved engineering practices would necessitate.

The following are some factors that should be considered when a dry hydrant system is designed:

(1) Lift should be as low as possible and not exceed 10 ft to 12 ft (3.1 m to 3.7 m), if possible. This loss cannot be overcome by enlarging the pipe size.
(2) Total head loss should not exceed 20 ft (6.1 m), or the pump might not supply its rated gpm (L/min). If the fire department will be using portable pumps on the dry hydrant, those pumps generally have less capability to create a vacuum and head loss needs to be as low as possible.

A.8.3.4 The required flow at the dry hydrant can exceed the delivery flow shown in Chapter 4 to allow for rapidly filling mobile water supply fire apparatus.

A.8.3.5 See Annex I for information on dry hydrant design.

Figure A.8.3.5 shows a typical dry hydrant installation where freezing is not a concern. During seasonal droughts, more of the pipe will be empty, requiring the primer on the pump to be operated longer before water reaches the pump.

A.8.3.6 Metal piping and exposed PVC pipe surfaces should be primed and painted to prevent deterioration.

A.8.3.7 Preferably no more than two 90-degree elbows should be used. It might be desirable to have a wide-sweep elbow [using two 45-degree elbows and a 2 ft (0.6 m) length of pipe] installed at the bottom of the riser where the lateral run connects. In the event of a broken-off hydrant connection, this could permit sections of 2½ in. (65 mm) suction hose to be inserted down the 6 in. (150 mm) pipe to the water and would permit drafting to continue, although at a much reduced rate of flow.

A.8.3.13 Strainers or screens have been locally fabricated by drilling sufficient ⅜ in. (10 mm) holes in a length of pipe to equal 4 times the cross-sectional area of the pipe and capping the end with a removable or hinged cover. Remember to leave a solid strip of pipe approximately 4 in. to 5 in. (100 mm to 125 mm) wide along the top to act as a baffle to prevent whirlpooling during periods of low water.

A.8.4 Each dry hydrant site should be evaluated by the fire department to determine the best way, within the fire department's means, for using the water supply. Figure A.8.4(a) and Figure A.8.4(b) show two examples of how dry hydrant installations can be adapted to support the water supply needs of the fire department for specific situations.

A.8.4.2 It is the responsibility of the AHJ to make inspections of all water sources as often as conditions warrant to note any changes and take appropriate action. This is particularly true during adverse weather conditions, such as droughts, very wet periods, heavy freezing, and following snowstorms.

A.8.4.6 In areas where frost is a problem, the design should ensure that no frost will reach the water in the pipe. One method of preventing the frost from reaching the water in the pipe is to bury the pipe below the frost line and mound up the soil over the pipe and around the riser. Another method is to place an insulating barrier, such as Styrofoam, between the pipe and the surface as shown in Figure A.8.4.6(a) to prevent the frost from reaching the water in the pipe.

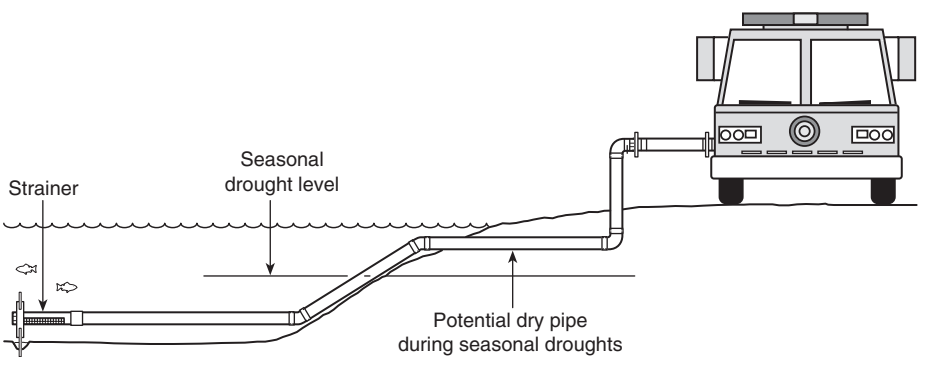

FIGURE A.8.3.5 Typical Dry Hydrant Installation Showing Impact of Seasonal Drought.

Documents
Document Sharing Hub
Full document details: NFPA 1142 2012

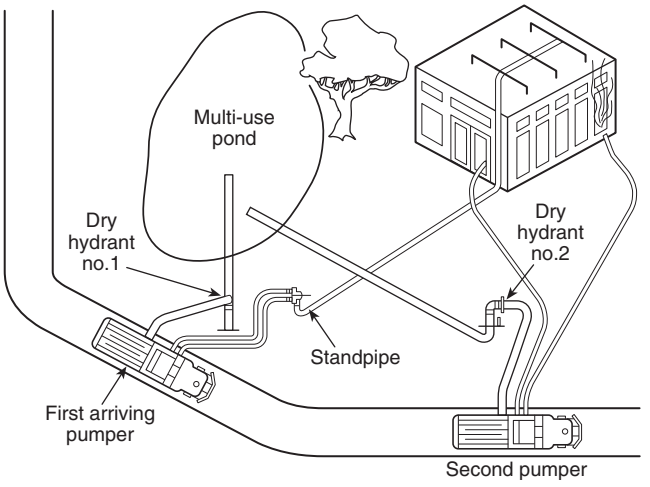

FIGURE A.8.4(a) Multiple Water Supply Points for an Industrial Occupancy.

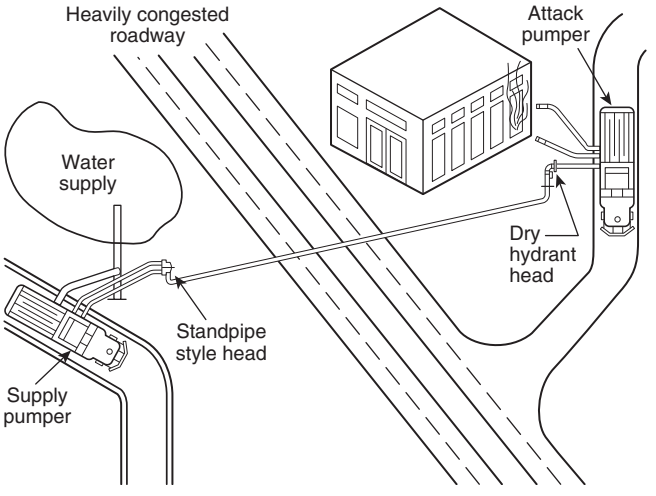

FIGURE A.8.4(b) Overcoming Roadway Obstructions in Supplying Water to a Building.

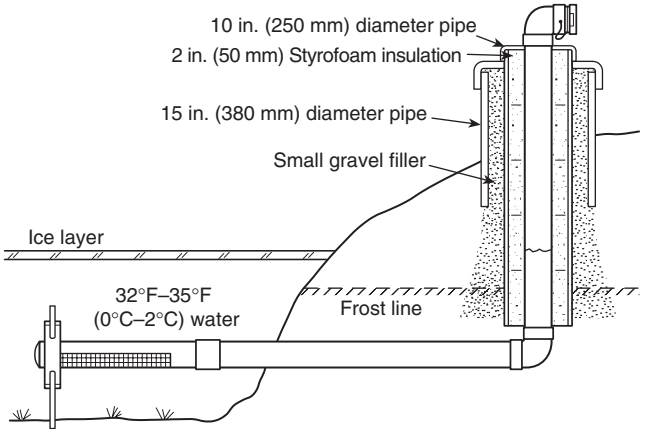

FIGURE A.8.4.6(a) Example of Freeze Protection for Dry Hydrant Subject to Severe Freezing Conditions.

A third method is to inject air into the hydrant and displace the water to prevent freezing. With the water displaced below the frost line, the hydrant is usable year-round. This method requires an air pressure gauge and air chuck to be installed in the cap of the hydrant by drilling and tapping into the metal. *[See Figure A.8.4.6(b).]* The air pressure gauge should read from 0 psi to 10 psi (0 kPa to 69 kPa), as it is important to be able to accurately monitor the air pressure. In most cases, the air pressure will not read over 5 psi to 6 psi (34 kPa to 41 kPa). If there is a chain for the hydrant cap, it should be removed. Teflon® tape is applied to the threads of the gauge and air chuck.

Air is injected into the hydrant until it bubbles out of the suction screen or the air pressure gauge no longer rises. *[See Figure A.8.4.6(c).]* This low-pressure air should not cause a safety problem, but all personnel should be advised to remove the hydrant cap slowly to prevent any possible injury. The air pressure gauge should be checked periodically to be sure the water remains displaced in the hydrant. This method requires periodic repressurization. Also, if damage has occurred to cause loss of air pressure, freezing and blockage can occur immediately, making the system unusable in an emergency. The advantage of this method is that if the air chuck or gauge is damaged, it will not affect the airtight integrity of the hydrant while drafting, because the cap is removed for drafting.

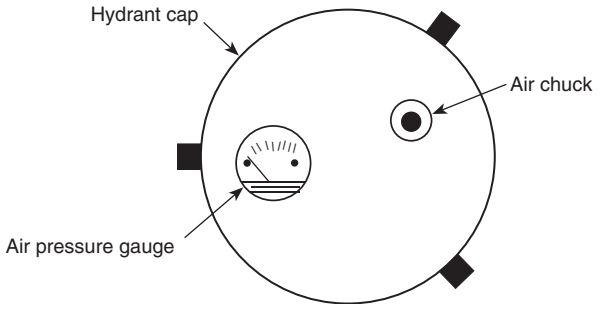

FIGURE A.8.4.6(b) Cap Design for Air Injection System.

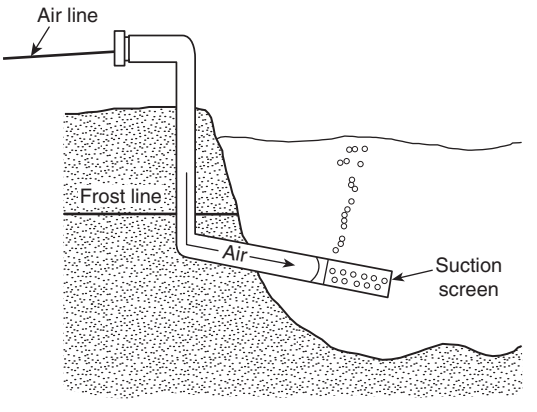

FIGURE A.8.4.6(c) Air Injection Frost-Proofing System.

Documents
Document Sharing Hub
Full document details: NFPA 1142 2012

It is important in any installation where freezing could occur that the suction screen is placed deep enough in the body of water to ensure that ice will not reach the screen. In such cases, divers might be needed to assist in proper screen placement.

A.8.4.7 The AHJ should ensure that an appropriate sign is erected at each water point identifying the site for fire department emergency use and including the name, or a number, for the water supply. Letters and numbers should be at least 3 in. (76 mm) high, with a ½ in. (13 mm) stroke, and reflective, as allowed by state and local regulations.

A.8.5 The installation of dry hydrants calls for care in measuring water storage capacities. The useful depth of a lake with a dry hydrant installation, for instance, is from the minimum foreseeable low-water surface level to the top of the suction strainer, not to the bottom of the lake, and cannot be less than 2 ft (0.6 m) of water. This becomes a very important point where hydrants are installed on a body of water affected by tide, or on a lake that is lowered to maintain the flow of a river during drought conditions, to generate power, or that freezes over. Pump suction requires submergence below the water surface of 2 ft (0.6 m) or more, depending on the rate of pumping, to prevent the formation of a vortex or whirlpool. Baffle and anti-swirl plates should be added to minimize vortex problems and allow additional water use. The vortex allows air to enter the pump, which can cause the loss of the pump prime. Therefore, pumping rates should be adjusted as the water level is lowered. This factor should be considered by the WSO when estimating the effective rate at which water can be drawn from all suction supplies.

In water sources where heavy sediment and silt could present a problem of clogged suction screens, the intake screens should be raised above the bottom. Figure A.8.5(a) and Figure A.8.5(b) show two examples of how the strainer can be kept out of mud and silt conditions.

A.8.6 A typical installation process includes the need to excavate or trench soil that might be somewhat unstable and which is often on sloping terrain. Only persons with experience and proper equipment to install underground piping should endeavor to install dry hydrant systems.

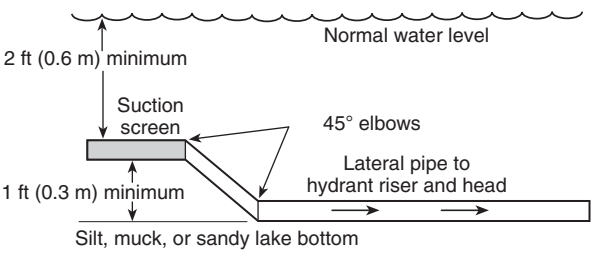

FIGURE A.8.5(a) Offset Screen Installation for Silt and Mud Conditions.

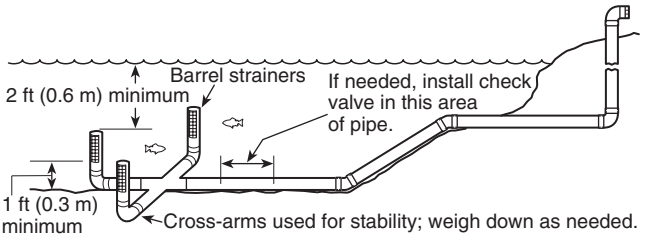

FIGURE A.8.5(b) Vertical Strainer Installation for Silt and Mud Conditions.

A.8.7.1 There could be a need for more frequent inspections due to freezing and droughts. Particular attention should be given to streams and ponds where frequent removal of debris, dredging or excavation of silt, and protection from erosion might be required.

The pond should be maintained as free of aquatic growth as possible. At times it might be necessary to drain the pond to control this growth. Helpful information is available from such sources as the county agricultural extension agent or the U.S. Department of Agriculture.

A.8.7.6 Dry hydrants can be checked and tested by actual drafting as part of the fire department training program. If the tests do not produce the design flow, the fire department should determine what the problem is. It could be necessary to back flush the system to clear leaves and other debris. When a dry hydrant is back flushed, pump pressures should not exceed 20 psi.

A.8.8 Individual records should be kept for each water source. Each water source should also be noted on a master grid map of the area in a manner that will indicate the water source record that contains the pertinent data on that water source.

The water source record should include type of source (stream, cistern, domestic system, etc.), point of access [100 ft (30.5 m) north of barn, etc.], gallons available [flows minimum 250 gpm (950 L/min), 10,000 gal (37,850 L) storage, etc.], and any particular problem such as weather condition or seasonal fluctuations that can make a source unusable. It is good practice to attach a photograph of the water point to the record.

Figure A.8.8(a) shows one way of keeping the information needed on a water source record.

A map showing the location and amount of water available at each water site should be kept at the fire alarm dispatch center, and copies should be carried on the apparatus most likely to arrive first at the scene, with additional copies in the incident commander's vehicle and the WSO's vehicle.

The water source records should be used as the basis of regular inspections to make sure the source continues to be available and to note any improvement or deterioration of its usefulness. It is suggested that a separate record of inspection and maintenance be maintained on each dry hydrant. *[See Figure A.8.8(b).]*

Documents
Document Sharing Hub
Full document details: NFPA 1142 2012